SONY

Hi-8 VIDEOCASSETTE RECORDER

EVO-9850

SERVICE MANUAL

Vol. 2

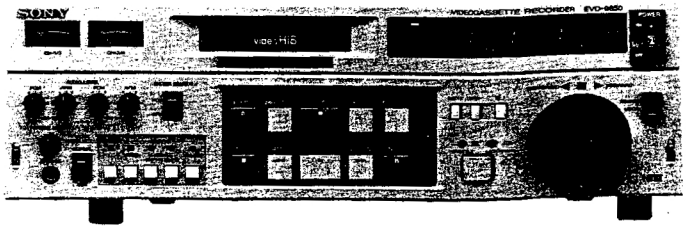

Hi8

SAFETY CHECK-OUT

After correcting the original service problem, perform the following safety checks before releasing the set to the customer :

Check the metal trim, "metallized" knobs, screws, and all other exposed metal parts for AC leakage. Check leakage as described below.

LEAKAGE TEST

The AC leakage from any exposed metal part to earth ground and from all exposed metal parts to any exposed metal part having a return to chassis, must not exceed 0.5 mA (500 microampers). Leakage current can be measured by any one of three methods.

1. A commercial leakage tester, such as the Simpson 229 or RCA WT-540A. Follow the manufacturers' instructions to use these instruments.
2. A battery-operated AC milliammeter. The Data Precision 245 digital multimeter is suitable for this job.
3. Measuring the voltage drop across a resistor by means of a VOM or battery-operated AC voltmeter. The "limit" indication is 0.75 V, so analog meters must have an accurate low-voltage scale. The Simpson 250 and Sanwa SH-63Trd are examples of a passive VOM that is suitable. Nearly all battery operated digital multimeters that have a 2 V AC range are suitable. (See Fig. A)

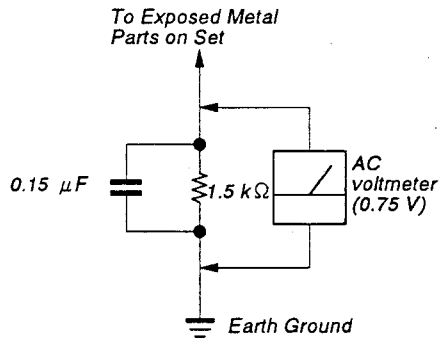

Fig. A. Using an AC voltmeter to check AC leakage.

TABLE OF CONTENTS

Volume-1

1. GENERAL DISCRIPTION

2. SERVICE INFORMATION

3. PERIODIC CHECK AND MAINTENANCE

4. REPLACEMENT OF MAJOR PART

5. TORQUE AND BACK TENSION ALIGNMENT

6. TAPE RUN ALIGNMENT

7. POWER SUPPLY ALIGNMENT

8. SERVO SYSTEM ALIGNMENT

9. AUDIO SIGNAL SYSTEM ALIGNMENT

10. VIDEO SIGNAL SYSTEM ALIGNMENT

Volume-2

11. BLOCK DIAGRAMS

OVERALL 11-1

VIDEO
REC Video Processor 11-2
PB Video Processor 11-3
Time Base Corrector 11-4
Video Interface/Sync, Burst Insert 11-5
AUDIO
AFM Audio Processor 11-6
PCM Audio Processor 11-7
SERVO & SYSTEM CONTROL
System Control 11-8
Drum/Capstan/ATF Servo Control 11-9
Reel Servo Control & Mechanism Control 11-10

12. SEMICONDUCTOR PIN ASSIGNMENTS

Semiconductor Index 12-1
IC 12-3
Transistor 12-47
Diode 12-48

13. BOASD LAYOUTS AND SCHEMATIC DIAGRAMS

Circuit Function of the Printed Circuit Board 13-1

VIDEO
MD-81 13-2
PRE-10 13-8
VRA-4 13-9
DM-87, FL-129, FI-130, FL-131, CR-40, CR-41 13-10
TBC-21 13-16
VA-111 13-22
CP-176 13-29
AUDIO
AU-156 13-30
AU-157 13-36
PD-62 13-42
AA-57 13-43
SERVO & SYSTEM CONTROL
SST-2 13-44
CN-511 13-62
RS-31, LD-1, LM-22, MS-36 13-63
KY-217, LP-52, PTC-32 13-64
DD-12, DP-101 13-66
SW-467 13-67
POWER
SOPS-1030 13-68
OTHER
MB-356 13-70
FRAME WIRING
FRAME WIRING (1/2), AC-121, CP-177, DC-57, HP-52, MT-57A, SW-466, VR-122, VR-130 13-82

FRAME WIRING (2/2)
RM-101
RM-122
SW-540 13-86
SW-543
TR-72
TS-74

14. SPARE PARTS AND FIXTURES

14-1. Parts Information 14-1
14-2. Exploded Views 14-2
Reel Table Block 14-3
Threading Ring and Tape Path Blocks 14-4
Head Drum and Threading Control Blocks 14-5
Mechanism Control Block 14-6
Cassette Up Compartment Block (1) 14-7
Cassette Up Compartment Block (2) 14-8
Function Control Chassis Block 14-9
Connector Panel Block 14-10
Main Shassis Block 14-11
Ornamental Panel Block 14-12
Card Rack Block 14-13
14-3. Electrical Parts List 14-15
14-4. Packing Materials and Accessories 14-89
14-5. Optional Fixtures 14-89

SECTION 11
BLOCK DIAGRAMS

VERALL

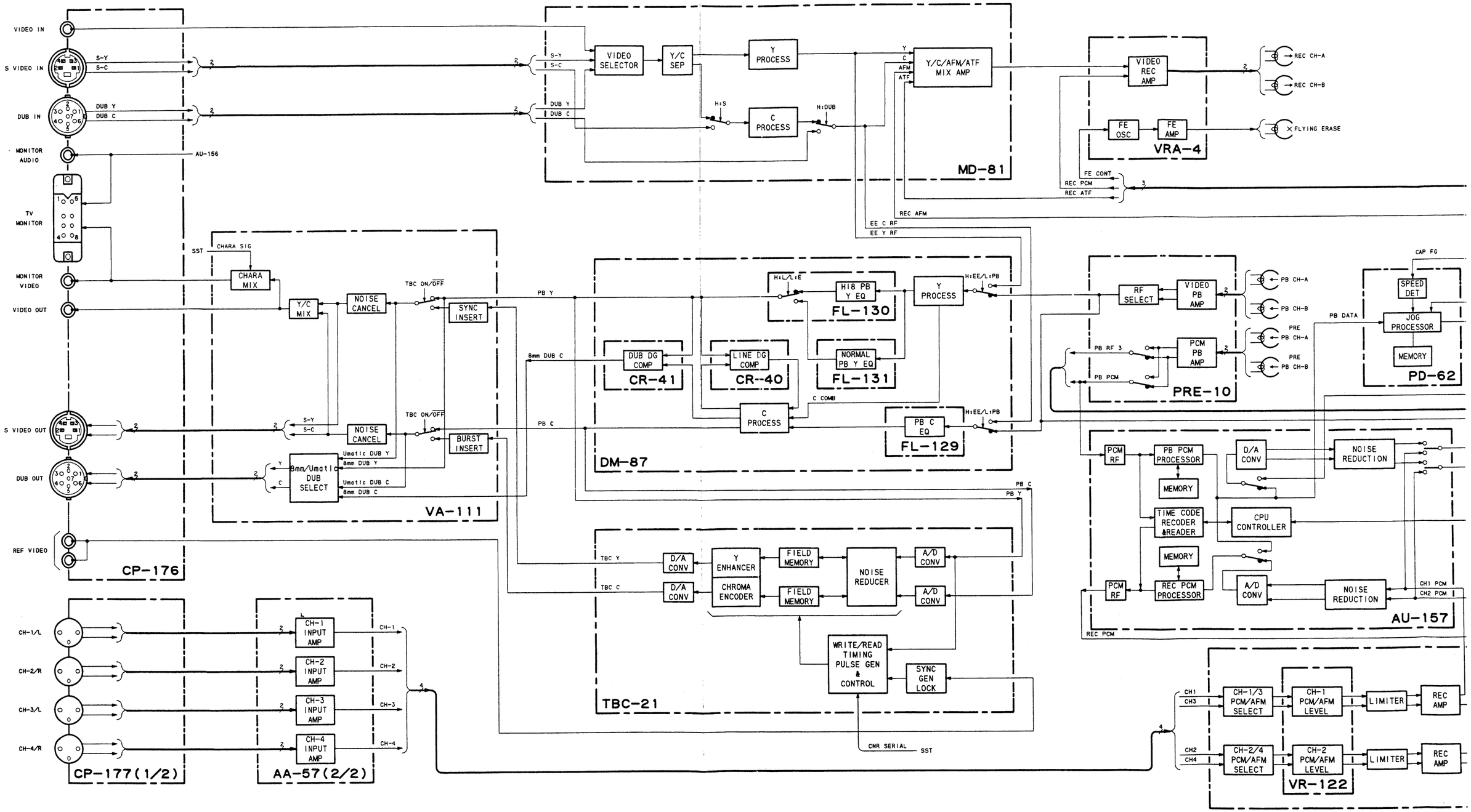

11-1

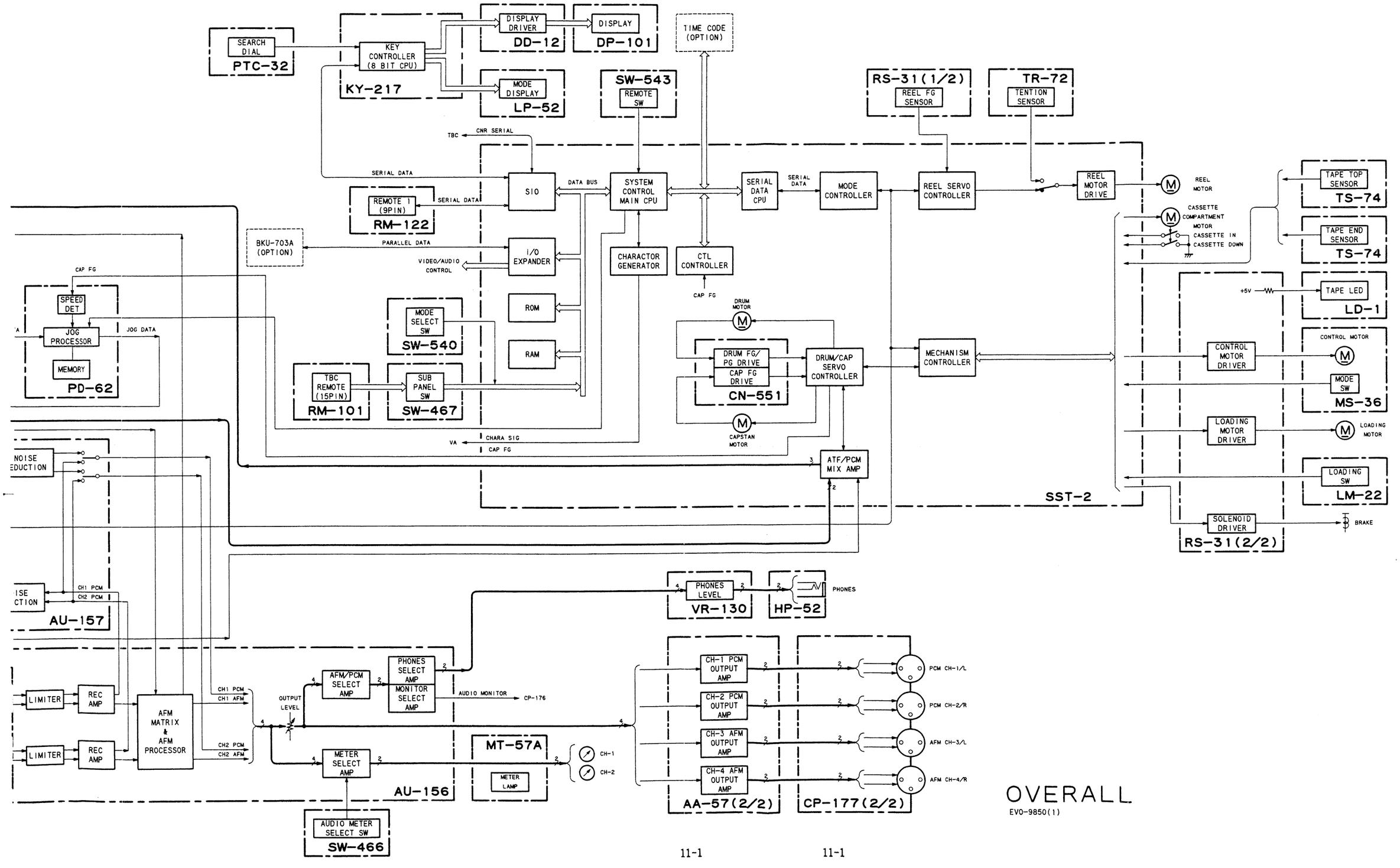

OVERALL

EVO-9850(1)

REC Video Processor

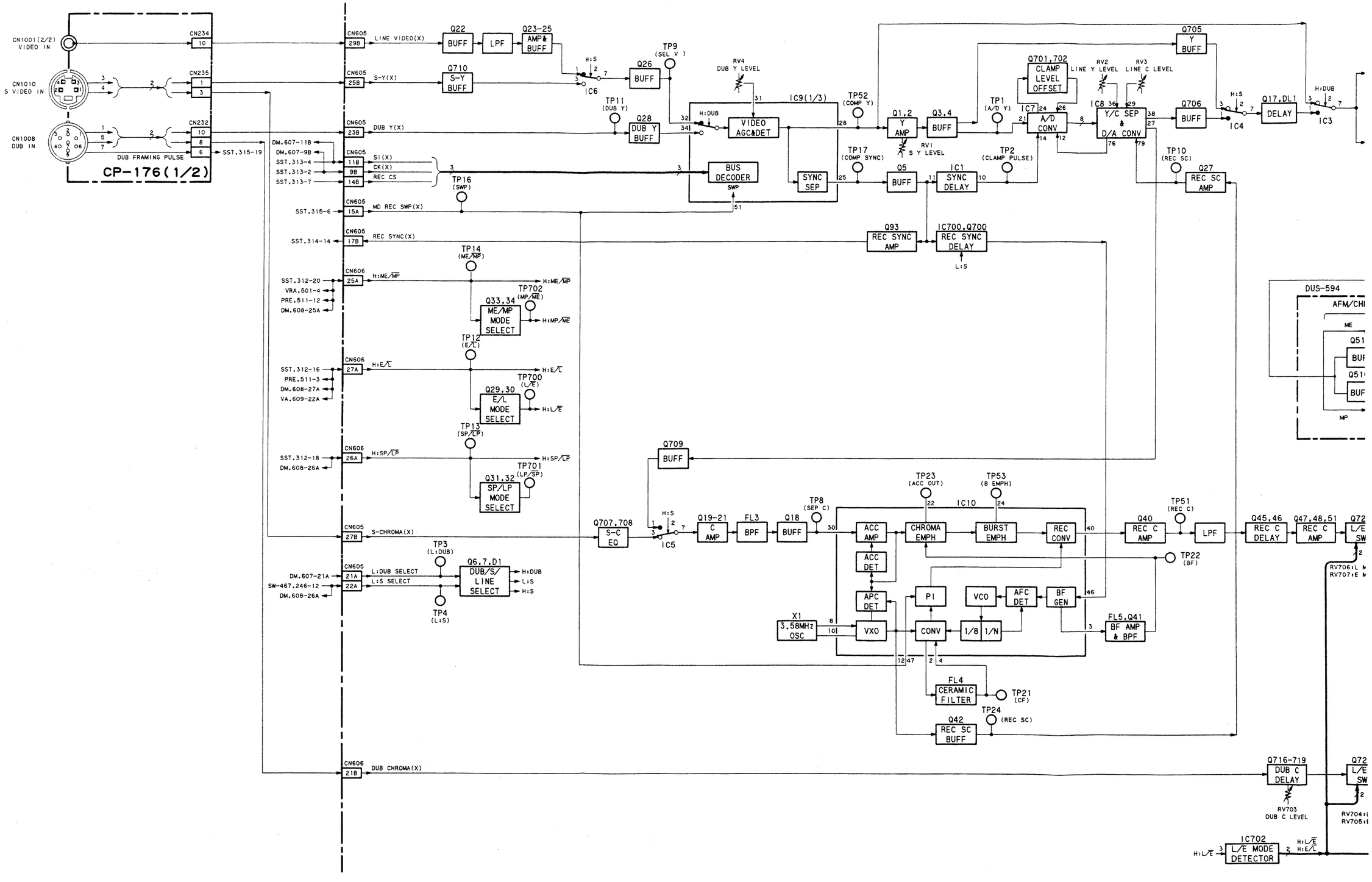

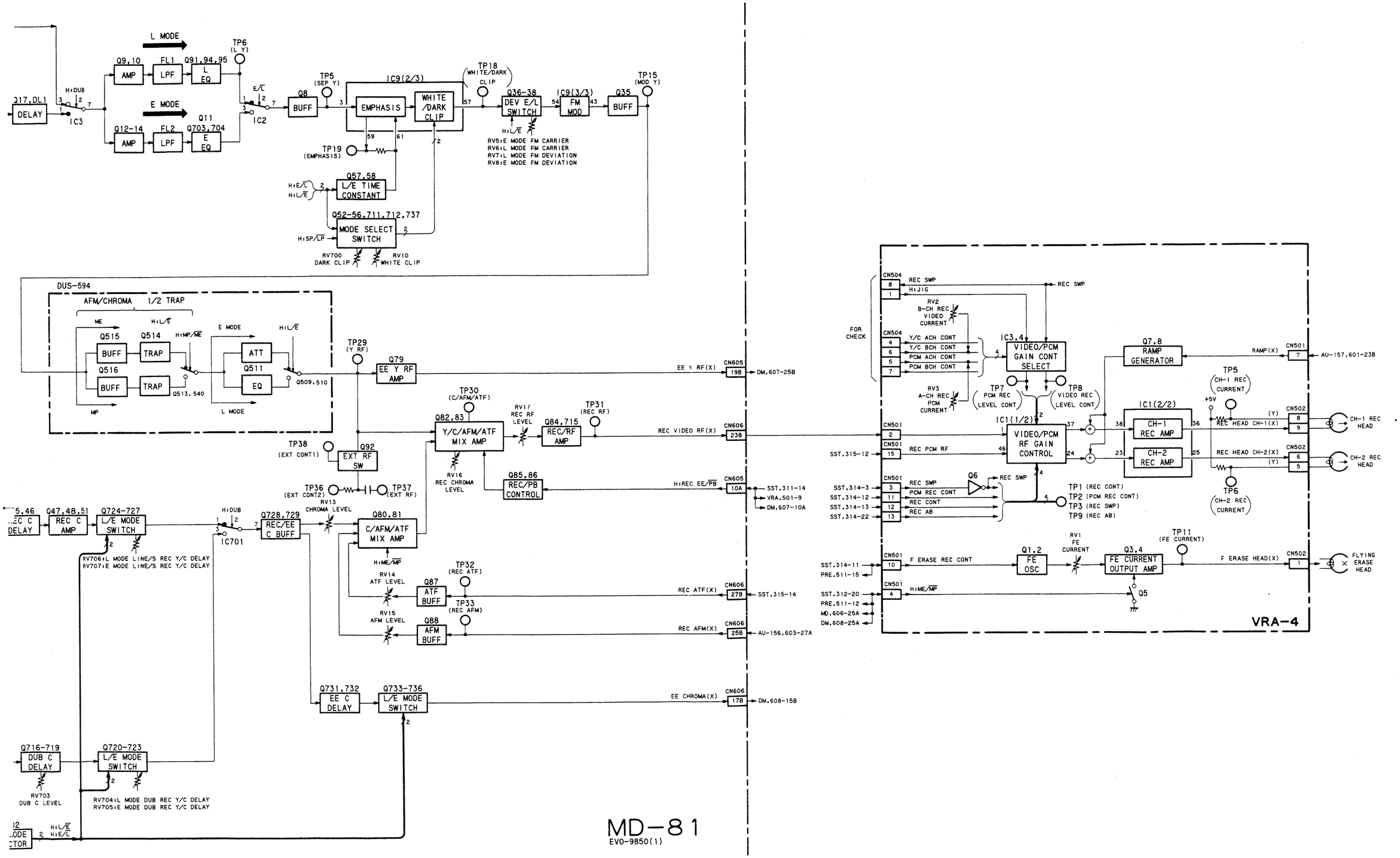

MD-81
EVO-9850(1)

'B Video Processor

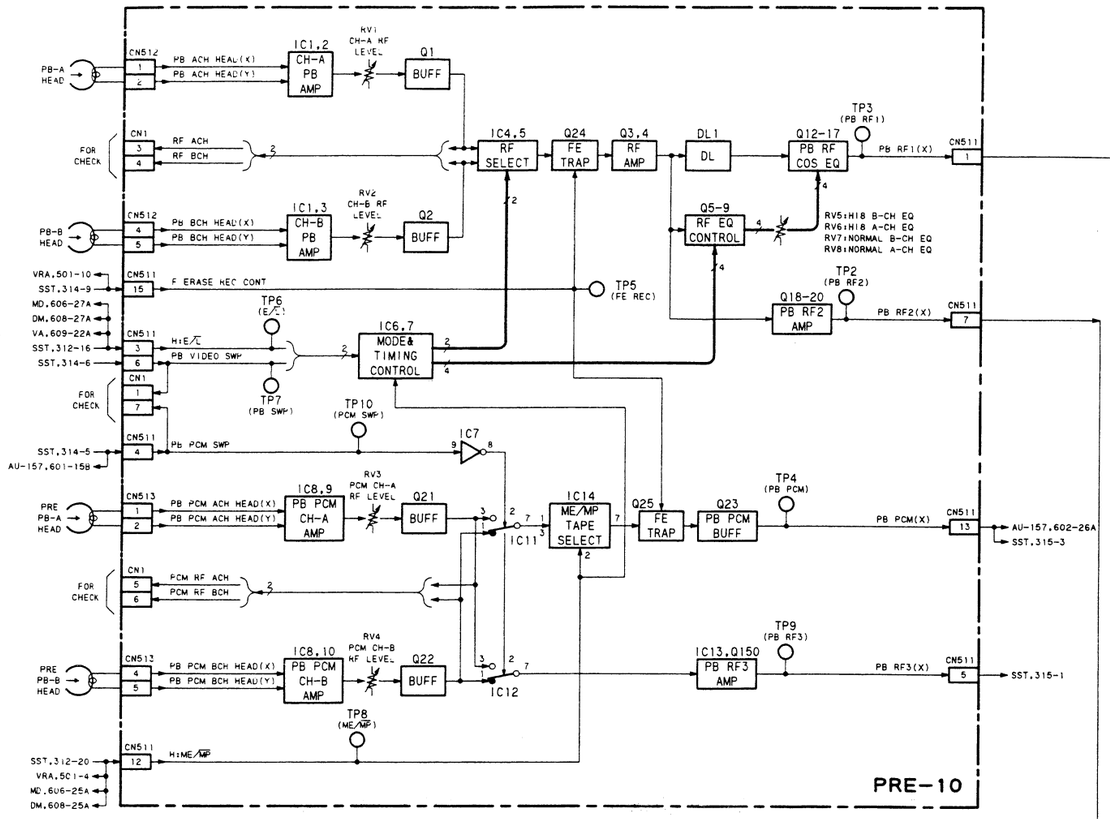

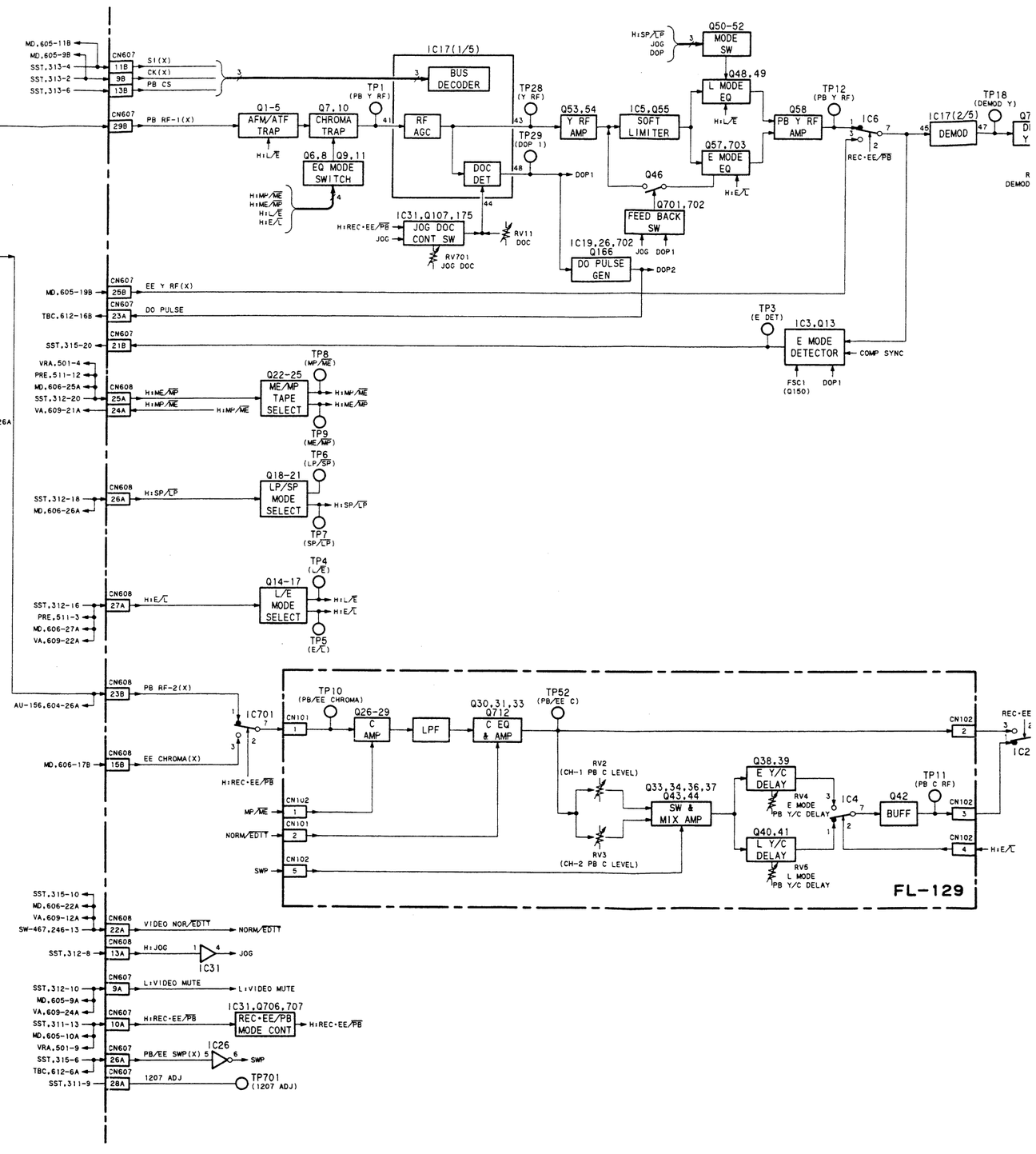

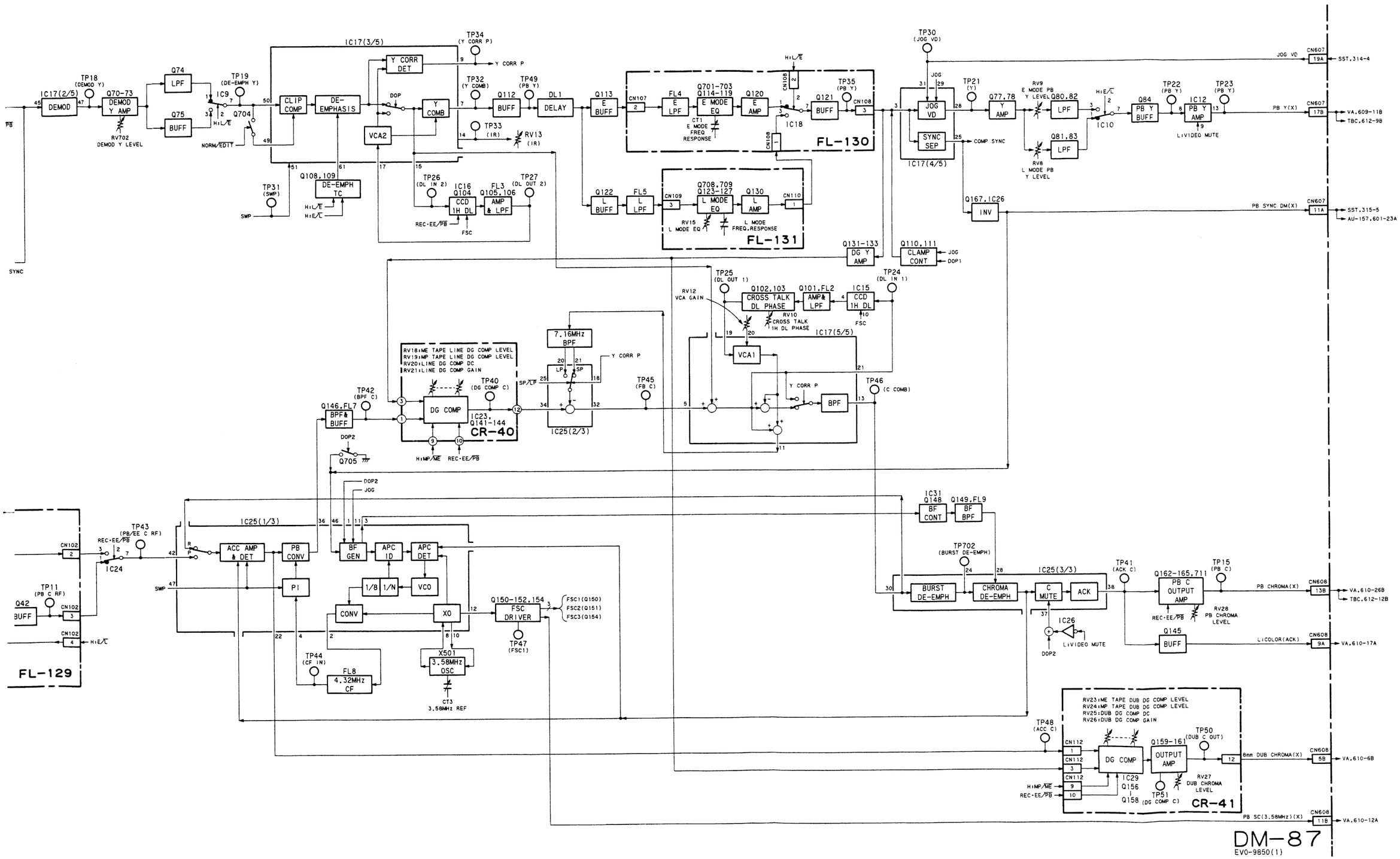

DM-87
EVO-9850(1)

DM-87 (2/3), FL-130, FL-131

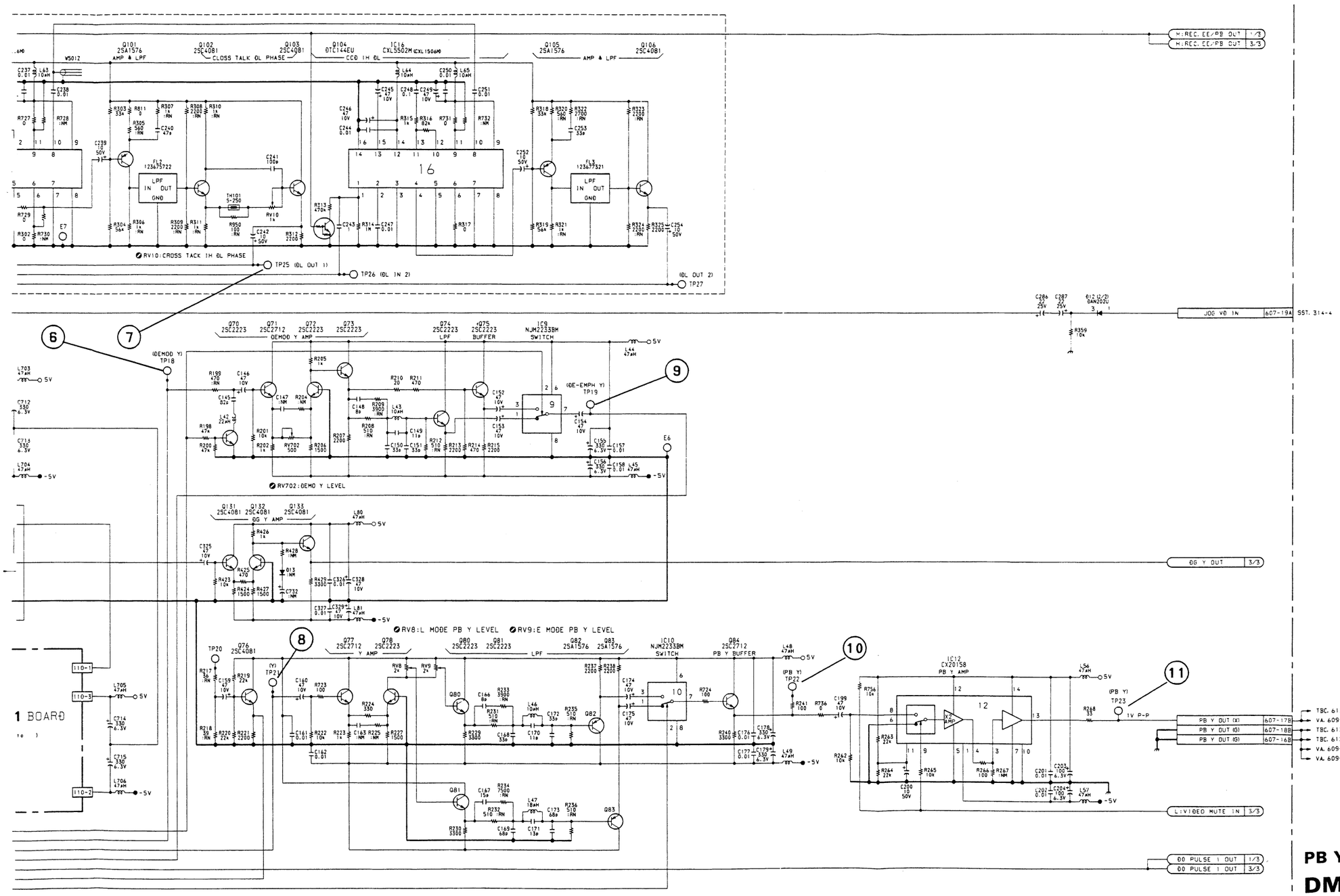

PB Y Process

DM-87 BOARD (2/3)

BOARD NO. 1-642-945-11, 12
EVO-9850 (J) : # 10001—
EVO-9850 (UC) : # 10031—

DM-87 (3/3), CR-40, CR-41

CR-4
A Side

1-642-9

A Side

① TP40 PB mode

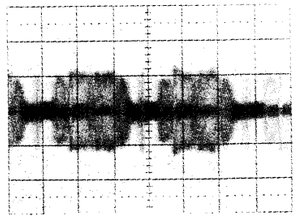

0.05v/div 20μsec/div

② TP50 PB mode

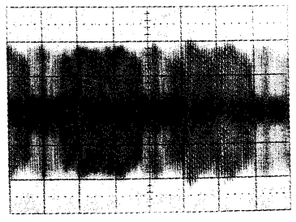

0.2v/div 20μsec/div

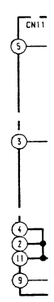

Measurement Condition
VIDEO IN : 75% color bars
PB mode : (WR5-8NSE : color bars)

13-14

A B C D E F G H

CR-40 BOARD
A Side

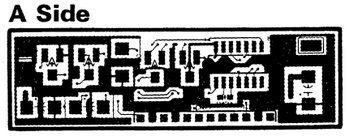

1-642-964-11 A SIDE

A Side is the same as Component Side

CR-40 BOARD
B Side

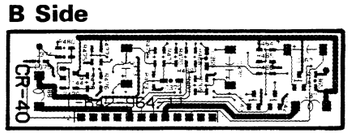

1-642-964-11 B SIDE

B Side is the same as Soldering Side

CR-41 BOARD
A Side

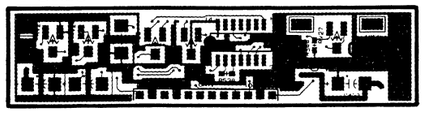

1-642-965-11 A SIDE

A Side is the same as Component Side

CR-41 BOARD
B Side

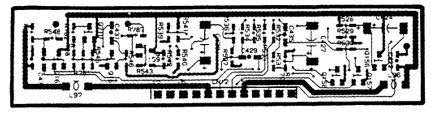

1-642-965-11 B SIDE

B Side is the same as Soldering Side

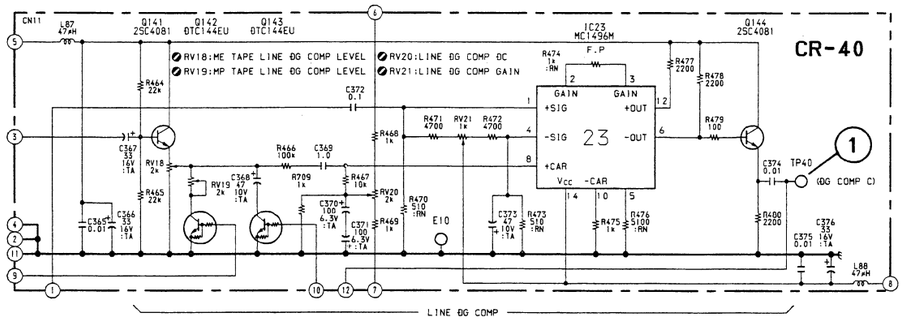

DG Compensator (LINE)
CR-40 BOARD

BOARD NO. 1-642-964-11
EVO-9850 (J) : # 10001—
EVO-9850 (UC) : # 10031—

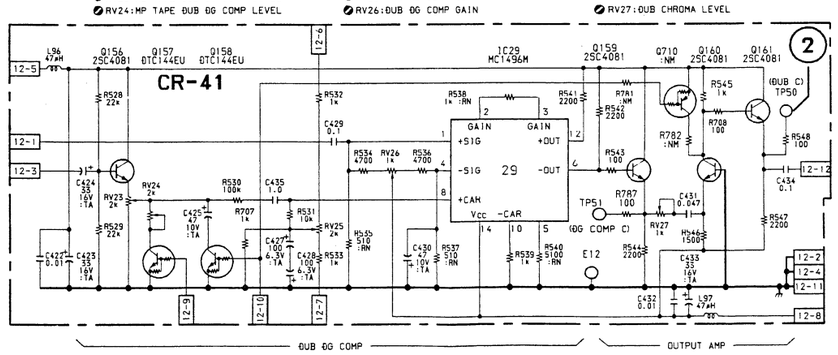

DG Compensator (DUB)
CR-41 BOARD

BOARD NO. 1-642-964-11
EVO-9850 (J) : # 10001—
EVO-9850 (UC) : # 10031—

bars)

DM-87 (3/3), CR-40, CR-41

CR-4
A Side

1-642-9

A Side

① TP40 PB mode

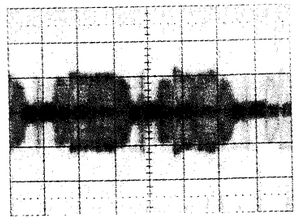

0.05v/div 20μsec/div

② TP50 PB mode

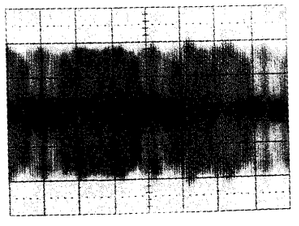

0.2v/div 20μsec/div

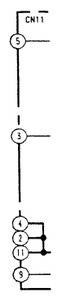

Measurement Condition
VIDEO IN: 75% color bars
PB mode: (WR5-8NSE: color bars)

13-14

A B C D E F G H

CR-40 BOARD
A Side

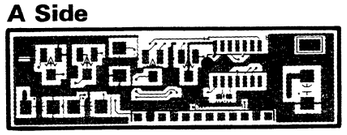

1-642-964-11 A SIDE

A Side is the same as Component Side

CR-40 BOARD
B Side

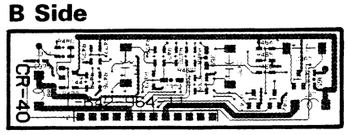

1-642-964-11 B SIDE

B Side is the same as Soldering Side

CR-41 BOARD
A Side

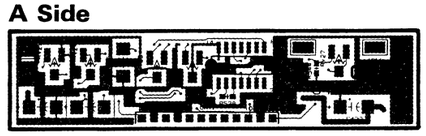

1-642-965-11 A SIDE

A Side is the same as Component Side

CR-41 BOARD
B Side

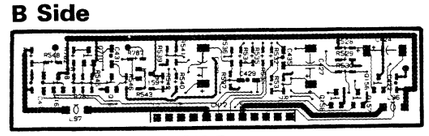

1-642-965-11 B SIDE

B Side is the same as Soldering Side

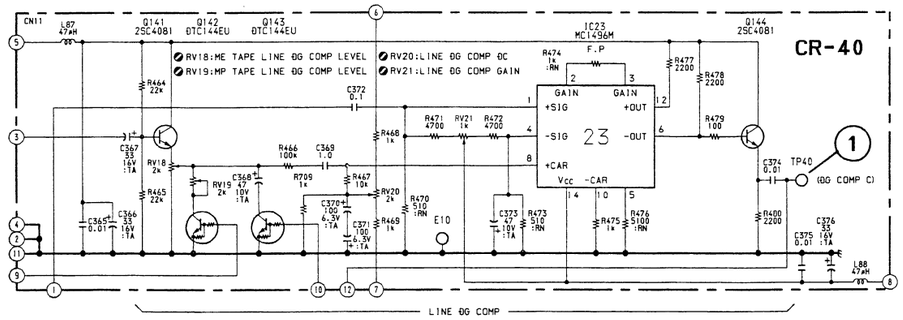

DG Compensator (LINE)
CR-40 BOARD

BOARD NO. 1-642-964-11
EVO-9850 (J) : #10001—
EVO-9850 (UC) : #10031—

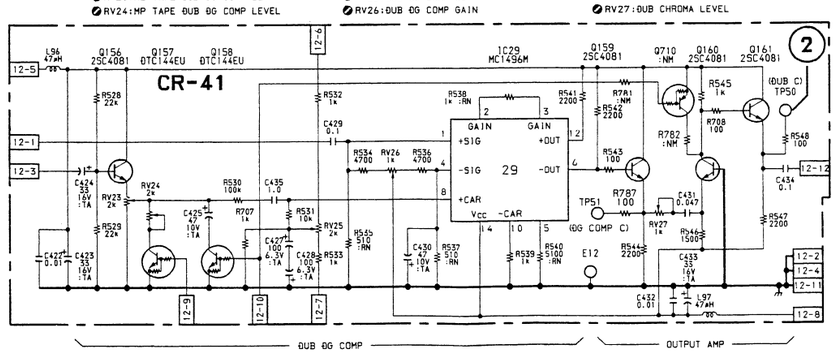

DG Compensator (DUB)
CR-41 BOARD

BOARD NO. 1-642-964-11
EVO-9850 (J) : #10001—
EVO-9850 (UC) : #10031—

DM-87 (3/3), CR-40, CR-41

① TP41 PB mode

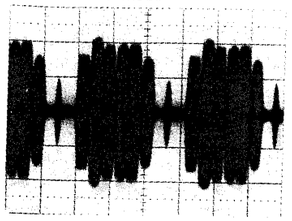

0.1v/div 20μsec/div

② TP42 PB mode

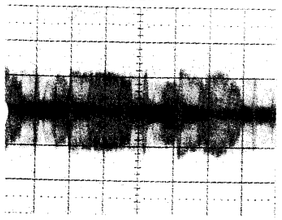

).05v/div 20μsec/div

③ TP43 PB mode

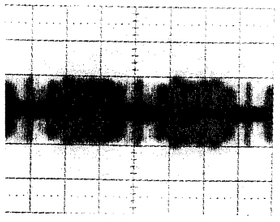

1v/div 20μsec/div

) TP45 PB mode

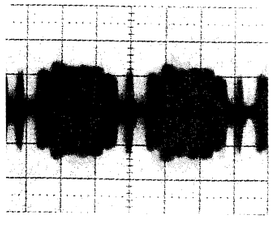

1v/div 20μsec/div

⑤ TP46 PB mode

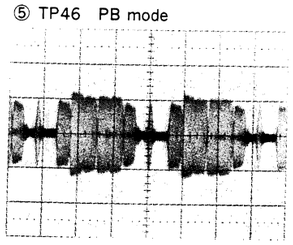

0.1v/div 20μsec/div

⑥ IC25 10pin PB mode

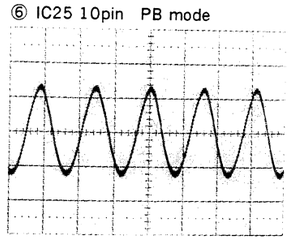

0.1v/div 0.05μsec/div

⑦ TP48 PB mode

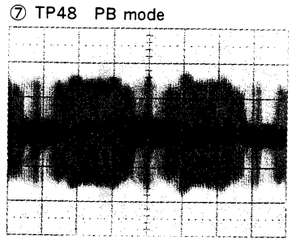

0.1v/div 20μsec/div

⑧ TP15 PB mode

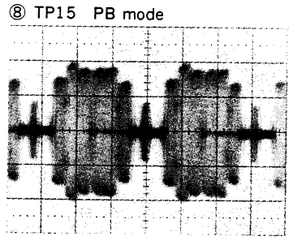

0.2v/div 20μsec/div

Measurement Condition
VIDEO IN: 75% color bars
PB mode: (WR5-8NSE: color bars)

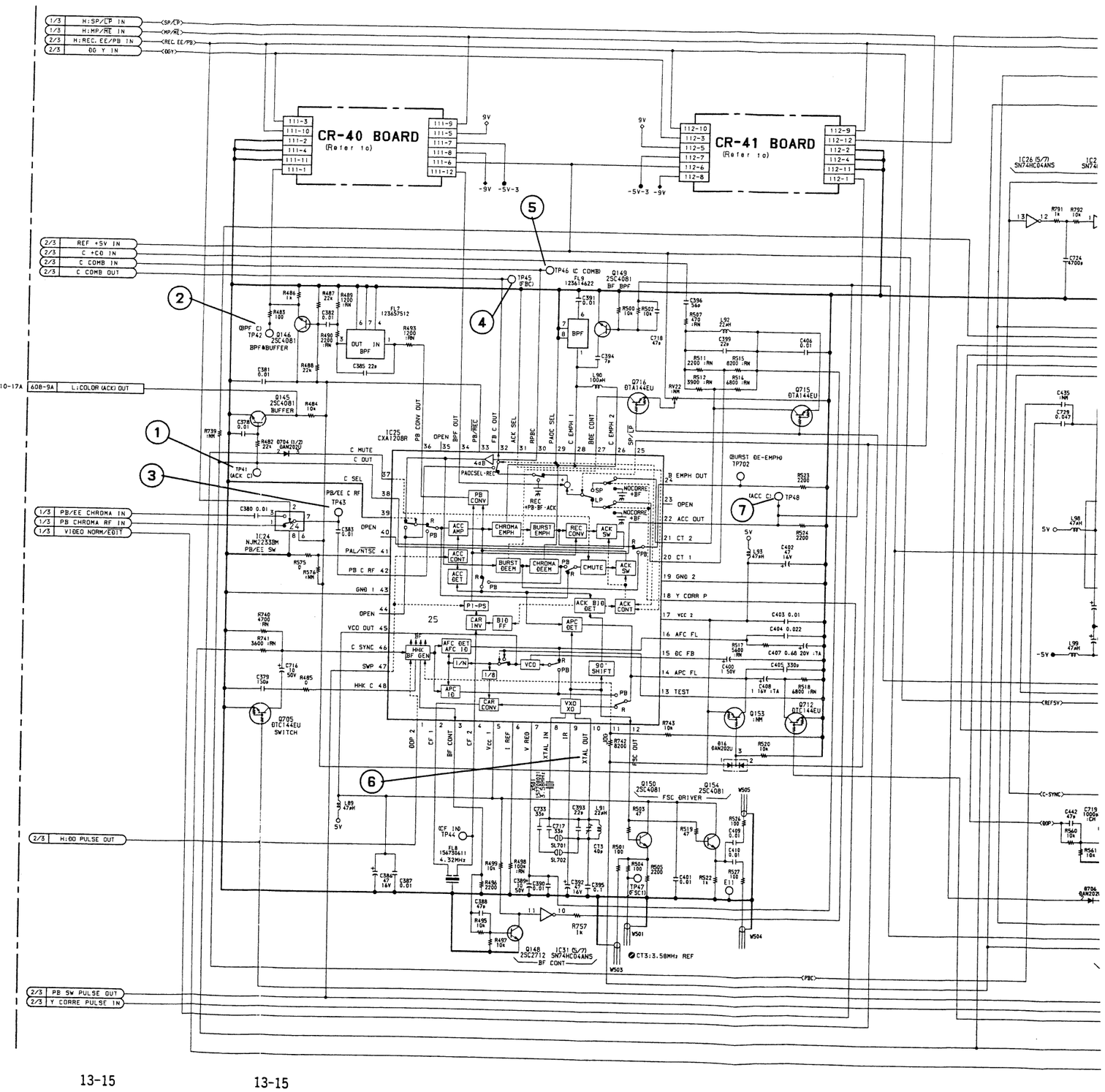

13-15

DM-87 (3/3), CR-40, CR-41

PB Chroma Process

DM-87 BOARD (3/3)

BOARD NO. 1-642-945-11
EVO-9850 (J) : #10001—
EVO-9850 (UC) : #10031—

13-15

DM-87 (3/3), CR-40, CR-41

① TP41 PB mode

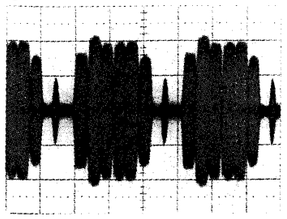

0.1v/div 20μsec/div

⑤ TP46 PB mode

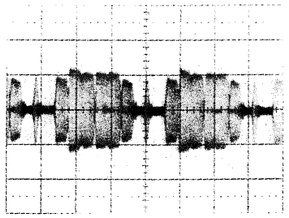

0.1v/div 20μsec/div

② TP42 PB mode

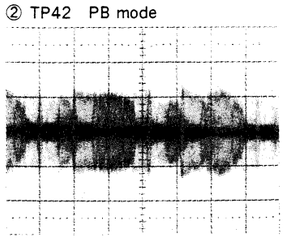

0.05v/div 20μsec/div

⑥ IC25 10pin PB mode

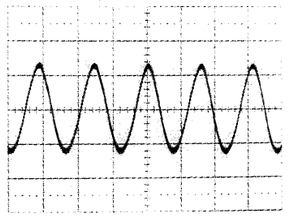

0.1v/div 0.05μsec/div

③ TP43 PB mode

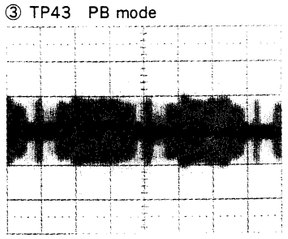

0.1v/div 20μsec/div

⑦ TP48 PB mode

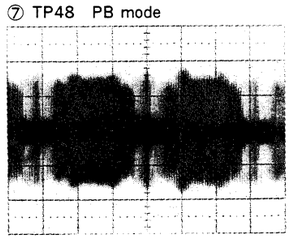

0.1v/div 20μsec/div

④ TP45 PB mode

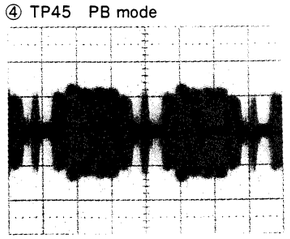

0.1v/div 20μsec/div

⑧ TP15 PB mode

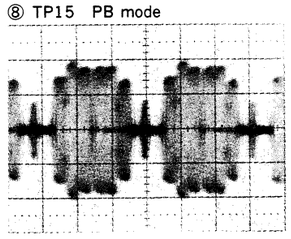

0.2v/div 20μsec/div

Measurement Condition
VIDEO IN: 75% color bars
PB mode: (WR5-8NSE: color bars)

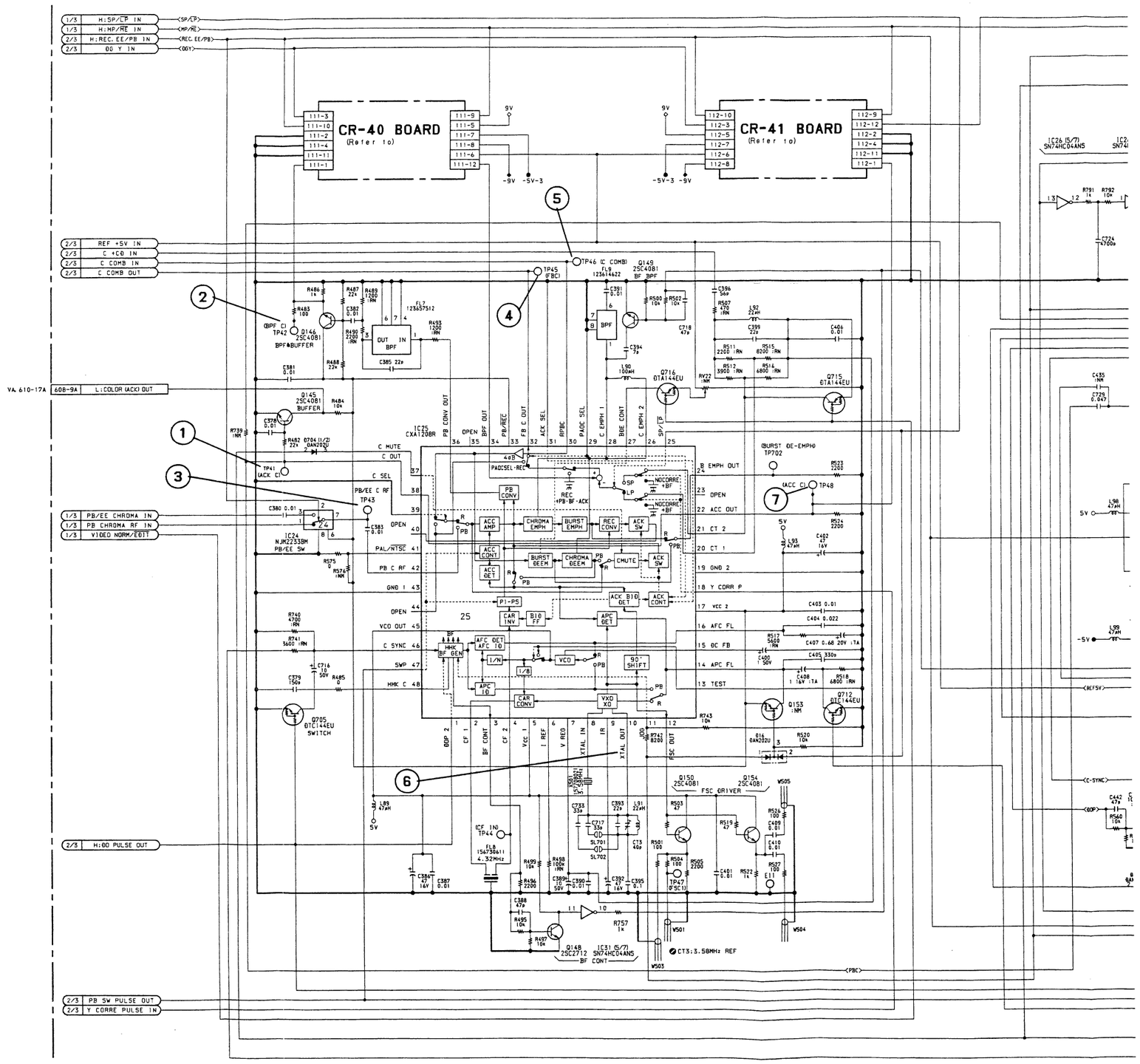

13-15(a) 13-15(a)

A | B | C | D | E | F | G | H

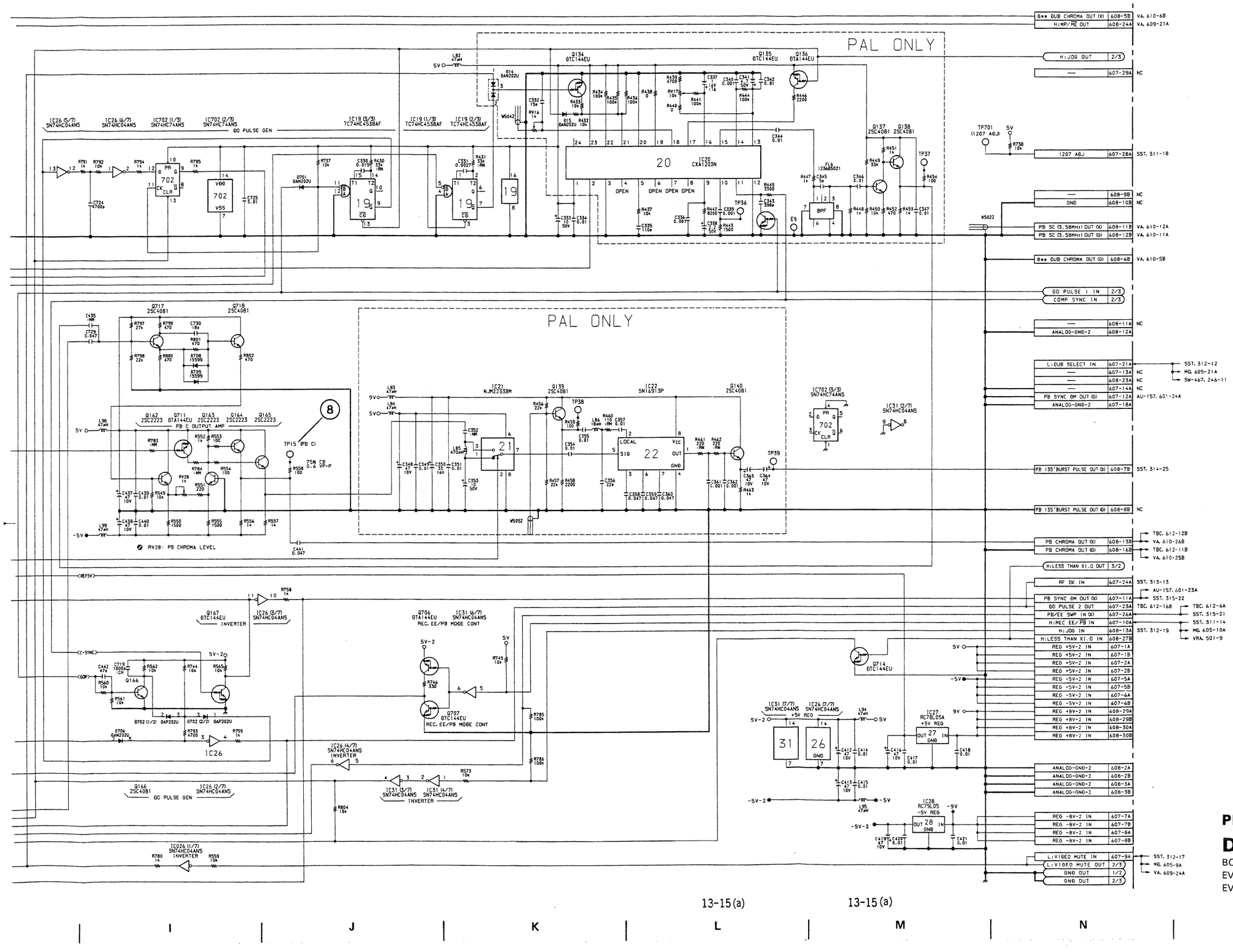

PB Chroma Process

DM-87 BOARD (3/3)

BOARD NO. 1-642-945-11
EVO-9850 (J) : # 10001—10120
EVO-9850 (UC) : # 10031—10340

13-15(a) 13-15(a)

I J K L M N O P

DM-87 (3/3), CR-40, CR-41

① TP41 PB mode

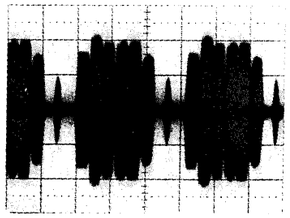

0.1v/div 20μsec/div

② TP42 PB mode

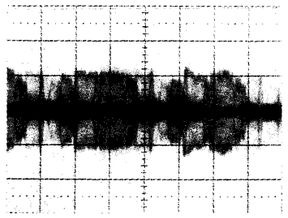

0.05v/div 20μsec/div

③ TP43 PB mode

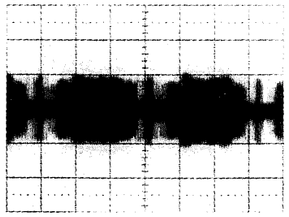

0.1v/div 20μsec/div

④ TP45 PB mode

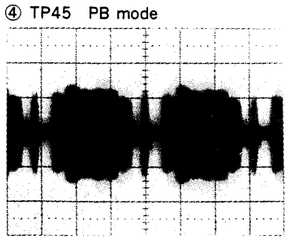

0.1v/div 20μsec/div

⑤ TP46 PB mode

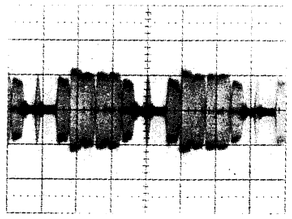

0.1v/div 20μsec/div

⑥ IC25 10pin PB mode

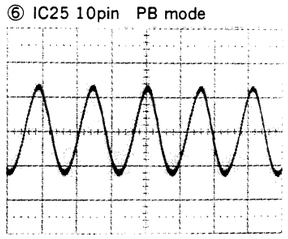

0.1v/div 0.05μsec/div

⑦ TP48 PB mode

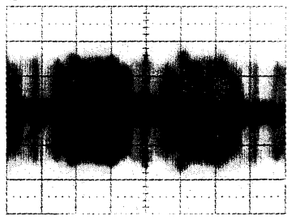

0.1v/div 20μsec/div

⑧ TP15 PB mode

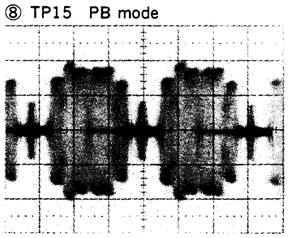

0.2v/div 20μsec/div

Measurement Condition
VIDEO IN: 75% color bars
PB mode: (WR5-8NSE: color bars)

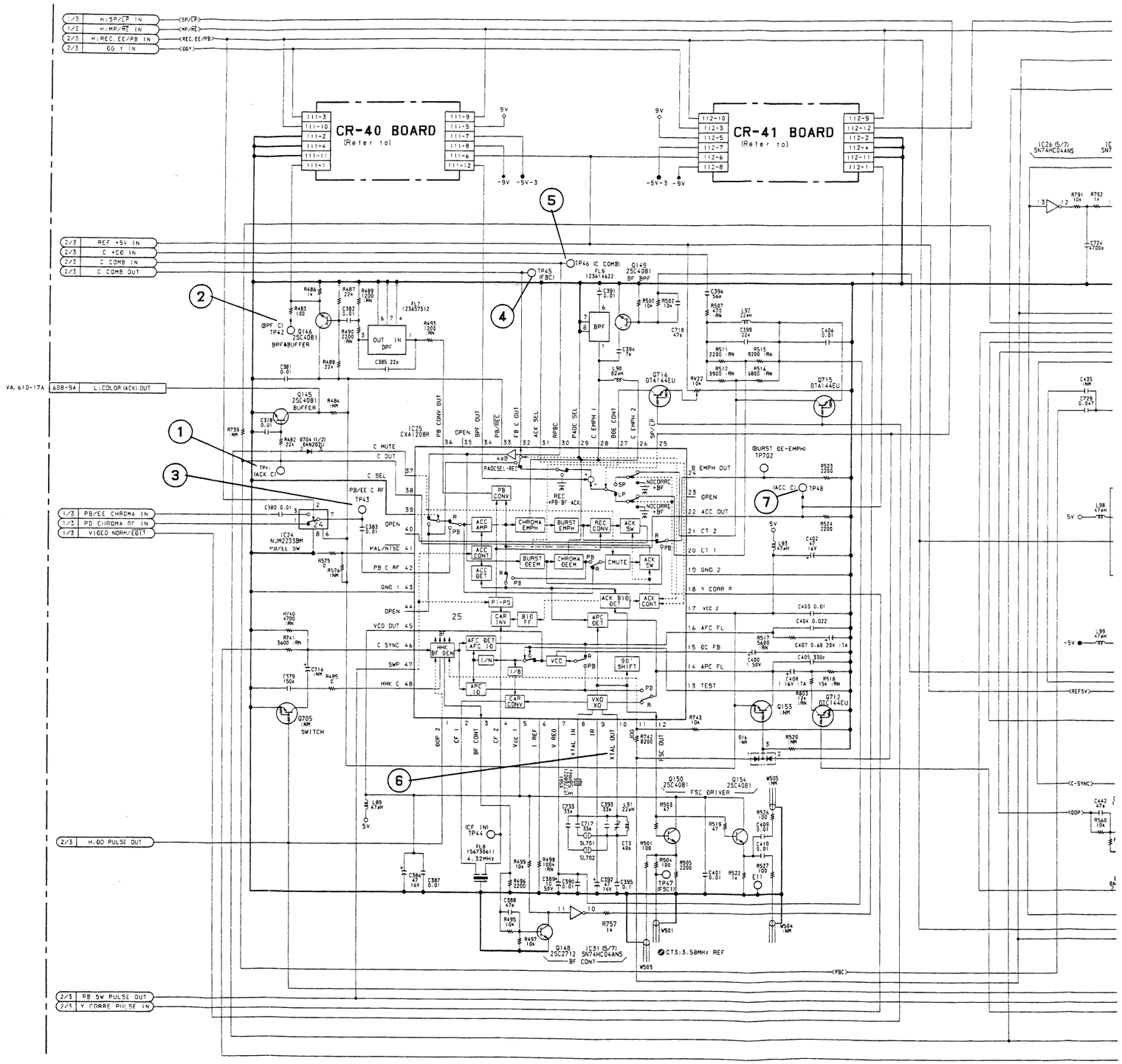

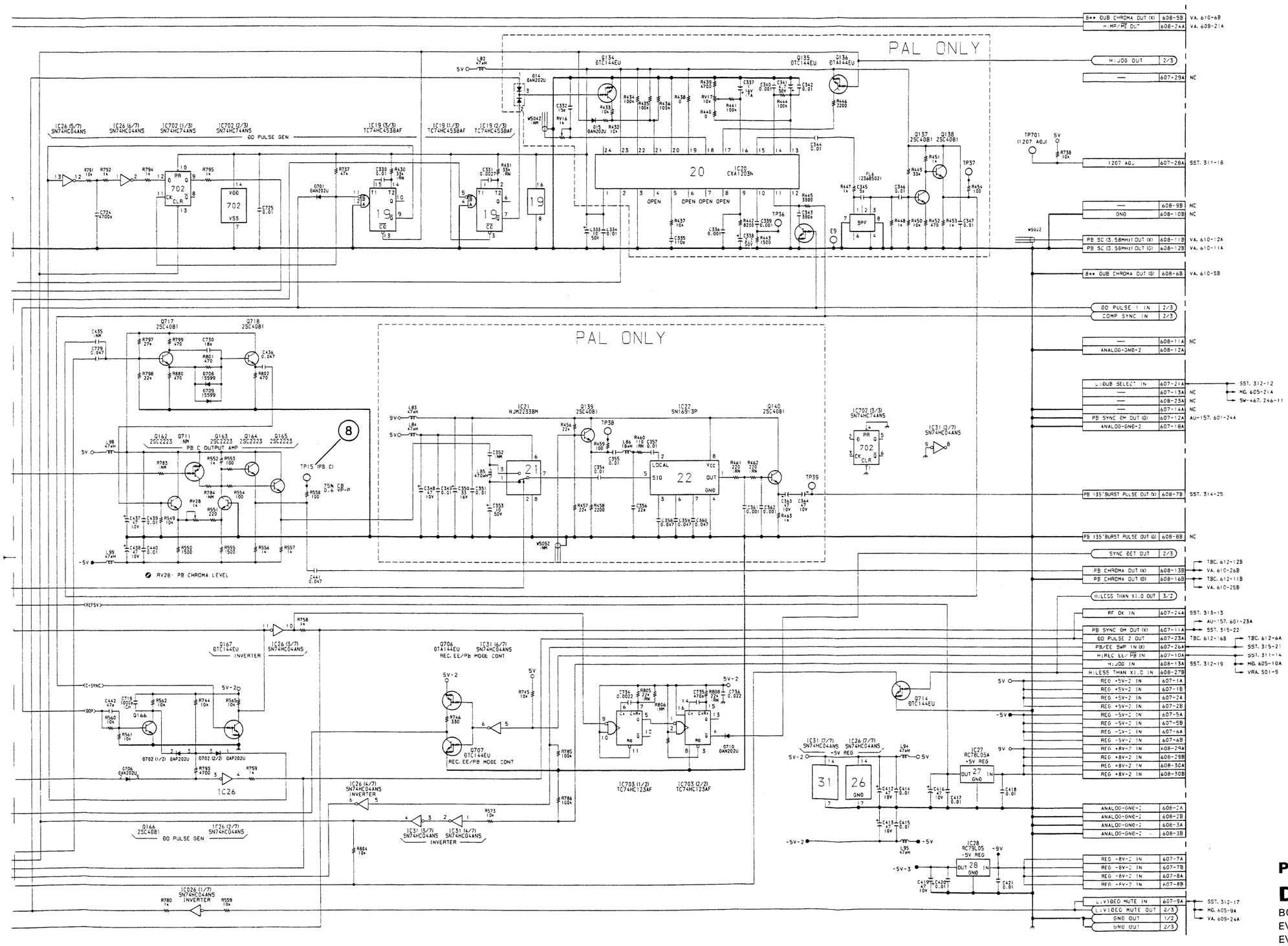

PB Chroma Process

DM-87 BOARD (3/3)

BOARD NO. 1-642-945-12
EVO-9850 (J) : # 10121—
EVO-9850 (UC) : # 10341—

I J K L M N O P

TBC-21 (1-642-949-11)

CN611	D-6	IC420	G-4	RV702	D-3
CN612	J-6	IC421	G-2		
		IC422	F-2	TP1	C-6
CV401	N-2	IC423	F-2	TP2	A-6
		IC424	F-2	TP3	B-6
D1	B-6 *	IC425	F-2	TP4	B-5
D2	B-6 *	IC701	E-3	TP5	B-1
D3	A-6 *	IC702	E-4	TP6	C-4
D5	B-6	IC703	E-3	TP7	C-5
D6	D-2	IC704	E-4	TP9	B-5
D401	G-4 *	IC705	F-4	TP10	A-3
D402	N-2 *	IC706	F-5	TP11	C-1
D403	L-5 *	IC707	E-4	TP12	D-1
D404	L-5 *	IC708	D-4	TP13	D-5
D405	L-6	IC709	D-4	TP14	E-1
D408	L-2 *			TP15	E-2
D409	H-1 *	LV3	D-2	TP16	D-5
D701	F-5	LV701	F-5	TP402	M-4
				TP403	M-5
E1	B-6	Q1	C-6 *	TP404	M-2
E2	B-1	Q2	B-6 *	TP405	M-1
E3	C-2	Q3	B-6 *	TP406	L-5
E401	N-2	Q4	B-6	TP407	K-3
E402	G-1	Q5	B-6 *	TP408	L-6
E403	L-5	Q6	B-5 *	TP409	G-3
E701	E-5	Q8	B-5 *	TP410	E-2
		Q9	C-3 *	TP411	E-2
IC1	C-6	Q11	D-1 *	TP701	G-3
IC2	B-6	Q12	D-1 *	TP703	F-5
IC3	A-5	Q13	D-1 *	TP704	F-4
IC4	A-2	Q14	D-1 *	TP705	F-3
IC5	B-1	Q401	N-6 *	TP706	D-3
IC6	B-2	Q402	N-4	TP707	D-3
IC7	B-2	Q403	N-6		
IC8	B-3	Q404	N-4	X1	B-4
IC11	B-5	Q405	N-6	X2	B-4
IC12	E-6	Q406	M-4 *	X3	D-2
IC14	B-3	Q407	M-6 *	X401	K-6
IC15	A-3	Q408	N-4	X701	F-5
IC16	C-2	Q409	M-5 *		
IC17	D-2	Q411	M-4 *	* mark; B SIDE mount.	
IC18	C-2	Q412	M-6 *		
IC19	C-3	Q413	L-6 *		
IC20	C-4	Q414	J-3 *		
IC21	C-2	Q415	K-1 *		
IC22	C-2	Q416	E-2 *		
IC23	D-1	Q417	E-2		
IC28	D-2	Q418	E-1 *		
IC29	D-3	Q419	E-2 *		
IC30	D-4	Q420	N-6 *		
IC31	C-1	Q421	N-5 *		
IC401	F-6	Q422	N-4 *		
IC402	L-1	Q423	M-4 *		
IC403	L-5	Q424	M-3 *		
IC404	L-4	Q425	L-2 *		
IC405	L-2	Q426	L-2 *		
IC406	K-4	Q427	L-2 *		
IC407	M-2	Q701	F-5 *		
IC408	G-6	Q702	F-6 *		
IC409	K-2	Q703	F-5 *		
IC410	K-2				
IC411	K-1	RV1	B-4		
IC412	L-2	RV2	B-3		
IC413	L-1	RV3	C-1		
IC414	M-4	RV4	A-4		
IC415	H-4	RV401	M-6		
IC416	H-3	RV402	N-5		
IC417	H-1	RV403	L-6		
IC418	K-1	RV701	D-2		

TBC-21 BOARD
A Side

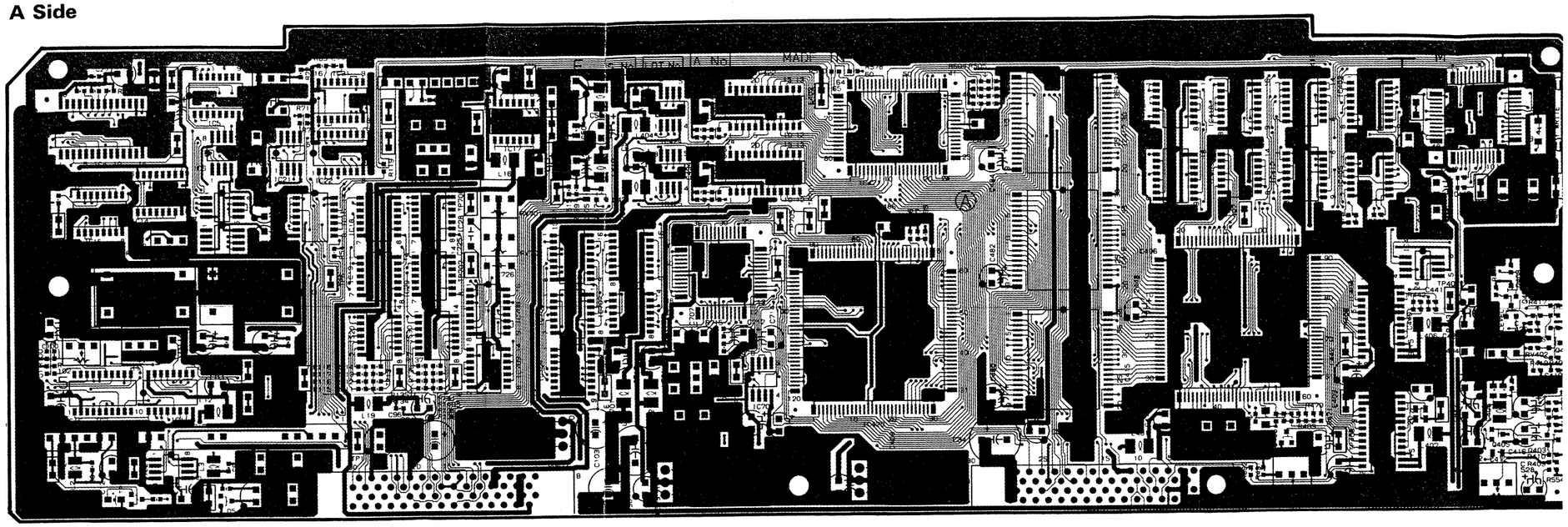

1-642-949-11 A SIDE

A Side is the same as Component Side

TBC-21 BOARD
B Side

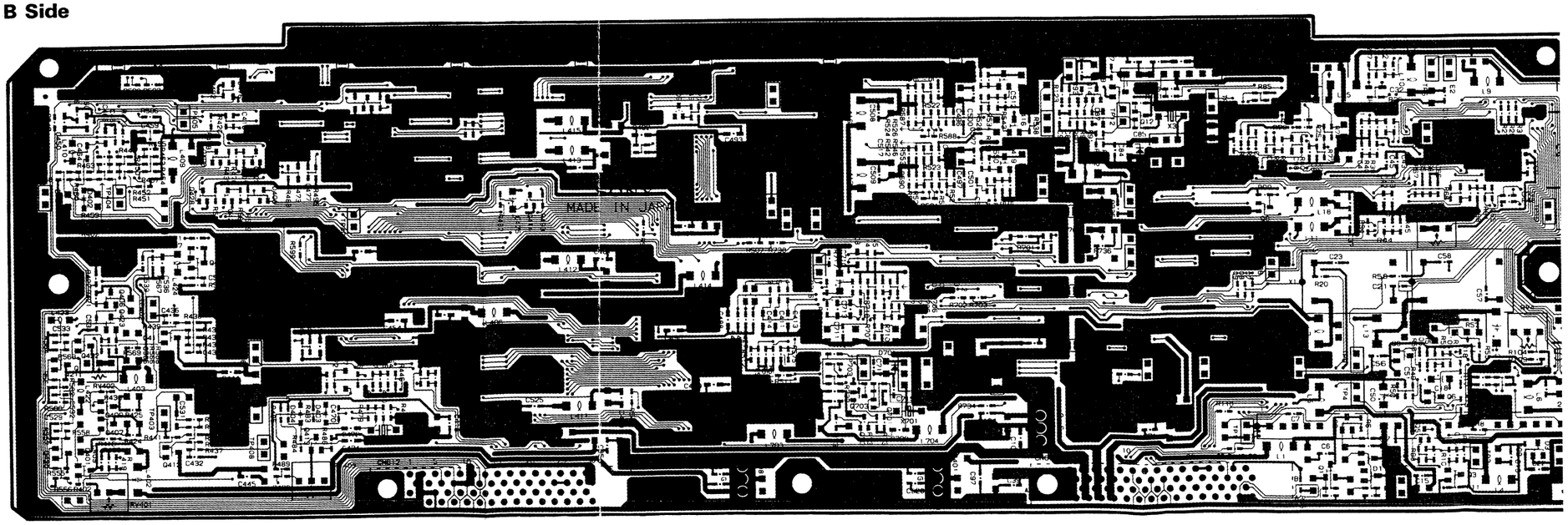

1-642-949-11 B SIDE

B Side is the same as Soldering Side

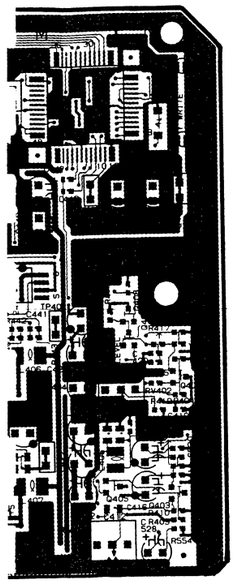

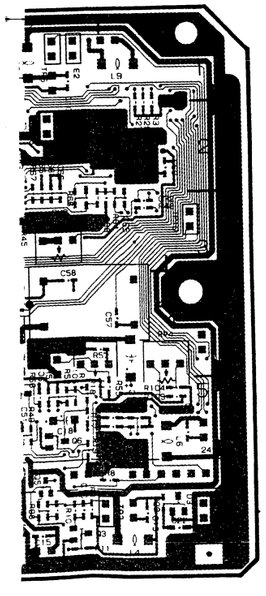

① TP6 EE mode

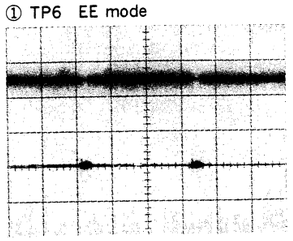

2v/div 20μsec/div

② TP1 EE mode

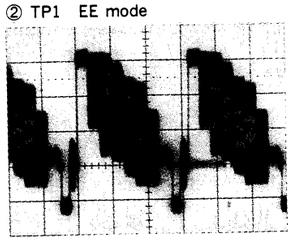

0.1v/div 20μsec/div

③ TP2 EE mode

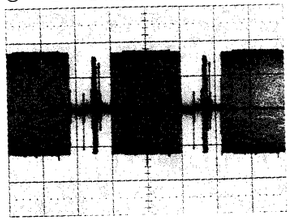

1v/div 20μsec/div

④ TP3 EE mode

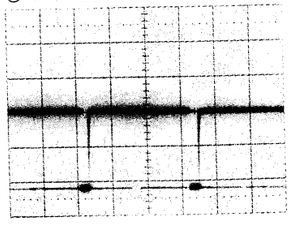

2v/div 20μsec/div

⑤ TP15 EE mode

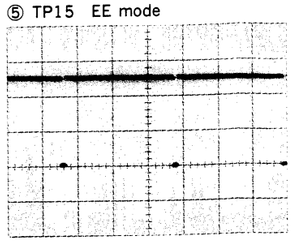

2v/div 20μsec/div

⑥ TP5 EE mode

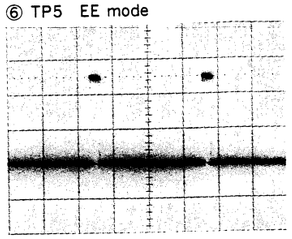

2v/div 20μsec/div

⑦ TP11 EE mode

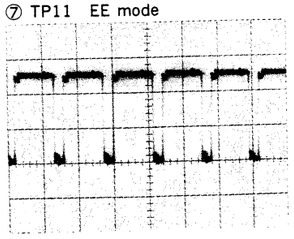

2v/div 0.2μsec/div

⑧ TP10 EE mode

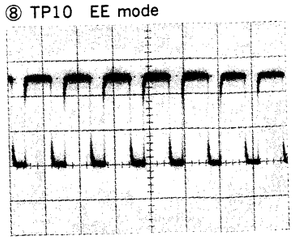

2v/div 0.5μsec/div

⑨ TP13 EE mode

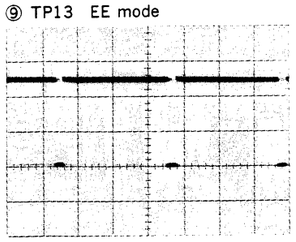

2v/div 20μsec/div

⑩ TP14 EE mode

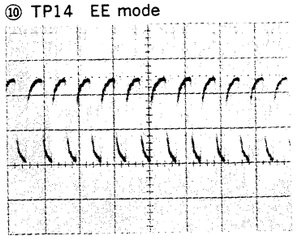

2v/div 0.1μsec/div

⑪ TP16 EE mode

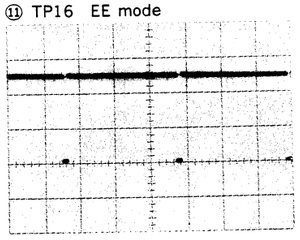

2v/div 20μsec/div

Measurement Condition
VIDEO IN: 75% color bars
EE mode

13-16

TBC-21 BOARD
A Side

Serial No.: (J) 10001—10030
Serial No.: (UC) 10031—10250

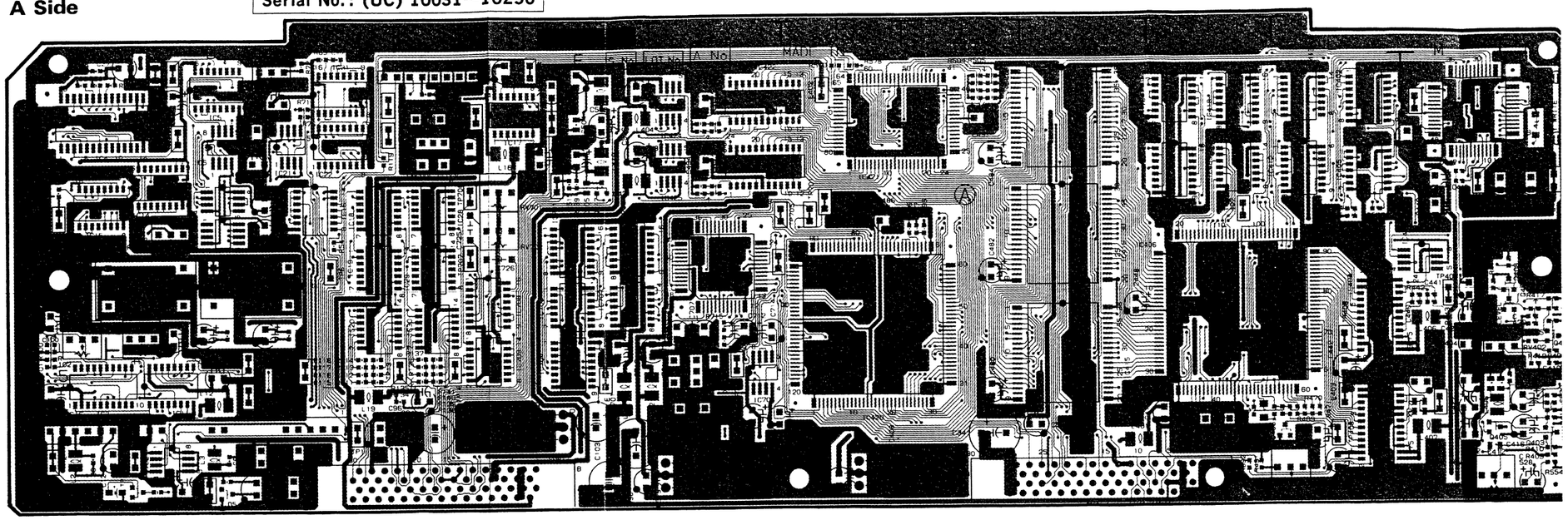

1-642-949-11 A SIDE

A Side is the same as Component Side

TBC-21 BOARD
B Side

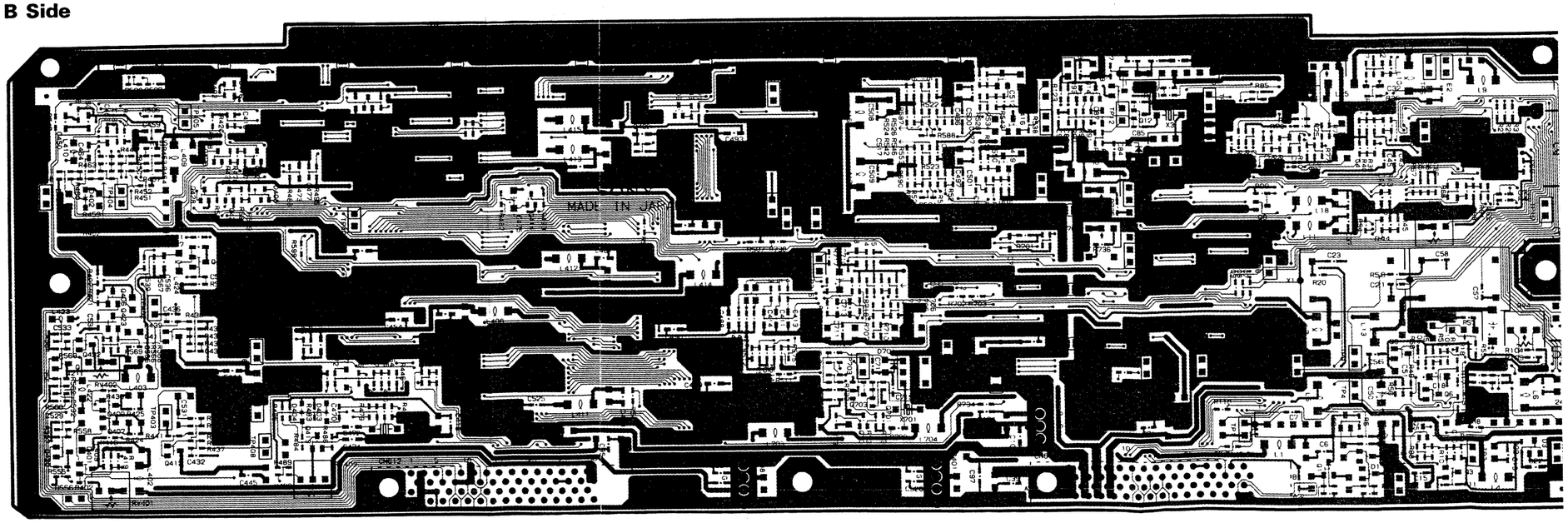

1-642-949-11 B SIDE

B Side is the same as Soldering Side

TBC-21 (1-642-949-11)

CN611	D-6	IC420	G-4	RV702	D-3
CN612	J-6	IC421	G-2		
		IC422	F-2	TP1	C-6
CV401	N-2	IC423	F-2	TP2	A-6
		IC424	F-2	TP3	B-6
D1	B-6 *	IC425	F-2	TP4	B-5
D2	B-6 *	IC701	E-3	TP5	B-1
D3	A-6 *	IC702	E-4	TP6	C-4
D5	B-6	IC703	E-3	TP7	C-5
D6	D-2	IC704	E-4	TP9	B-5
D401	G-4 *	IC705	F-4	TP10	A-3
D402	N-2 *	IC706	F-5	TP11	C-1
D403	L-5 *	IC707	E-4	TP12	D-1
D404	L-5 *	IC708	D-4	TP13	D-5
D405	L-6	IC709	D-4	TP14	E-1
D408	L-2 *			TP15	E-2
D409	H-1 *	LV3	D-2	TP16	D-5
D701	F-5	LV701	F-5	TP402	M-4
				TP403	M-5
E1	B-6	Q1	C-6 *	TP404	M-2
E2	B-1	Q2	B-6 *	TP405	M-1
E3	C-2	Q3	B-6 *	TP406	L-5
E401	N-2	Q4	B-6	TP407	K-3
E402	G-1	Q5	B-6 *	TP408	L-6
E403	L-5	Q6	B-5 *	TP409	G-3
E701	E-5	Q8	B-5 *	TP410	E-2
		Q9	C-3 *	TP411	E-2
IC1	C-6	Q11	D-1 *	TP701	G-3
IC2	B-6	Q12	D-1 *	TP703	F-5
IC3	A-5	Q13	D-1 *	TP704	F-4
IC4	A-2	Q14	D-1 *	TP705	F-3
IC5	B-1	Q401	N-6 *	TP706	D-3
IC6	B-2	Q402	N-4	TP707	D-3
IC7	B-2	Q403	N-6		
IC8	B-3	Q404	N-4	X1	B-4
IC11	B-5	Q405	N-6	X2	B-4
IC12	E-6	Q406	M-4 *	X3	D-2
IC14	B-3	Q407	M-6 *	X401	K-6
IC15	A-3	Q408	N-4	X701	F-5
IC16	C-2	Q409	M-5 *		
IC17	D-2	Q411	M-4 *	* mark ; B SIDE mount.	
IC18	C-2	Q412	M-6 *		
IC19	C-3	Q413	L-6 *		
IC20	C-4	Q414	J-3 *		
IC21	C-2	Q415	K-1 *		
IC22	C-2	Q416	E-2 *		
IC23	D-1	Q417	E-2		
IC28	D-2	Q418	E-1 *		
IC29	D-3	Q419	E-2 *		
IC30	D-4	Q420	N-6 *		
IC31	C-1	Q421	N-5 *		
IC401	F-6	Q422	N-4 *		
IC402	L-1	Q423	M-4 *		
IC403	L-5	Q424	M-3 *		
IC404	L-4	Q425	L-2 *		
IC405	L-2	Q426	L-2 *		
IC406	K-4	Q427	L-2 *		
IC407	M-2	Q701	F-5 *		
IC408	G-6	Q702	F-6 *		
IC409	K-2	Q703	F-5 *		
IC410	K-2				
IC411	K-1	RV1	B-4		
IC412	L-2	RV2	B-3		
IC413	L-1	RV3	C-1		
IC414	M-4	RV4	A-4		
IC415	H-4	RV401	M-6		
IC416	H-3	RV402	N-5		
IC417	H-1	RV403	L-6		
IC418	K-1	RV701	D-2		

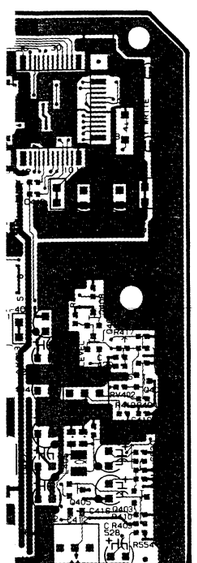

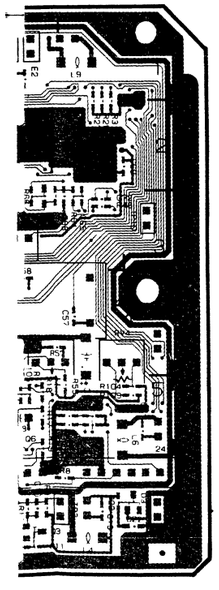

① TP6 EE mode

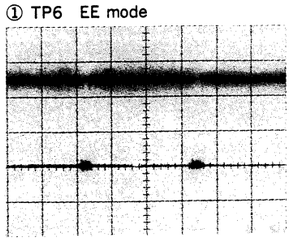

2v/div 20μsec/div

② TP1 EE mode

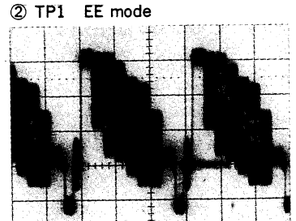

0.1v/div 20μsec/div

③ TP2 EE mode

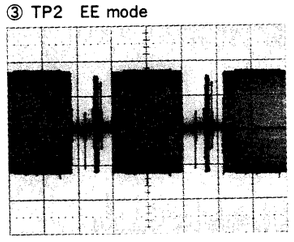

1v/div 20μsec/div

④ TP3 EE mode

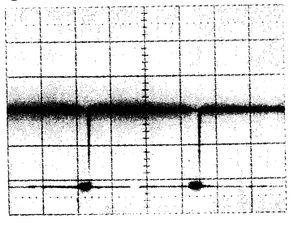

2v/div 20μsec/div

⑤ TP15 EE mode

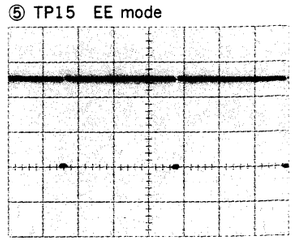

2v/div 20μsec/div

⑥ TP5 EE mode

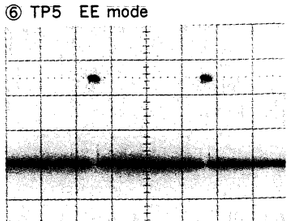

2v/div 20μsec/div

⑦ TP11 EE mode

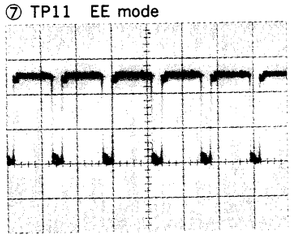

2v/div 0.2μsec/div

⑧ TP10 EE mode

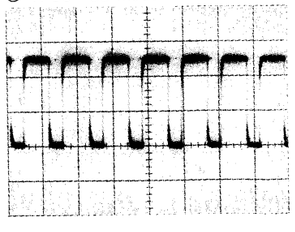

2v/div 0.5μsec/div

⑨ TP13 EE mode

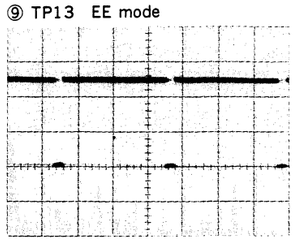

2v/div 20μsec/div

⑩ TP14 EE mode

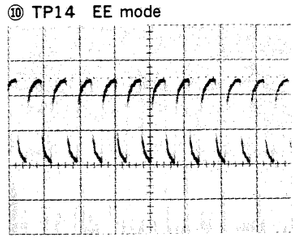

2v/div 0.1μsec/div

⑪ TP16 EE mode

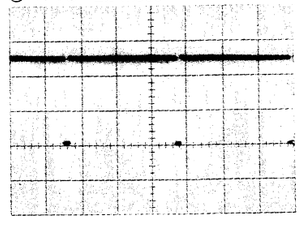

2v/div 20μsec/div

Measurement Condition
VIDEO IN: 75% color bars
EE mode

13-16(a)

TBC-21 (1-642-949-12)

CN611	E-6	IC418	K-1	RV403	L-6
CN612	K-6	IC420	G-6	RV701	D-3
		IC421	G-2	RV702	D-3
CV401	N-2	IC422	F-1		
		IC423	F-3	TP1	C-6
D1	B-6 *	IC424	F-2	TP2	A-6
D2	B-6 *	IC425	F-3	TP3	A-6
D3	A-6 *	IC701	E-3	TP4	B-5
D5	C-2	IC702	E-4	TP5	B-1
D6	D-2	IC703	E-3	TP6	C-4
D401	G-4 *	IC704	E-5	TP7	C-5
D402	N-2 *	IC705	F-3	TP9	B-5
D403	L-5 *	IC706	F-5	TP10	A-3
D404	L-5 *	IC707	E-4	TP11	D-1
D405	K-6	IC708	D-4	TP12	D-1
D407	L-3 *	IC709	D-5	TP13	C-5
D408	L-2 *			TP14	E-1
D409	H-1 *	LV3	D-2	TP15	B-2
D701	F-5	LV701	F-5	TP16	D-5
				TP17	D-2
E1	B-6	Q1	C-6 *	TP402	M-4
E2	B-1	Q2	B-6 *	TP403	M-5
E3	D-2	Q3	B-6 *	TP404	M-3
E401	N-3	Q4	B-6	TP405	M-1
E402	G-1	Q5	B-6 *	TP406	L-4
E403	L-5	Q6	B-5 *	TP407	K-3
E701	E-5	Q8	B-5 *	TP408	L-6
		Q9	C-3 *	TP409	G-3
IC1	B-6	Q11	D-1 *	TP410	E-2
IC2	B-6	Q12	D-2 *	TP411	E-3
IC3	A-6	Q13	D-1 *	TP701	G-3
IC4	A-2	Q14	D-1 *	TP703	F-5
IC5	B-1	Q401	N-6 *	TP704	G-4
IC6	B-2	Q402	N-4	TP705	G-3
IC7	B-2	Q403	N-6	TP706	D-3
IC8	B-3	Q404	N-4	TP707	D-4
IC11	B-5	Q405	M-6		
IC12	E-5	Q406	M-4 *	X1	C-4
IC14	B-3	Q407	M-6 *	X2	A-4
IC15	A-3	Q408	N-4	X3	D-1
IC16	C-3	Q409	M-5 *	X401	K-6
IC17	D-1	Q411	M-4 *	X701	F-6
IC18	C-3	Q412	M-6 *		
IC19	C-4	Q413	L-6 *		
IC20	C-4	Q414	J-3 *		
IC21	C-2	Q415	K-1 *		
IC22	C-2	Q416	E-1 *		
IC23	D-1	Q417	E-3		
IC28	D-2	Q418	E-1 *		
IC29	D-4	Q419	E-2 *		
IC30	D-4	Q420	N-6 *		
IC31	C-1	Q421	N-5 *		
IC401	F-6	Q422	N-4 *		
IC402	L-1	Q423	M-4 *		
IC403	L-5	Q424	L-3 *		
IC404	L-4	Q425	L-2 *		
IC405	L-2	Q426	L-2 *		
IC406	K-4	Q427	L-3 *		
IC407	N-2	Q428	M-2 *		
IC408	G-6	Q701	F-6 *		
IC409	K-2	Q702	F-6 *		
IC410	J-2	Q703	F-5 *		
IC411	J-1				
IC412	K-2	RV1	A-4		
IC413	L-1	RV2	B-3		
IC414	M-3	RV3	C-1		
IC415	J-5	RV4	A-4		
IC416	J-4	RV401	M-6		
IC417	J-2	RV402	N-5		

* mark; B SIDE mount.

TBC-21 BOARD
A Side

Serial No.: (J) 10031 and higher
Serial No.: (UC) 10251 and higher

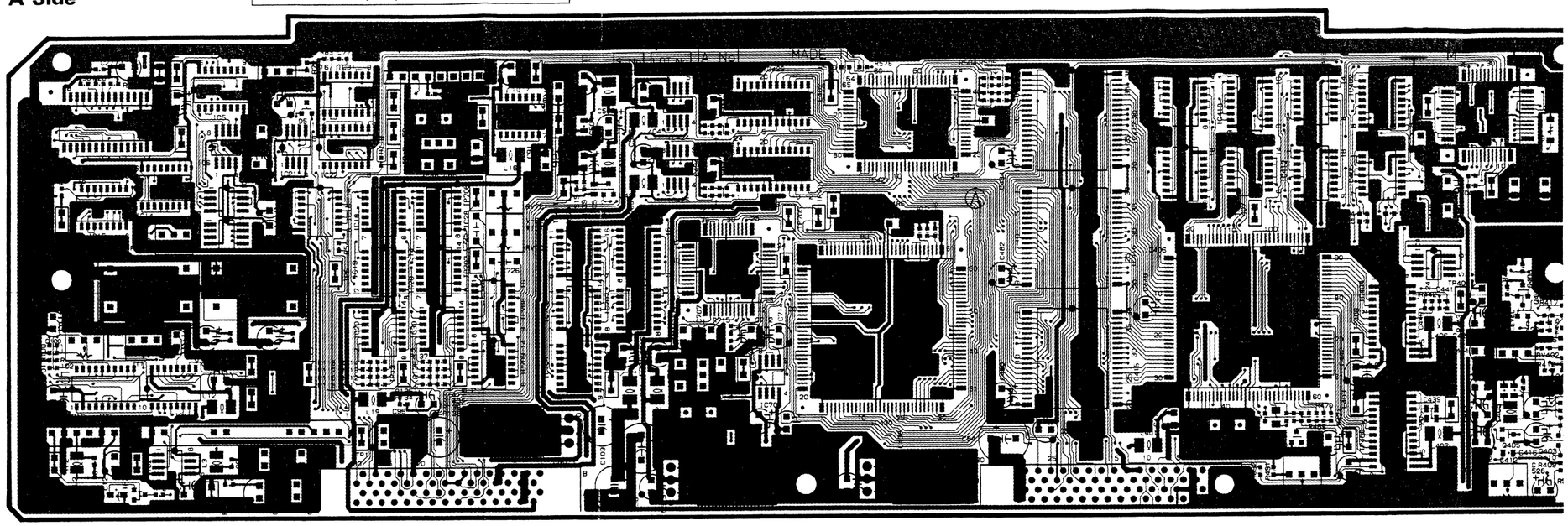

1-642-949-12 A SIDE

A Side is the same as Component Side

TBC-21 BOARD
B Side

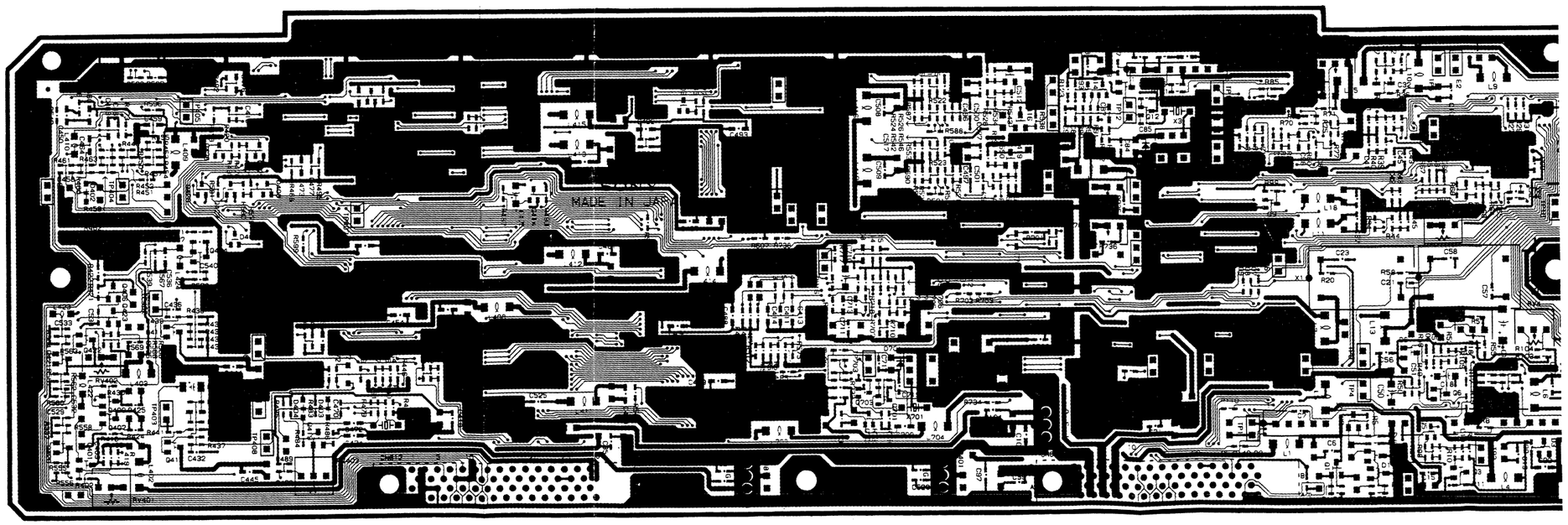

1-642-949-12 B SIDE

B Side is the same as Soldering Side

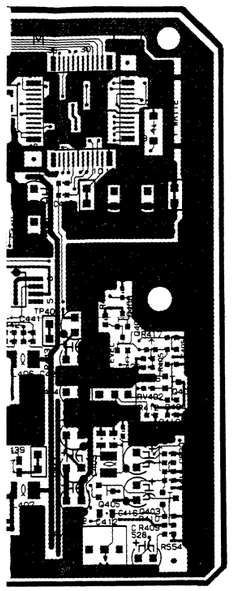

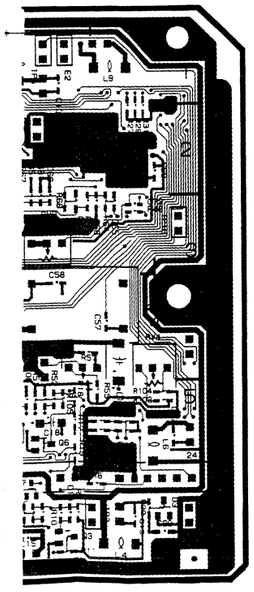

① TP6 EE mode

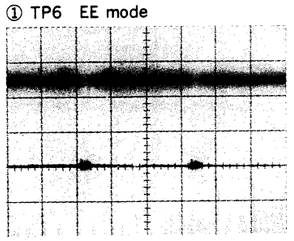

2v/div 20μsec/div

② TP1 EE mode

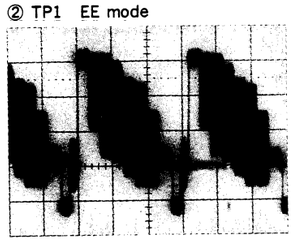

0.1v/div 20μsec/div

③ TP2 EE mode

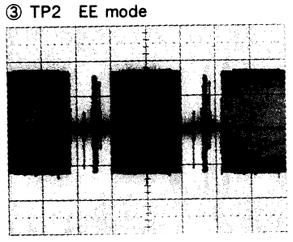

1v/div 20μsec/div

④ TP3 EE mode

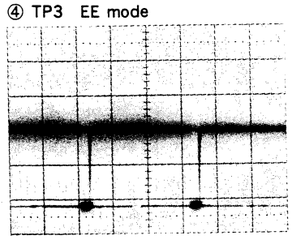

2v/div 20μsec/div

⑤ TP15 EE mode

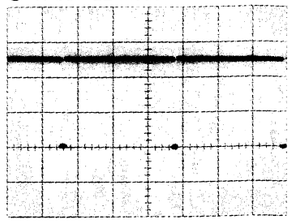

2v/div 20μsec/div

⑥ TP5 EE mode

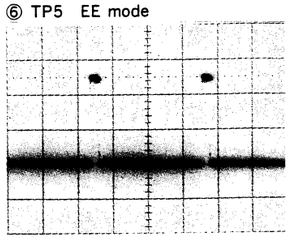

2v/div 20μsec/div

⑦ TP11 EE mode

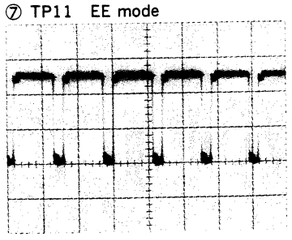

2v/div 0.2μsec/div

⑧ TP10 EE mode

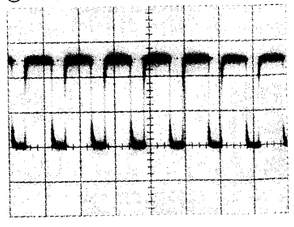

2v/div 0.5μsec/div

⑨ TP13 EE mode

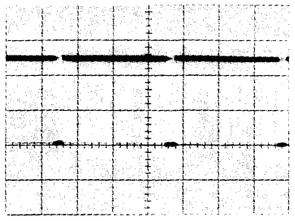

2v/div 20μsec/div

⑩ TP14 EE mode

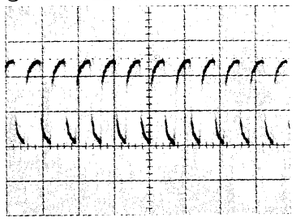

2v/div 0.1μsec/div

⑪ TP16 EE mode

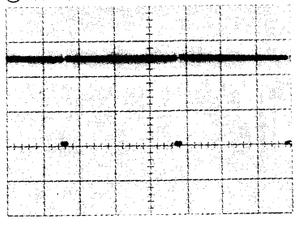

2v/div 20μsec/div

Measurement Condition
VIDEO IN: 75% color bars
EE mode

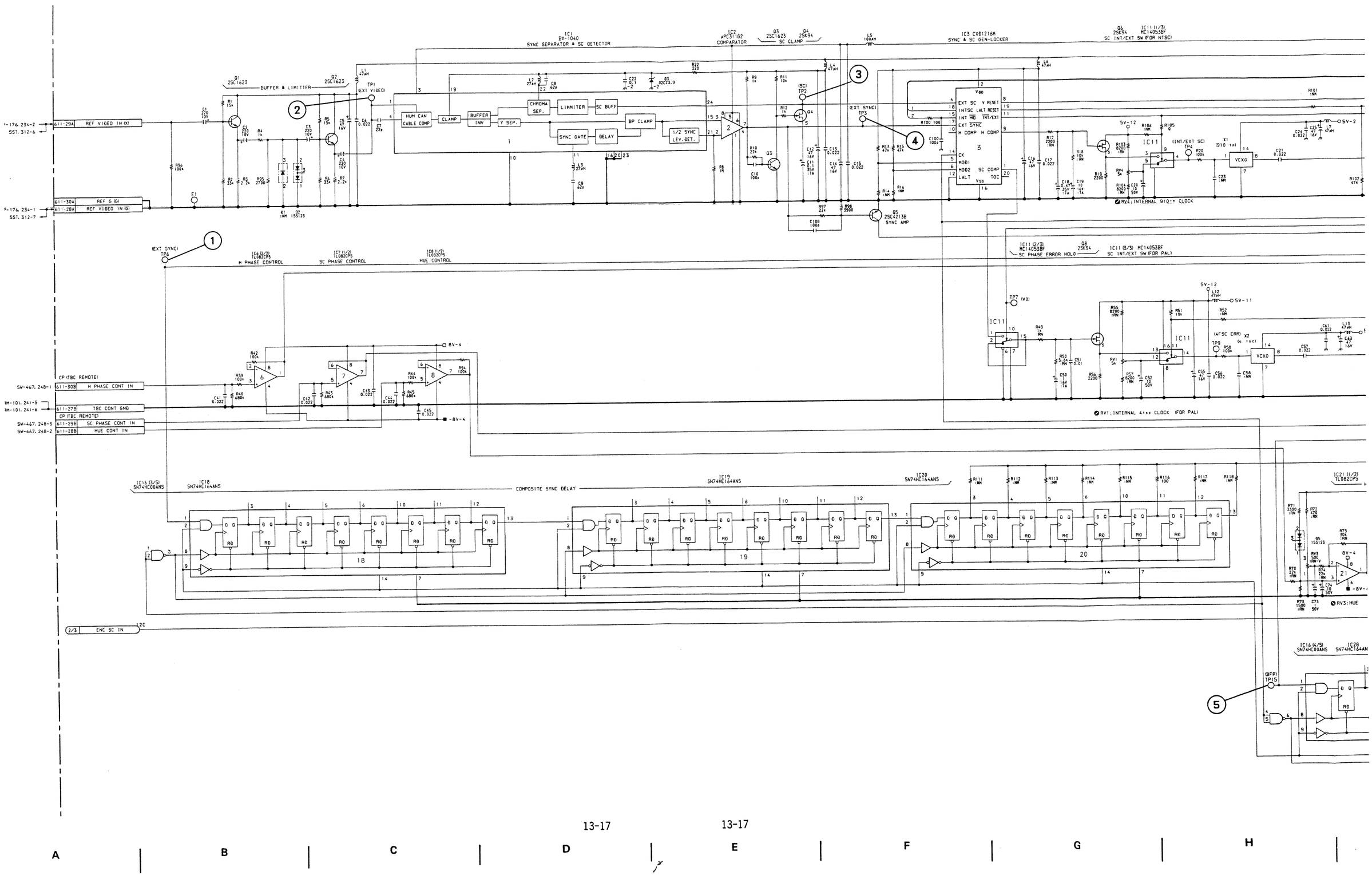
IC1 BX-1040 SYNC SEPARATOR & SC DETECTOR
IC2 μPC311G2 COMPARATOR
Q3 2SC1623 SC CLAMP
Q4 2SK94
L5 100μH
IC3 CXD1216M SYNC & SC GEN-LOCKER
Q4 2SK94 IC11 (1/3) MC14053BF SC INT/EXT SW (FOR NTSC)
Q1 2SC1623 BUFFER & LIMITTER
Q2 2SC1623
TP1 (EXT VIDEO)
HUM CAN CABLE COMP
CLAMP
BUFFER INV
Y SEP.
CHROMA SEP.
LIMMITER
SC BUFF
BP CLAMP
SYNC GATE
DELAY
1/2 SYNC LEV. DET.
(SC) TP2
(EXT SYNC) TP3
Q5 2SC4213B SYNC AMP
EXT SC V RESET
INTSC LALT RESET
INT HD INT/EXT
EXT SYNC
H COMP H COMP
CK
MOD1
MOD2 SC COMP
LALT TGC
VCXO
(INT/EXT SC) TP4
RV4: INTERNAL 910fh CLOCK
(EXT SYNC) TP6
IC6 (2/2) TL082CPS H PHASE CONTROL
IC7 (1/2) TL082CPS SC PHASE CONTROL
IC8 (1/2) TL082CPS HUE CONTROL
IC11 (2/3) MC14053BF SC PHASE ERROR HOLD
Q8 2SK94
IC11 (3/3) MC14053BF SC INT/EXT SW (FOR PAL)
TP7 (VD)
(4FSC ERR) TP9
RV1: INTERNAL 4fsc CLOCK (FOR PAL)
CP (TBC REMOTE)
611-30B H PHASE CONT IN
611-27B TBC CONT GND
611-29B SC PHASE CONT IN
611-28B HUE CONT IN
611-29A REF VIDEO IN (X)
611-30A REF G (G)
611-28A REF VIDEO IN (G)
E1
8V-4
-8V-4
IC16 (3/5) SN74HC00ANS
IC18 SN74HC164ANS
IC19 SN74HC164ANS
IC20 SN74HC164ANS
COMPOSITE SYNC DELAY
IC21 (1/2) TL082CPS
RV3: HUE
IC16 (4/5) SN74HC00ANS
IC28 SN74HC164AN
FP1 TP15
2/3 ENC SC IN
1 2 3 4 5

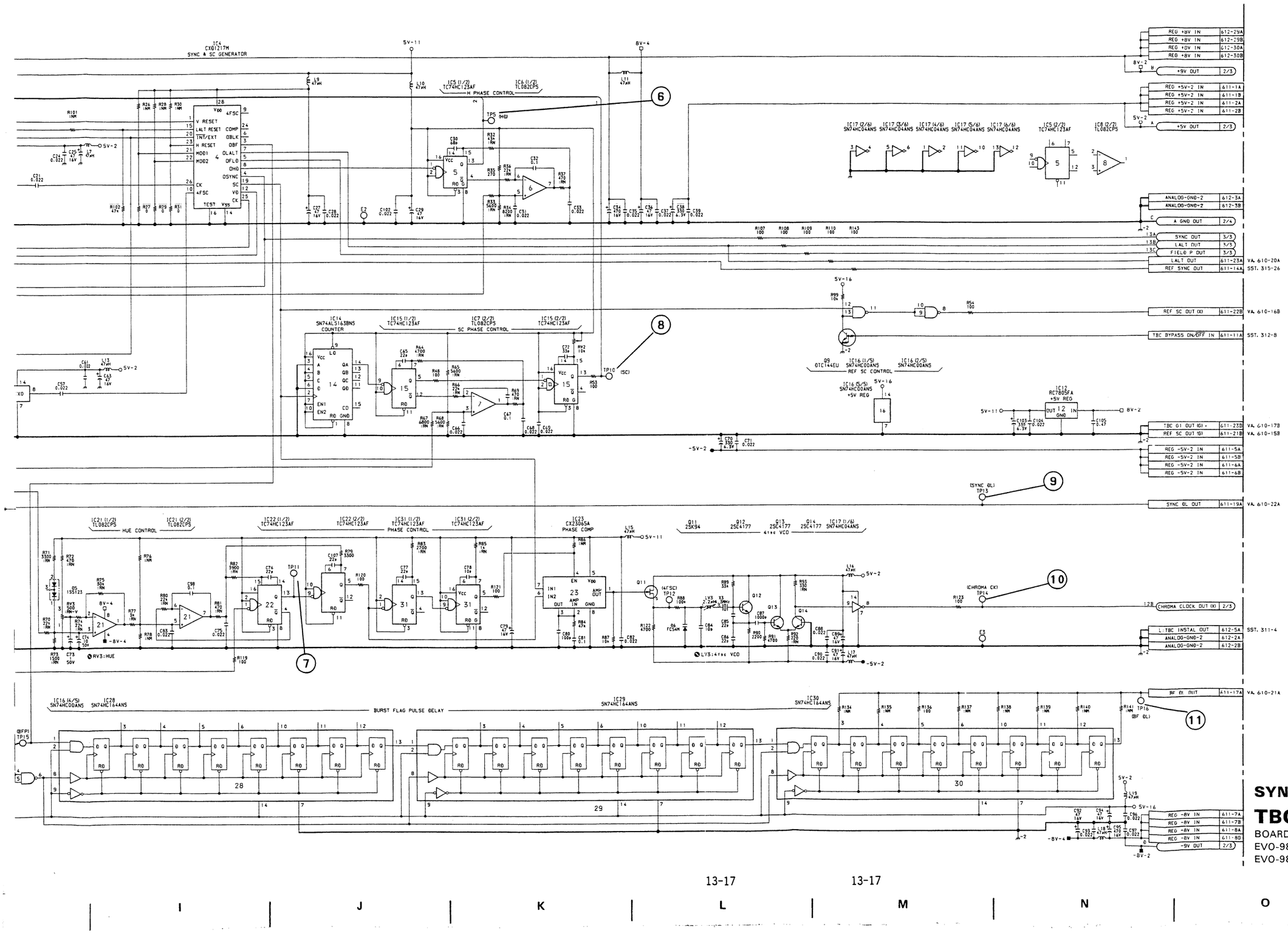

SYNC & SC Generator

TBC-21 BOARD (1/3)

BOARD NO. 1-642-949-11
EVO-9850 (J) : # 10001—
EVO-9850 (UC) : # 10031—

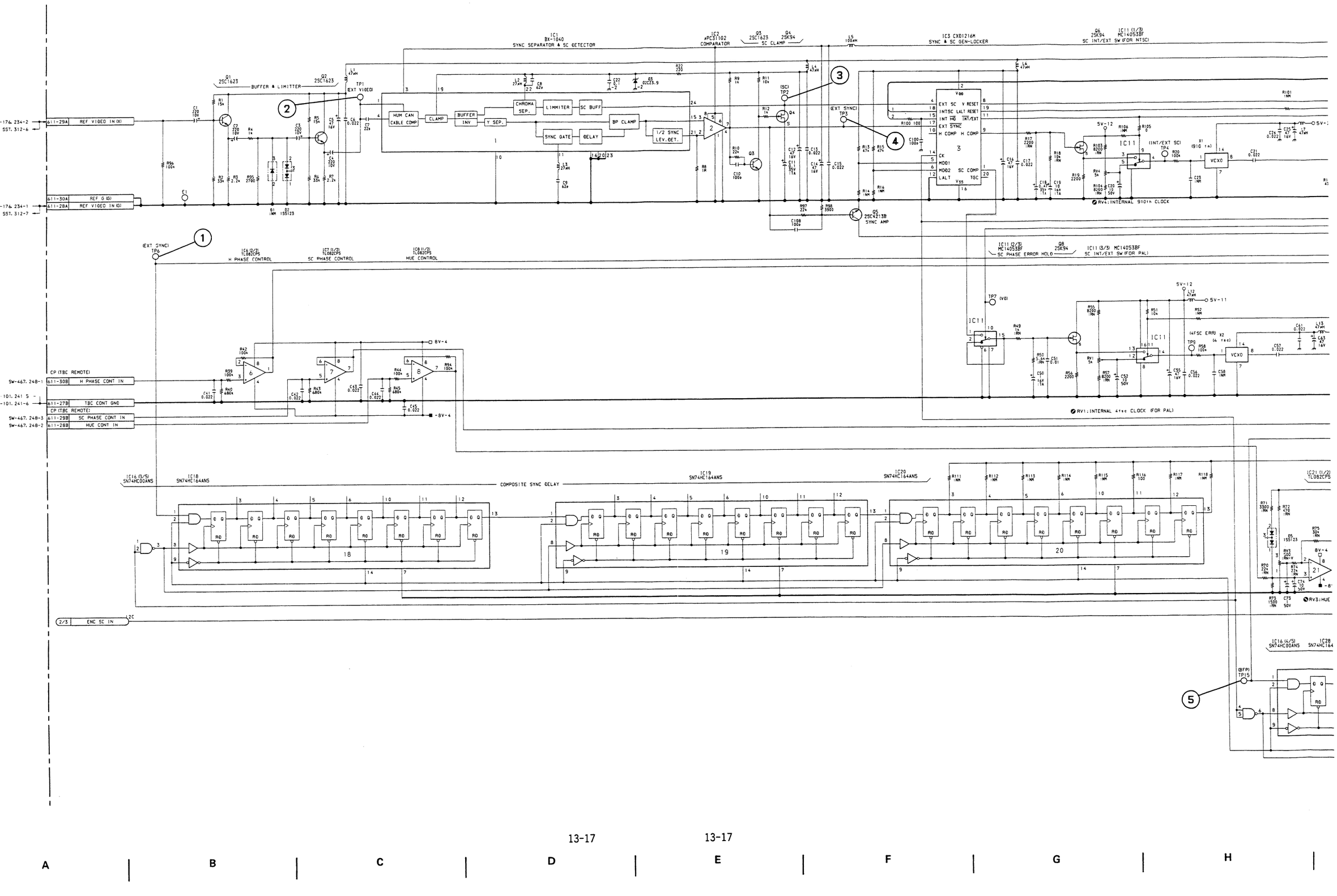
IC1 BX-1040 SYNC SEPARATOR & SC DETECTOR
IC2 APC3112 COMPARATOR
Q3 2SC1623 SC CLAMP
Q4 2SK94
IC3 CXD1216M SYNC & SC GEN-LOCKER
Q6 2SK94 SC INT/EXT SW (FOR NTSC)
IC11 (1/3) MC14053BF
Q1 2SC1623 BUFFER & LIMITTER
Q2 2SC1623
HUM CAN CABLE COMP
CLAMP
BUFFER INV
Y SEP.
CHROMA SEP.
LIMMITER
SC BUFF
BP CLAMP
SYNC GATE
DELAY
1/2 SYNC LEV. DET.
Q5 2SC4213B SYNC AMP
EXT SC
INTSC
INT HD
EXT SYNC
H COMP
SC COMP
CK
MOD1
MOD2
LALT
TGC
RV4:INTERNAL 910fh CLOCK
IC11 (2/3) MC14053BF SC PHASE ERROR HOLD
Q8 2SK94
IC11 (3/3) MC14053BF SC INT/EXT SW (FOR PAL)
RV1:INTERNAL 4fsc CLOCK (FOR PAL)
IC6 (2/2) TL082CPS H PHASE CONTROL
IC7 (1/2) TL082CPS SC PHASE CONTROL
IC8 (1/2) TL082CPS HUE CONTROL
CP-176, 234-2 SST. 312-6
CP-176, 234-1 SST. 312-7
611-29A REF VIDEO IN (X)
611-30A REF G (G)
611-28A REF VIDEO IN (G)
CP (TBC REMOTE)
SW-467, 248-1 611-30B H PHASE CONT IN
RM-101, 241 5 - RM-101, 241-6 611-27B TBC CONT GND
CP (TBC REMOTE)
SW-467, 248-3 611-29B SC PHASE CONT IN
SW-467, 248-2 611-28B HUE CONT IN
2/3 ENC SC IN
IC14 (3/5) SN74HC00ANS
IC18 SN74HC164ANS
IC19 SN74HC164ANS
IC20 SN74HC164ANS
COMPOSITE SYNC DELAY
IC21 (1/2) TL082CPS
RV3:HUE
IC16 (4/5) SN74HC00ANS
IC28 SN74HC164
(EXT SYNC) TP6
(EXT VIDEO) TP1
(SC) TP2
(EXT SYNC) TP3
(INT/EXT SC) TP4
(4FSC ERR) TP5
(V0) TP7
(BFP) TP15
8V-4
-8V-4
5V-12
5V-11
-8V-
1 2 3 4 5

A B C D E F G H

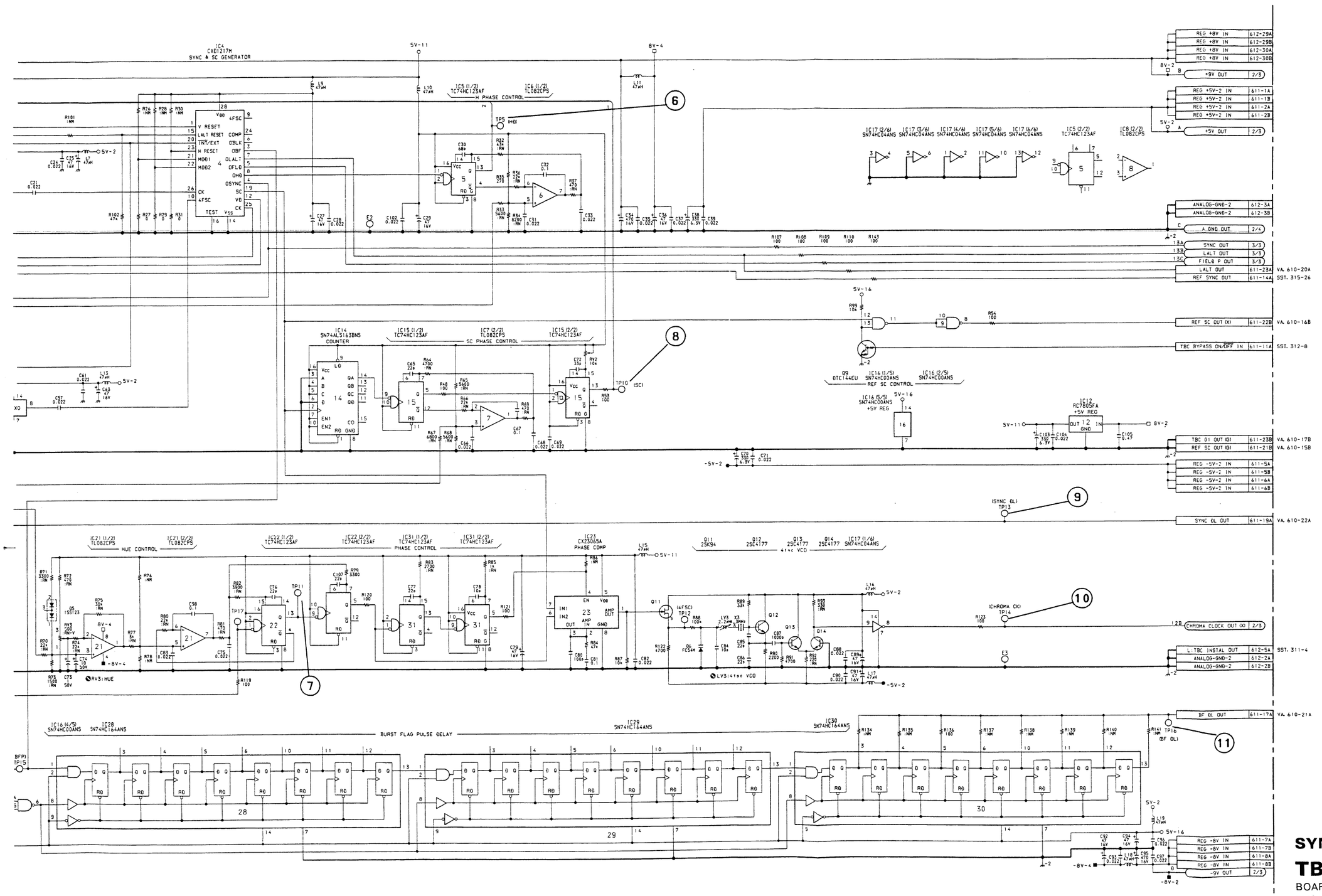

SYNC & SC Generator

TBC-21 BOARD (1/3)

BOARD NO. 1-642-949-11, 12
EVO-9850 (J) : # 10001—
EVO-9850 (UC) : # 10031—

① TP403 PB mode

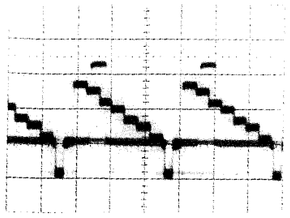

0.5v/div 20μsec/div

② TP402 PB mode

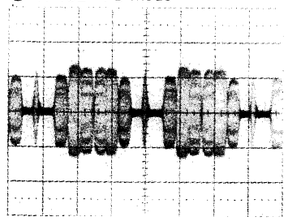

0.5v/div 20μsec/div

③ TP404 EE mode

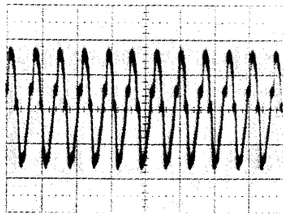

0.05v/div 0.1μsec/div

④ TP405 EE mode

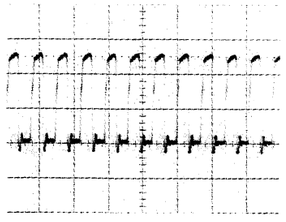

2v/div 0.1μsec/div

⑤ TP407 EE mode

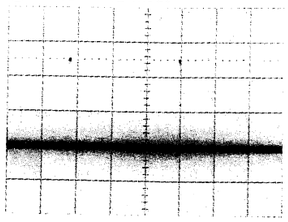

2v/div 20μsec/div

⑥ TP406 EE mode

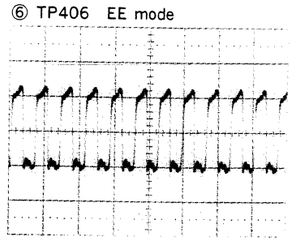

2v/div 0.1μsec/div

⑦ TP409 EE mode

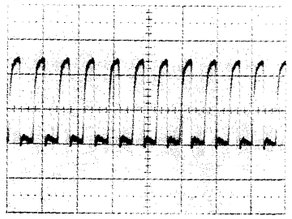

2v/div 0.1μsec/div

⑧ TP410 PB mode

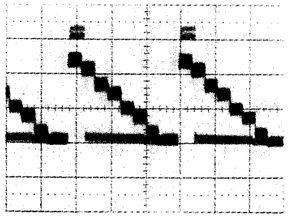

0.2v/div 20μsec/div

⑨ TP411 PB mode

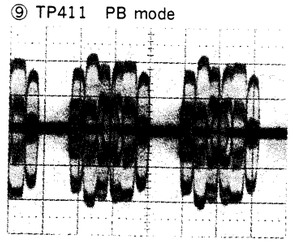

0.2v/div 20μsec/div

Measurement Condition
VIDEO IN: 75% color bars
PB mode: (WR5-8NSE: color bars)
EE mode

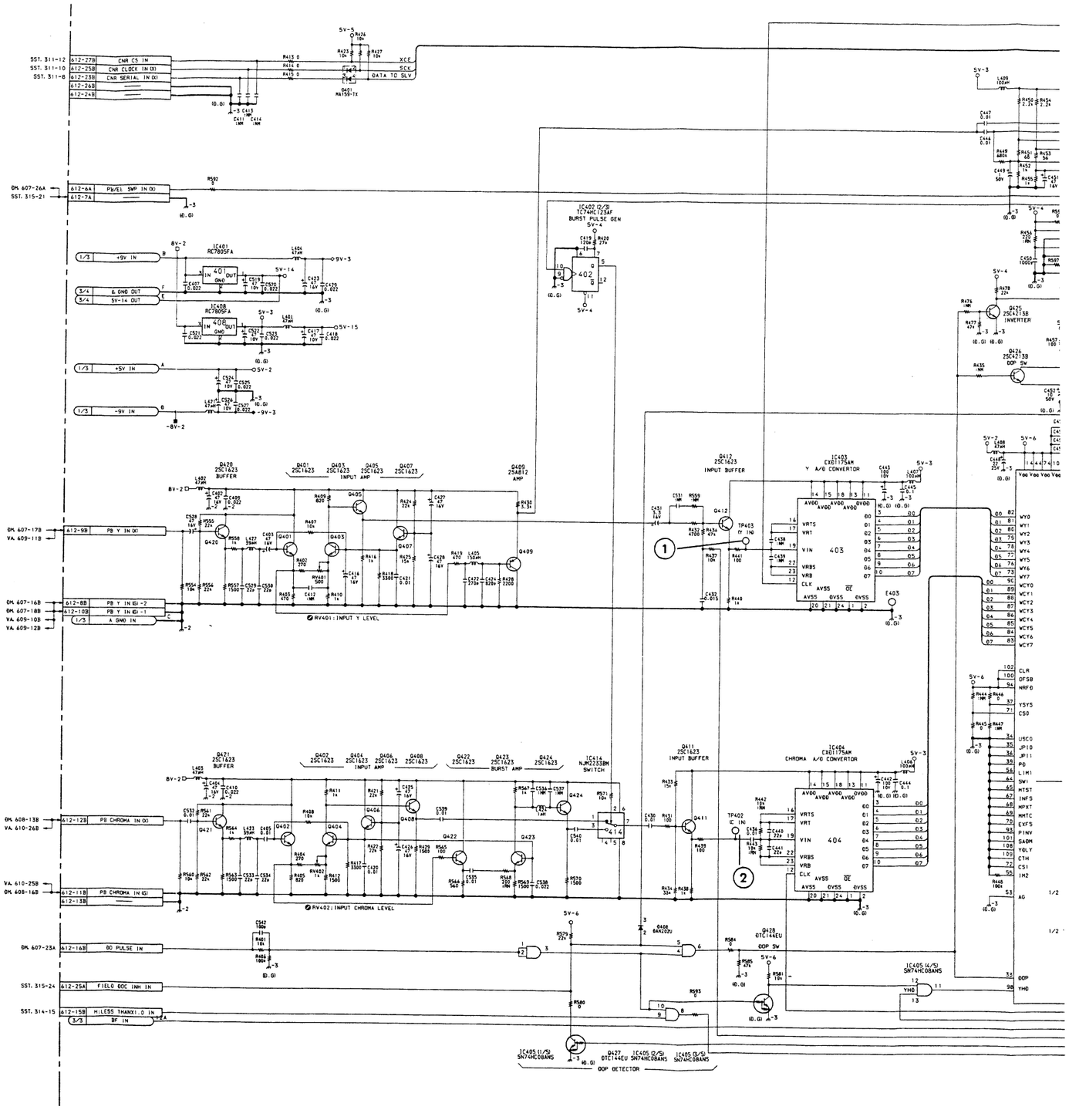

13-19 13-19

A B C D E F G H

TBC-21 (2/3) TBC-21 (2/3)

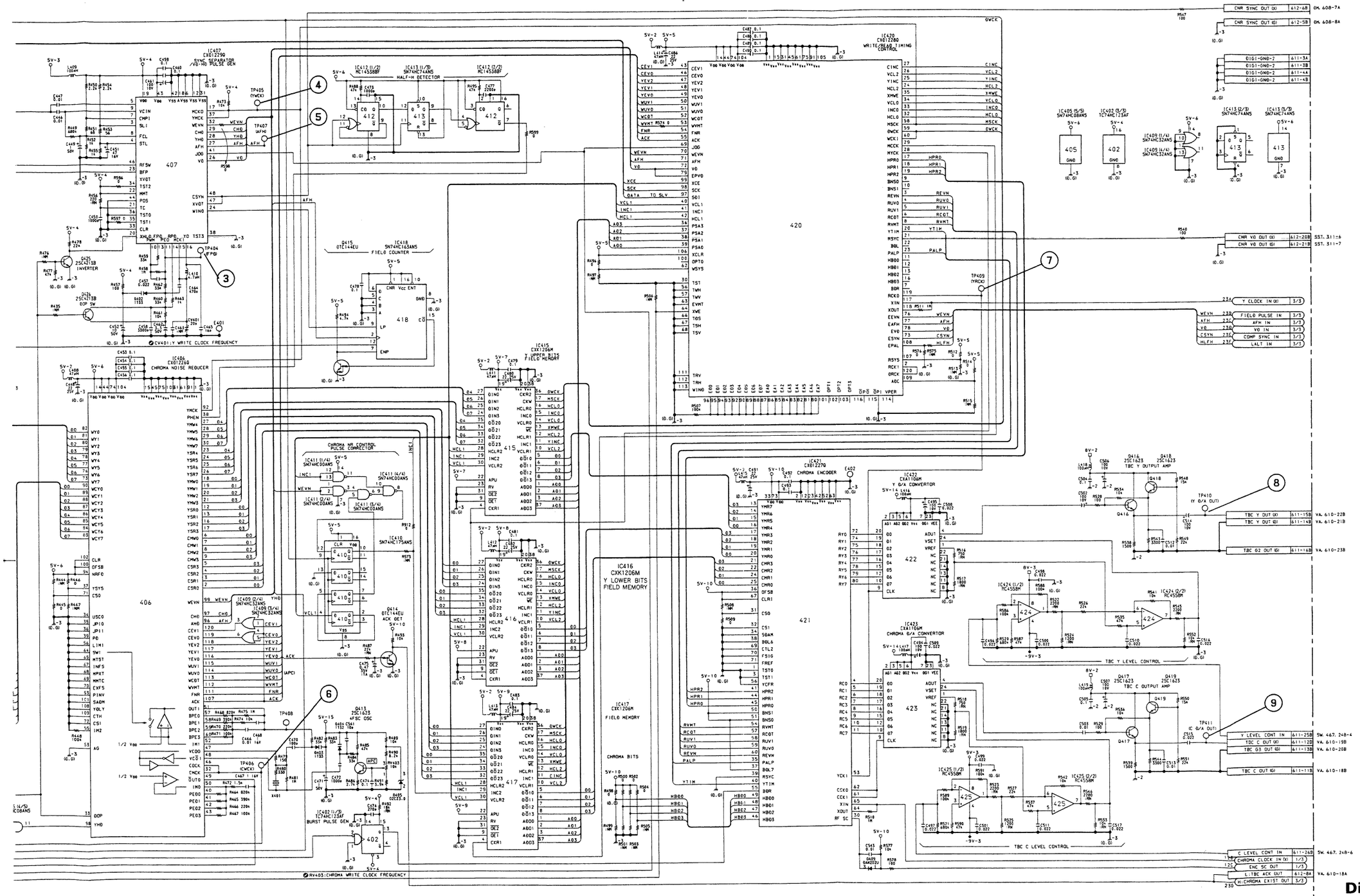

13-19 13-19

Digital Y/C Signal Proces

TBC-21 BOARD (2/

BOARD NO. 1-642-949-11
EVO-9850 (J) : #10001—
EVO-9850 (UC) : #10031—

I J K L M N O P

TBC-21 (2/3)

① TP403 PB mode

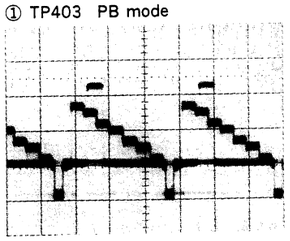

0.5v/div 20μsec/div

② TP402 PB mode

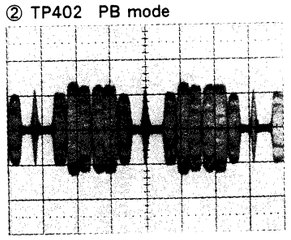

0.5v/div 20μsec/div

③ TP404 EE mode

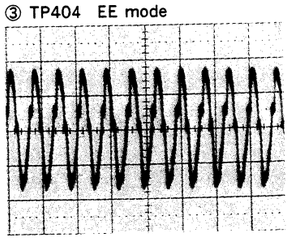

0.05v/div 0.1μsec/div

④ TP405 EE mode

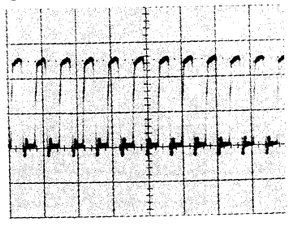

2v/div 0.1μsec/div

⑤ TP407 EE mode

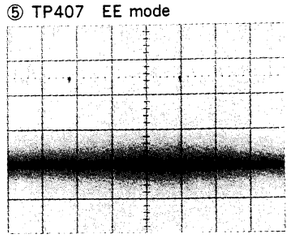

2v/div 20μsec/div

⑥ TP406 EE mode

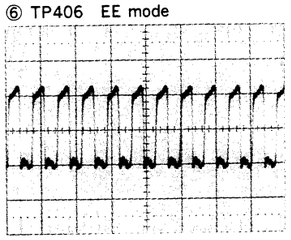

2v/div 0.1μsec/div

⑦ TP409 EE mode

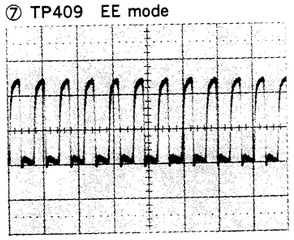

2v/div 0.1μsec/div

⑧ TP410 PB mode

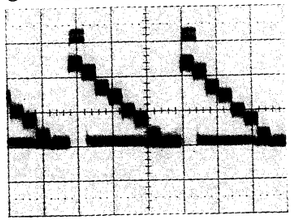

0.2v/div 20μsec/div

⑨ TP411 PB mode

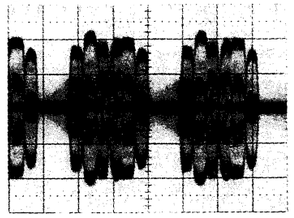

0.2v/div 20μsec/div

Measurement Condition

VIDEO IN: 75% color bars

PB mode: (WR5-8NSE: color bars)

EE mode

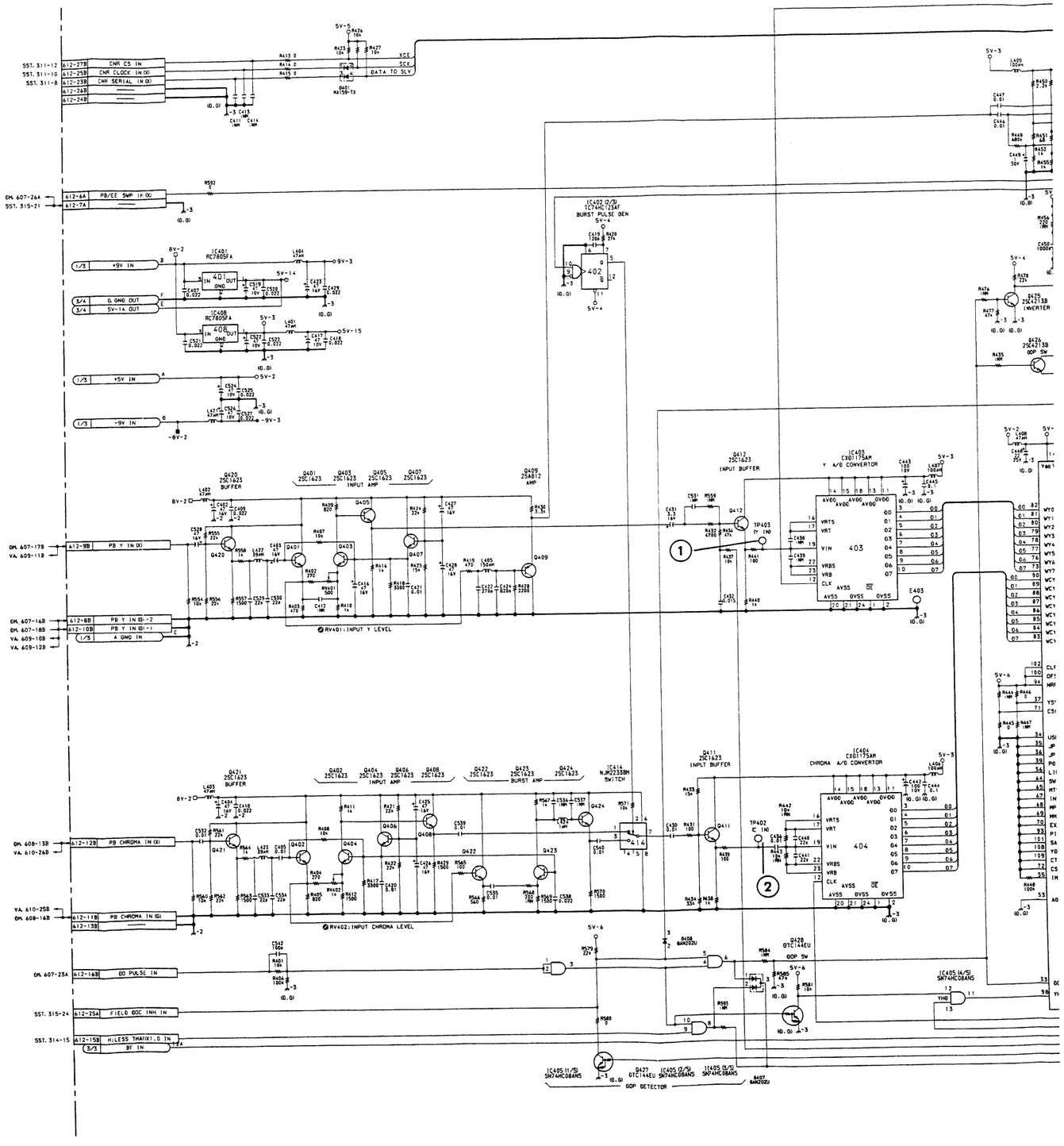

13-19

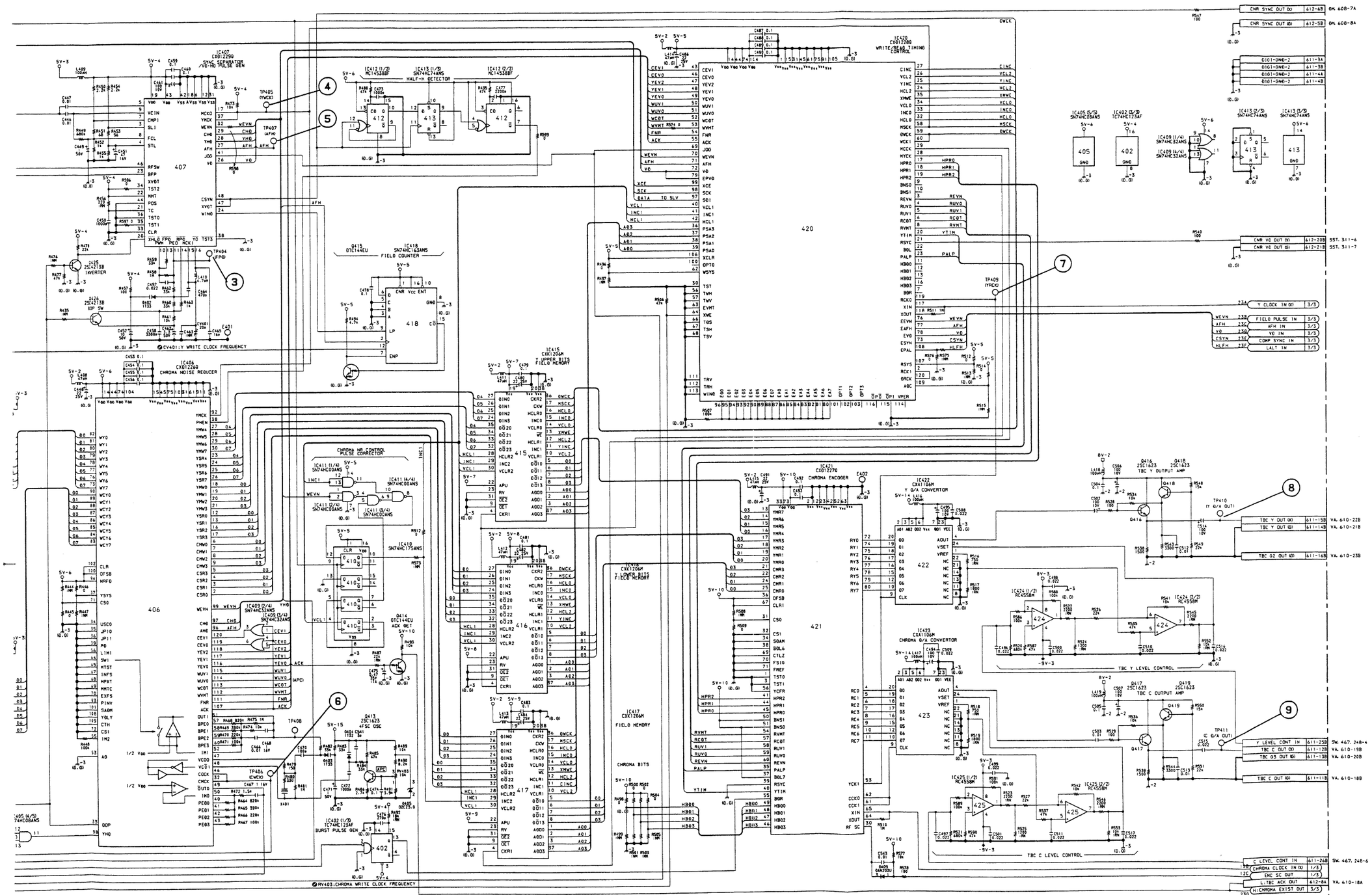

Digital Y/C Signal Proces

TBC-21 BOARD (2/3

BOARD NO. 1-642-949-11, 12
EVO-9850 (J) : # 10001—
EVO-9850 (UC) : # 10031—

① TP706 EE mode

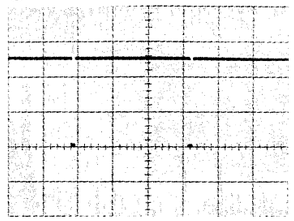

2v/div 5msec/div

② TP707 EE mode

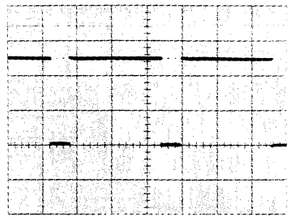

2v/div 20μsec/div

③ TP701 EE mode

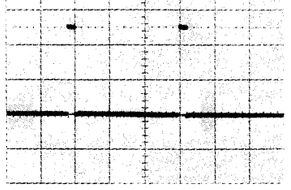

2v/div 20μsec/div

④ TP704 EE mode

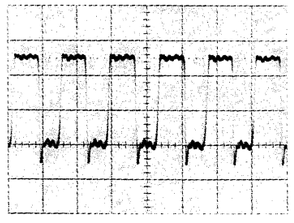

2v/div 0.05μsec/div

⑤ CN611-21A EE mode

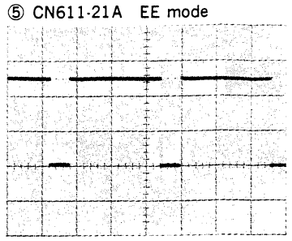

2v/div 20μsec/div

Measurement Condition
VIDEO IN: 75% color bars
EE mode

13-20

13-20

TBC-21 (3/3)

① TP706 EE mode

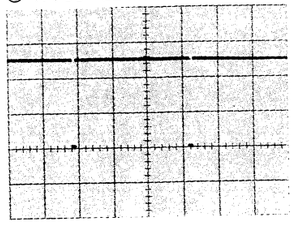

2v/div 5msec/div

② TP707 EE mode

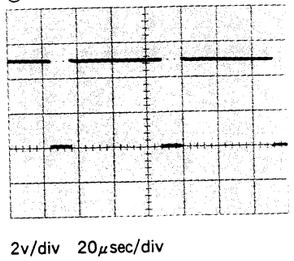

2v/div 20μsec/div

③ TP701 EE mode

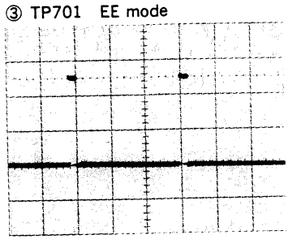

2v/div 20μsec/div

④ TP704 EE mode

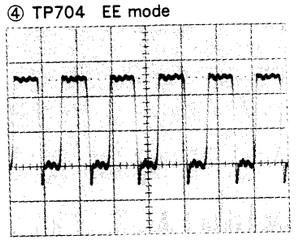

2v/div 0.05μsec/div

⑤ CN611-21A EE mode

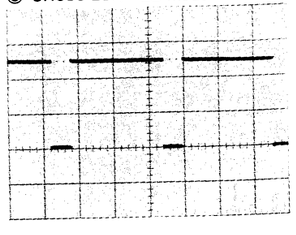

2v/div 20μsec/div

Measurement Condition
VIDEO IN: 75% color bars
EE mode

13-20

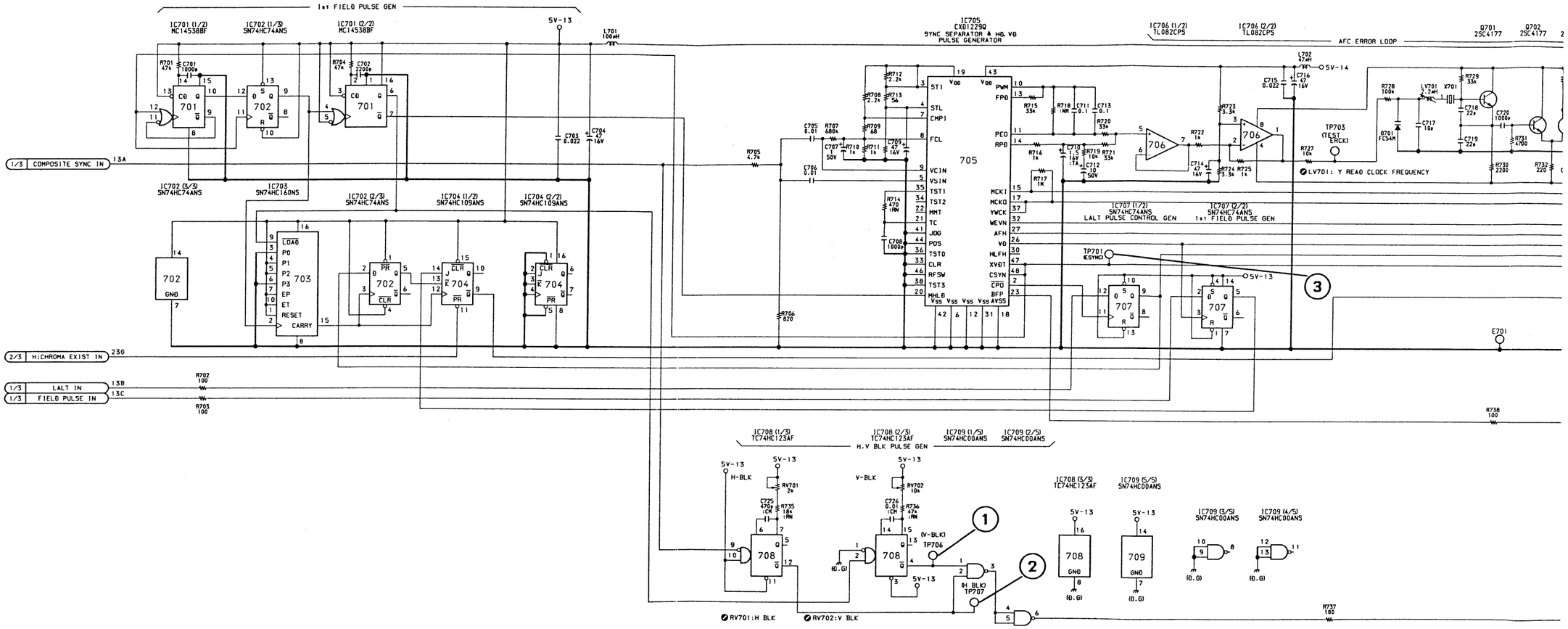
1st FIELD PULSE GEN
IC701 (1/2) MC14538BF
IC702 (1/3) SN74HC74ANS
IC701 (2/2) MC14538BF
5V-13
L701 100uH
IC705 CX01229Q SYNC SEPARATOR & HD, VD PULSE GENERATOR
IC706 (1/2) TL082CPS
IC706 (2/2) TL082CPS
AFC ERROR LOOP
Q701 2SC4177
Q702 2SC4177
1/3 COMPOSITE SYNC IN 13A
IC702 (3/3) SN74HC74ANS
IC703 SN74HC160NS
IC702 (2/3) SN74HC74ANS
IC704 (1/2) SN74HC109ANS
IC704 (2/2) SN74HC109ANS
2/3 H:CHROMA EXIST IN 23G
1/3 LALT IN 13B
1/3 FIELD PULSE IN 13C
IC707 (1/2) SN74HC74ANS LALT PULSE CONTROL GEN
IC707 (2/2) SN74HC74ANS 1st FIELD PULSE GEN
TP701 (SYNC)
5V-13
5V-14
3
E701
LV701: Y READ CLOCK FREQUENCY
TP703 (TEST CHECK)
IC708 (1/3) TC74HC123AF
IC708 (2/3) TC74HC123AF H.V BLK PULSE GEN
IC709 (1/5) SN74HC00ANS
IC709 (2/5) SN74HC00ANS
H-BLK
V-BLK
RV701 2k
RV702 10k
RV701:H BLK
RV702:V BLK
(V-BLK) TP706
(H BLK) TP707
1
2
IC708 (3/3) TC74HC123AF
IC709 (5/5) SN74HC00ANS
IC709 (3/5) SN74HC00ANS
IC709 (4/5) SN74HC00ANS
(0.G)

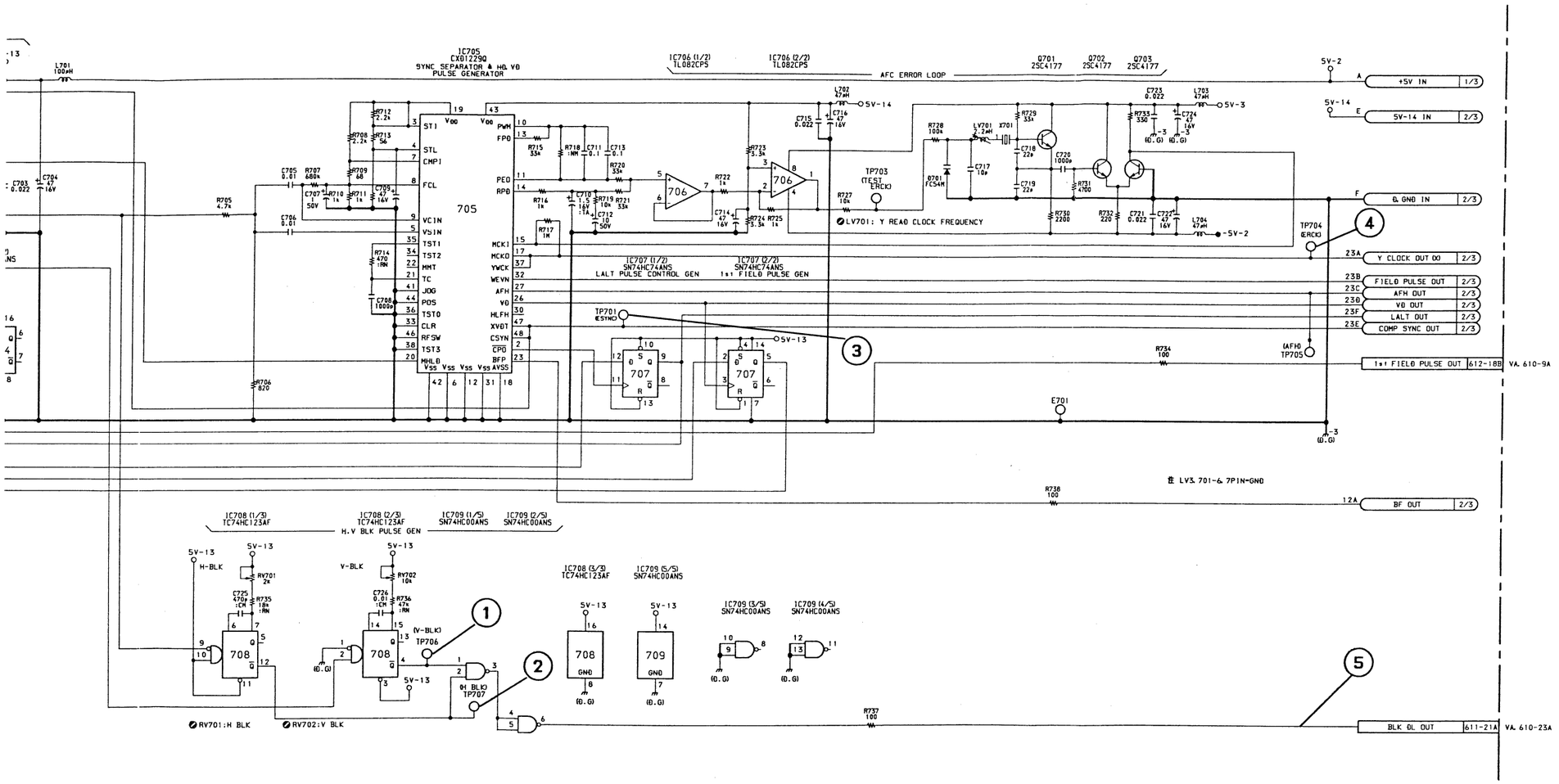

Read Timming Control Pulse Generator

TBC-21 BOARD (3/3)

BOARD NO. 1-642-949-11
EVO-9850 (J) : # 10001–
EVO-9850 (UC) : # 10031–

VA-111 (1-642-948-11)

CN609	D-6	Q105	E-3 *	Q804	H-5 *	TP805	J-2
CN610	J-6	Q106	E-2 *	Q805	H-5 *		
		Q107	D-3 *	Q806	G-2 *	X101	K-1
CV101	K-1	Q108	E-3 *	Q807	G-2 *		
		Q109	E-3 *	Q808	G-2 *	* mark ; B SIDE mount.	
D101	E-1	Q110	E-3 *	Q809	G-3 *		
D102	E-1	Q111	E-2 *	Q810	H-2 *		
D103	E-1	Q112	D-3 *	Q811	G-2 *		
D104	E-1	Q113	D-2 *	Q812	J-1 *		
D105	D-4	Q114	C-1 *	Q813	H-1 *		
D106	D-4	Q115	C-1 *	Q814	H-1 *		
D107	A-3 *	Q116	C-1 *	Q815	G-1 *		
D108	D-3 *	Q117	C-1 *	Q816	G-1 *		
D109	D-3 *	Q118	F-1 *	Q817	J-5 *		
D110	L-4	Q119	E-5	Q818	K-5 *		
D801	H-2 *	Q120	F-1 *	Q819	K-2 *		
D802	H-4 *	Q121	D-2 *				
D803	H-4 *	Q122	D-1 *	RV101	F-4		
		Q123	L-1 *	RV102	E-2		
DL101	L-2	Q124	L-3 *	RV103	D-2		
DL103	N-5	Q125	L-2 *	RV104	E-2		
		Q126	L-6 *	RV105	D-1		
E101	D-3	Q127	L-5 *	RV106	M-6		
E102	F-1	Q129	M-5 *	RV107	L-4		
E103	M-4	Q130	M-5 *	RV108	C-5		
E104	D-5	Q131	L-5 *	RV109	C-4		
E105	A-5	Q132	L-5 *	RV110	A-2		
E106	M-5	Q133	L-5 *	RV111	A-4		
E801	H-4	Q134	L-5 *	RV802	F-5		
E802	G-1	Q135	L-5 *	RV803	H-3		
		Q136	E-4 *	RV805	K-4		
FL101	L-4	Q137	E-5 *	RV806	J-4		
FL102	E-5	Q138	D-5 *	RV807	G-2		
FL103	L-6	Q139	D-5 *	RV808	H-2		
FL104	D-5	Q140	D-5 *				
FL801	F-2	Q141	C-4 *	S101	K-2		
FL802	H-1	Q142	C-5 *	S102	M-5		
		Q143	D-5 *				
IC101	E-5	Q144	C-5 *	TP101	E-4		
IC102	F-4	Q145	C-5 *	TP102	E-3		
IC103	F-2	Q146	C-4 *	TP103	E-2		
IC104	B-2	Q147	C-5 *	TP104	C-2		
IC105	F-2	Q148	C-5 *	TP105	B-2		
IC106	E-1	Q149	A-2 *	TP106	E-2		
IC107	D-2	Q151	A-2	TP107	E-2		
IC108	B-3	Q152	A-3 *	TP108	D-2		
IC109	L-4	Q153	A-2 *	TP109	C-2		
IC110	L-5	Q154	A-2 *	TP110	B-3		
IC111	D-4	Q155	A-2 *	TP111	M-2		
IC112	B-5	Q156	A-3 *	TP112	M-2		
IC113	A-2	Q157	B-3 *	TP113	M-5		
IC114	A-5	Q158	B-2 *	TP114	K-5		
IC115	A-1	Q159	B-3 *	TP115	L-5		
IC116	L-1	Q160	B-4 *	TP116	D-5		
IC117	L-5	Q161	A-4 *	TP117	C-4		
IC801	G-5	Q162	A-4 *	TP118	C-5		
IC802	H-4	Q171	M-3 *	TP119	B-5		
IC803	G-4	Q172	L-5 *	TP120	B-5		
IC804	G-2	Q173	L-5 *	TP121	A-2		
IC805	H-2	Q174	N-3 *	TP122	A-4		
IC806	G-5	Q175	L-4	TP123	A-5		
IC807	F-5	Q176	L-2 *	TP124	A-5		
IC808	J-5	Q177	L-3 *	TP125	K-5		
IC809	J-4	Q178	L-5 *	TP126	K-4		
		Q179	M-3 *	TP601	M-3		
Q101	E-5 *	Q180	L-5	TP801	G-3		
Q102	F-5 *	Q801	H-5 *	TP802	G-2		
Q103	E-5 *	Q802	H-5 *	TP803	F-3		
Q104	E-3 *	Q803	H-5 *	TP804	G-1		

VA-111 BOARD
A Side

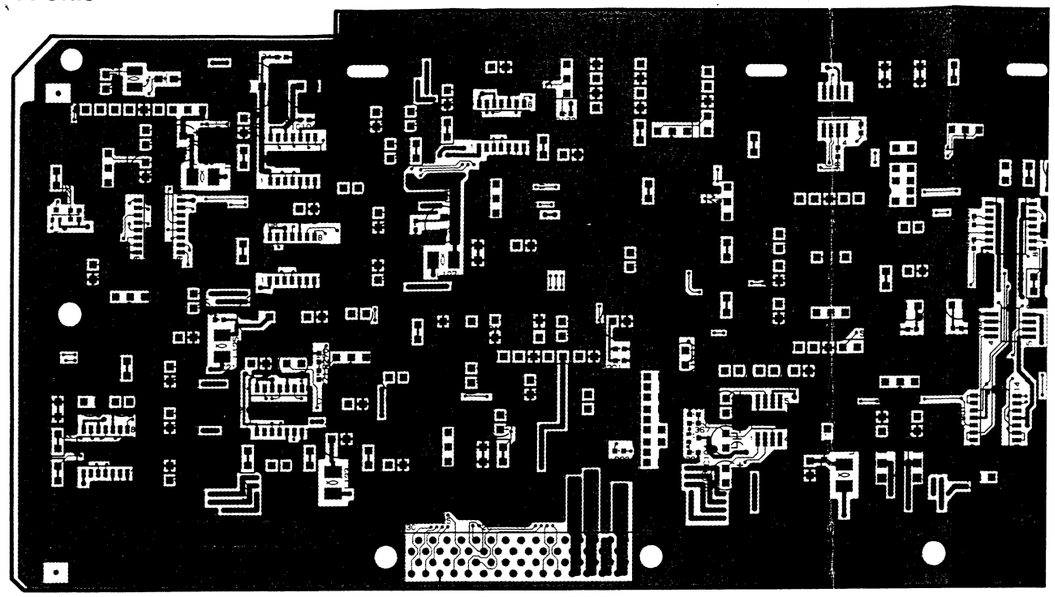

1-642-948-11 A SIDE

A Side is the same as Component Side

VA-111 BOARD
B Side

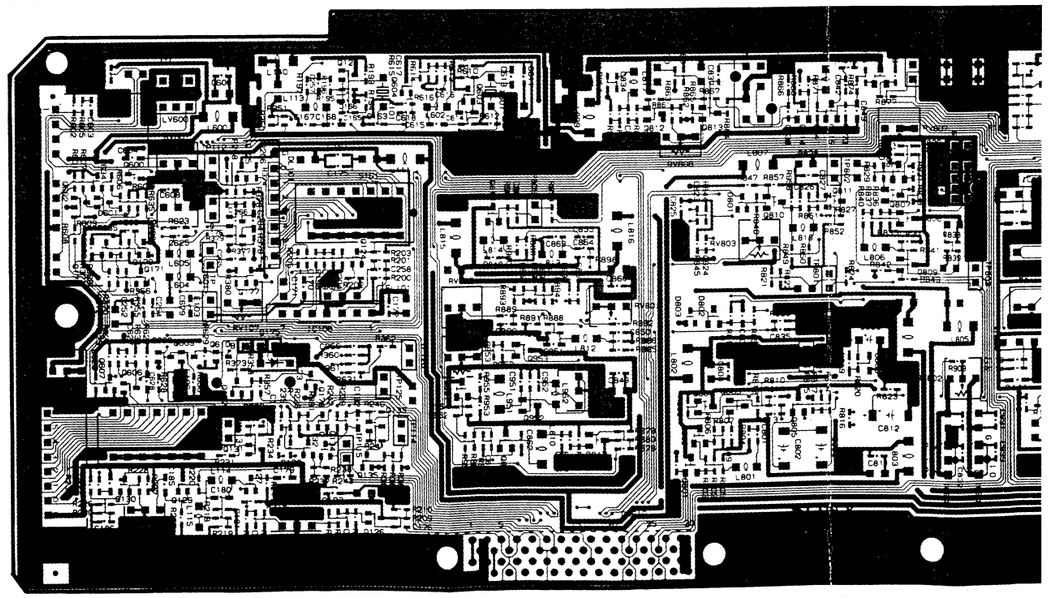

1-642-948-11 B SIDE

B Side is the same as Soldering Side

VA-111 BOARD
A Side

* TP805 J-2

X101 K-1

* mark ; B SIDE mount.

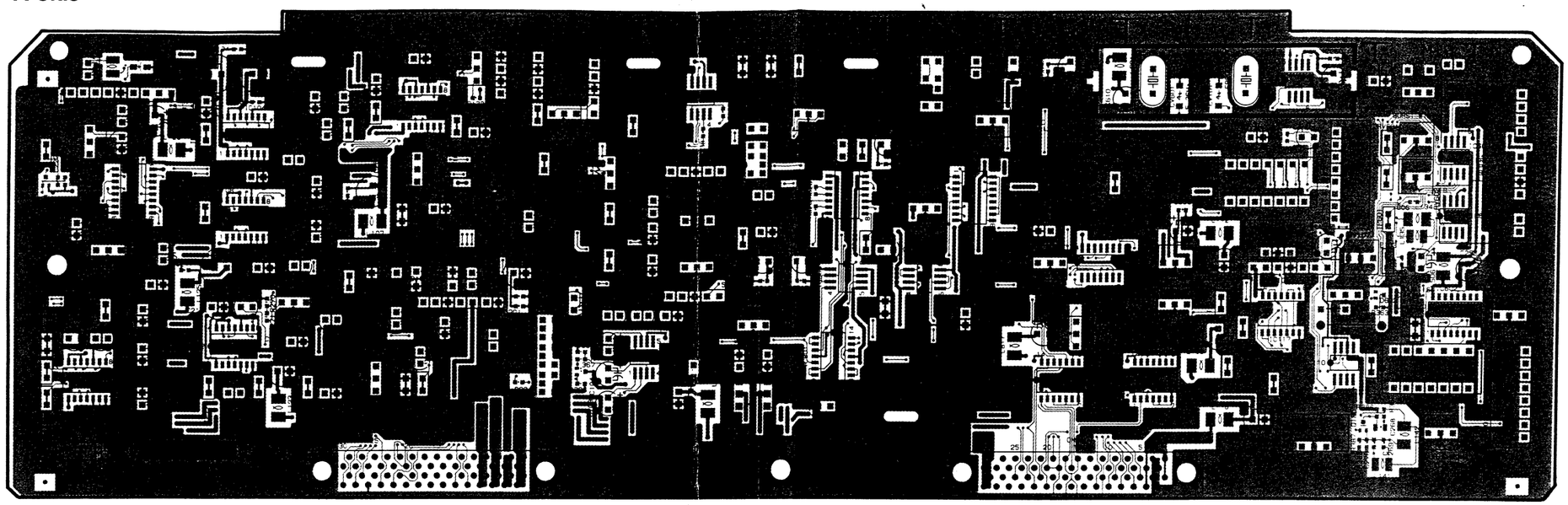

1-642-948-11 A SIDE

A Side is the same as Component Side

VA-111 BOARD
B Side

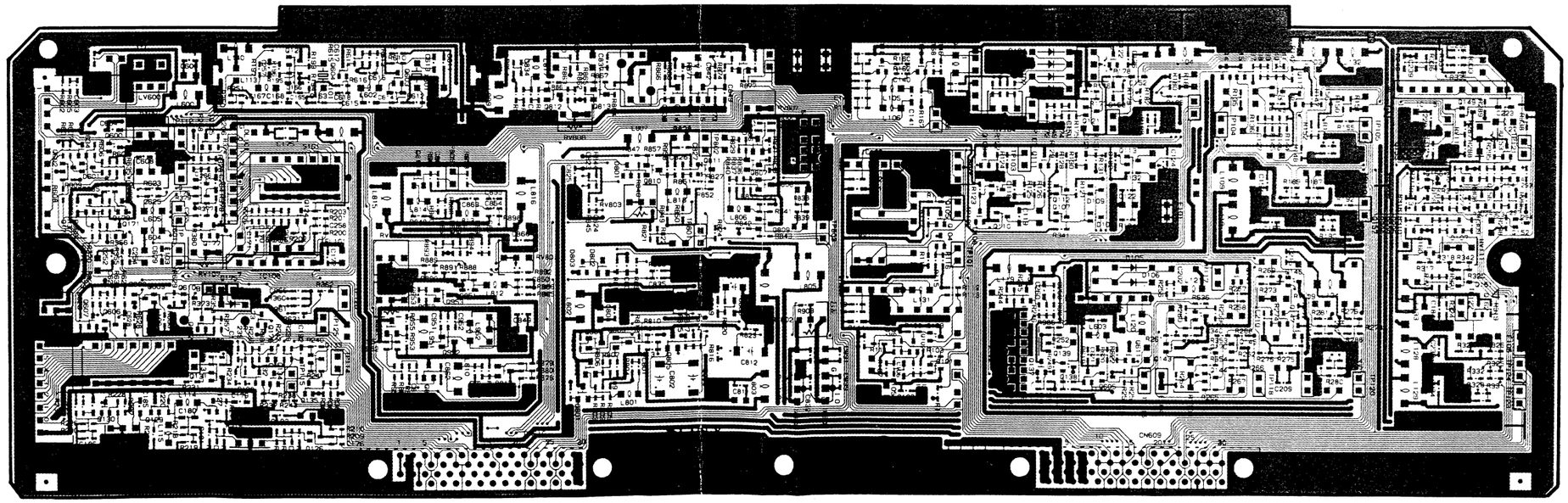

1-642-948-11 B SIDE

B Side is the same as Soldering Side

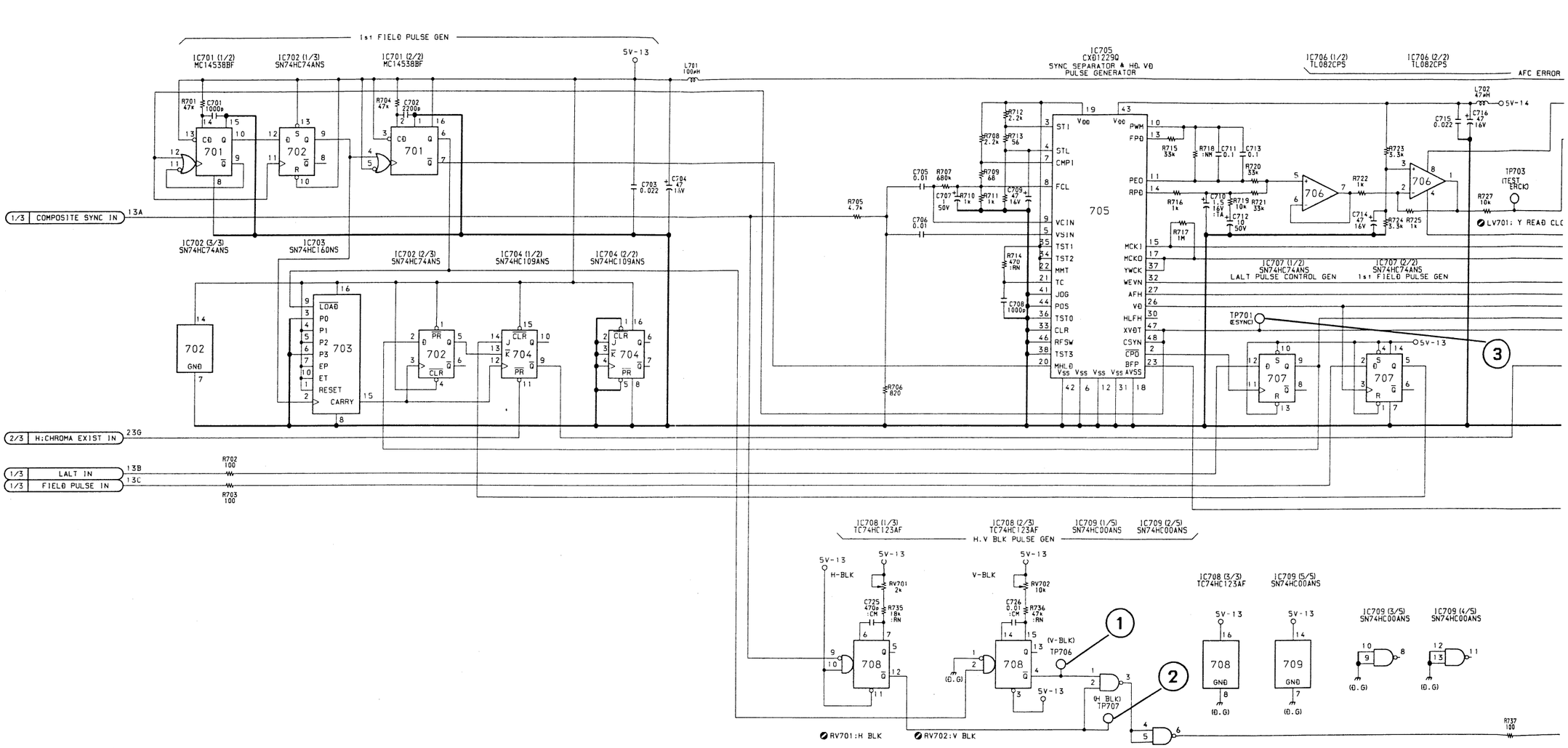
1st FIELD PULSE GEN
IC701 (1/2) MC14538BF
IC702 (1/3) SN74HC74ANS
IC701 (2/2) MC14538BF
5V-13
L781 100μH
IC705 CX012290 SYNC SEPARATOR & H&V Ø PULSE GENERATOR
IC706 (1/2) TL082CPS
IC706 (2/2) TL082CPS
AFC ERROR
L702 47μH
5V-14
C715 0.022
C716 47 16V
TP703 (TEST EXCIO)
LV701: Y READ CLO
1/3 COMPOSITE SYNC IN 13A
IC702 (3/3) SN74HC74ANS
IC703 SN74HC160NS
IC702 (2/3) SN74HC74ANS
IC704 (1/2) SN74HC109ANS
IC704 (2/2) SN74HC109ANS
IC707 (1/2) SN74HC74ANS LALT PULSE CONTROL GEN
IC707 (2/2) SN74HC74ANS 1st FIELD PULSE GEN
TP701 (ESYNC)
5V-13
2/3 H:CHROMA EXIST IN 23G
1/3 LALT IN 13B
1/3 FIELD PULSE IN 13C
R702 100
R703 100
R737 100
IC708 (1/3) TC74HC123AF
IC708 (2/3) TC74HC123AF H.V BLK PULSE GEN
IC709 (1/5) SN74HC00ANS
IC709 (2/5) SN74HC00ANS
IC708 (3/3) TC74HC123AF
IC709 (5/5) SN74HC00ANS
IC709 (3/5) SN74HC00ANS
IC709 (4/5) SN74HC00ANS
H-BLK
V-BLK
RV701 2k
RV702 10k
(V-BLK) TP706
(H BLK) TP707
RV701:H BLK
RV702:V BLK
(D.G)
GND

A | B | C | D | E | F | G | H

TBC-21 (3/3)

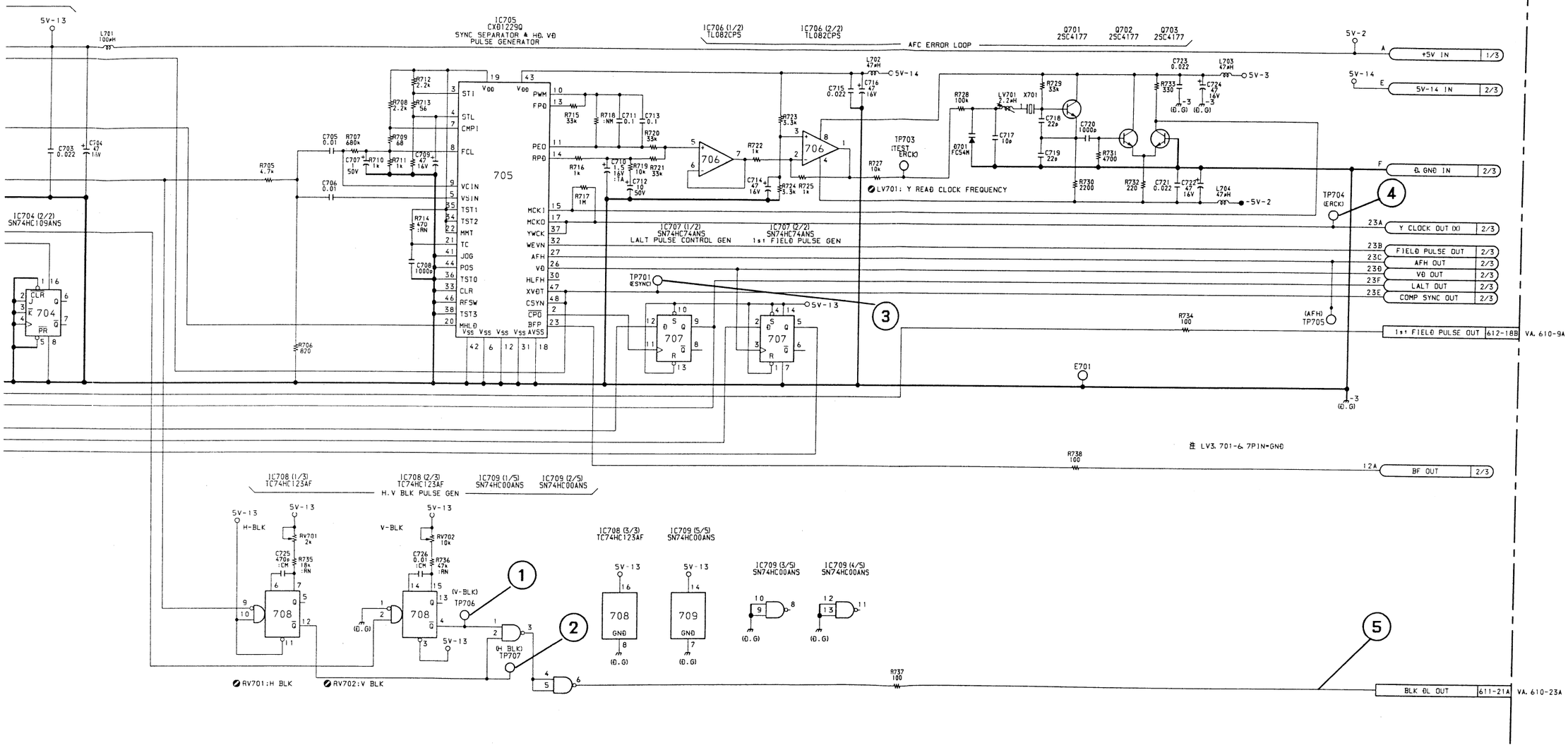

Read Timming Control Pulse Generator

TBC-21 BOARD (3/3)

BOARD NO. 1-642-949-11, 12
EVO-9850 (J) : # 10001—
EVO-9850 (UC) : # 10031—

VA-111 (1-642-948-12)

CN609	D-6	Q105	E-3 *	Q804	H-5 *	TP803	F-3
CN610	J-6	Q106	E-2 *	Q805	H-5 *	TP804	G-1
		Q107	E-3 *	Q806	G-2 *	TP805	J-2
CV101	K-1	Q108	E-3 *	Q807	G-2 *		
		Q109	E-2 *	Q808	G-2 *	X101	K-1
D101	E-1	Q110	E-3 *	Q809	G-3 *		
D102	E-1	Q111	E-2 *	Q810	H-2 *	* mark; B SIDE mount.	
D103	E-1	Q112	E-2 *	Q811	G-2 *		
D104	E-1	Q113	D-2 *	Q812	J-1 *		
D105	D-4	Q114	D-2 *	Q813	H-1 *		
D106	D-4	Q115	C-1 *	Q814	H-2 *		
D107	A-3 *	Q116	C-1 *	Q815	G-2 *		
D108	D-3 *	Q117	C-1 *	Q816	G-1 *		
D109	D-3 *	Q118	F-1 *	Q817	J-5 *		
D110	L-4	Q119	F-5	Q818	K-5 *		
D801	H-2 *	Q120	F-1 *	Q819	K-2 *		
D802	H-4 *	Q121	D-2 *	Q820	D-3 *		
D803	H-4 *	Q122	D-1 *	Q821	D-3 *		
		Q123	L-1 *				
DL101	L-2	Q124	L-3 *	RV101	F-4		
DL103	N-5	Q125	L-2 *	RV102	E-2		
		Q126	L-6 *	RV103	D-2		
E101	D-3	Q127	L-5 *	RV104	E-1		
E102	F-1	Q129	M-5 *	RV105	D-1		
E103	M-3	Q130	M-5 *	RV106	M-5		
E104	D-5	Q131	L-5 *	RV107	L-4		
E105	A-5	Q132	L-5 *	RV108	C-5		
E106	M-5	Q133	L-5 *	RV109	C-5		
E801	G-4	Q134	L-5 *	RV110	A-2		
E802	F-1	Q135	L-5 *	RV111	A-3		
		Q136	E-4 *	RV802	F-4		
FL101	L-3	Q137	E-5 *	RV803	H-2		
FL102	E-5	Q138	D-5 *	RV805	K-4		
FL103	L-5	Q139	D-5 *	RV806	J-4		
FL104	D-5	Q140	D-5 *	RV807	G-1		
FL801	G-2	Q141	C-4 *	RV808	H-1		
FL802	H-1	Q142	C-5 *				
		Q143	D-5 *	S101	K-2		
IC101	E-5	Q144	C-5 *	S102	M-5		
IC102	F-4	Q145	C-5 *				
IC103	F-2	Q146	C-4 *	TP101	E-4		
IC104	B-2	Q147	C-5 *	TP102	E-3		
IC105	F-1	Q148	B-5 *	TP103	E-2		
IC106	E-1	Q149	A-2 *	TP104	C-2		
IC107	D-2	Q151	A-3	TP105	B-2		
IC108	B-3	Q152	A-3 *	TP106	E-2		
IC109	L-4	Q153	A-2 *	TP107	E-2		
IC110	L-5	Q154	B-2 *	TP108	D-2		
IC111	D-4	Q155	B-2 *	TP109	C-2		
IC112	B-5	Q156	A-3 *	TP110	B-3		
IC113	B-2	Q157	B-3 *	TP111	M-2		
IC114	A-5	Q158	B-2 *	TP112	M-2		
IC115	A-1	Q159	B-3 *	TP113	M-5		
IC116	L-1	Q160	B-4 *	TP114	K-5		
IC117	L-5	Q161	A-4 *	TP115	L-5		
IC801	G-5	Q162	A-4 *	TP116	D-5		
IC802	H-4	Q171	M-3 *	TP117	C-4		
IC803	G-4	Q172	M-5 *	TP118	C-5		
IC804	G-2	Q173	L-5 *	TP119	B-5		
IC805	H-2	Q174	N-3 *	TP120	B-5		
IC806	G-5	Q175	L-4	TP121	A-2		
IC807	F-5	Q176	M-3 *	TP122	A-4		
IC808	J-5	Q177	L-4 *	TP123	A-5		
IC809	J-4	Q178	L-5 *	TP124	A-5		
		Q179	M-3 *	TP125	K-5		
Q101	E-5 *	Q180	L-5	TP126	K-4		
Q102	F-5 *	Q801	H-5 *	TP601	M-3		
Q103	E-5 *	Q802	H-5 *	TP801	G-3		
Q104	E-3 *	Q803	H-5 *	TP802	G-2		

VA-111 BOARD
A Side

Serial No.: (J) 10031 and higher
Serial No.: (UC) 10251 and higher

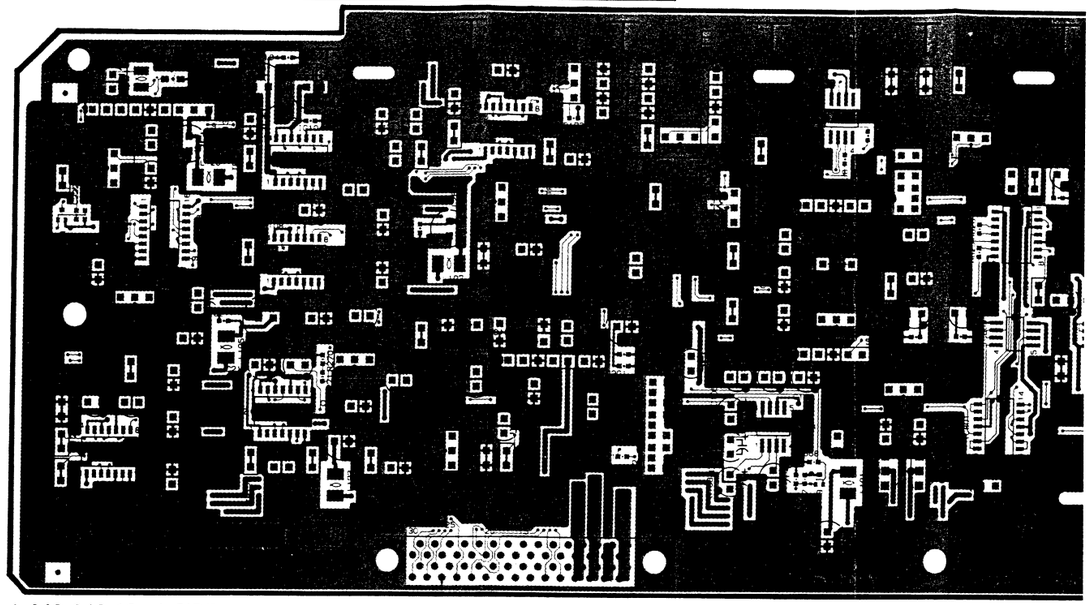

1-642-948-12 A SIDE

A Side is the same as Component Side

VA-111 BOARD
B Side

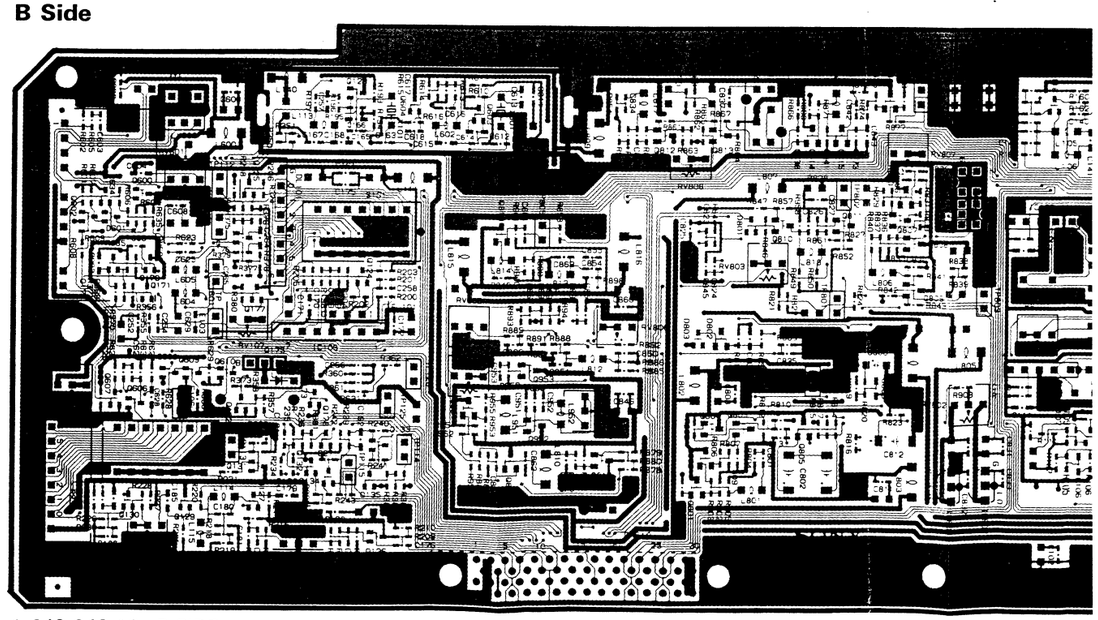

1-642-948-12 B SIDE

B Side is the same as Soldering Side

VA-111 BOARD
A Side

Serial No.: (J) 10031 and higher
Serial No.: (UC) 10251 and higher

TP803 F-3
TP804 G-1
TP805 J-2

X101 K-1

* mark; B SIDE mount.

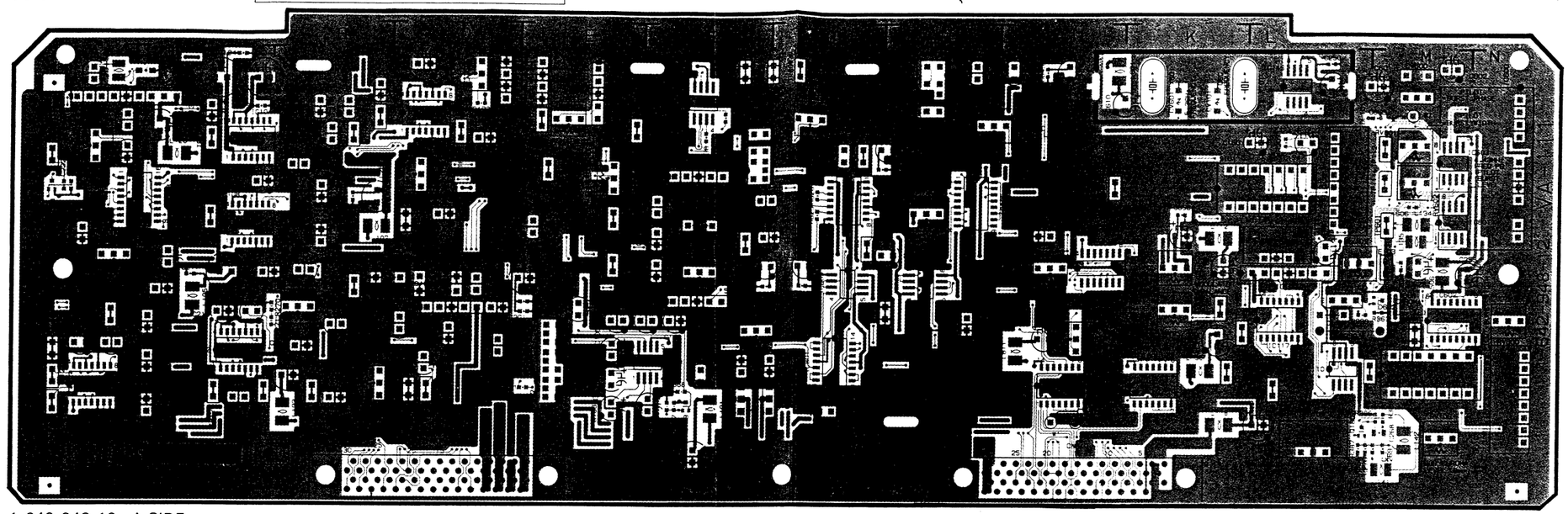

1-642-948-12 A SIDE

A Side is the same as Component Side

VA-111 BOARD
B Side

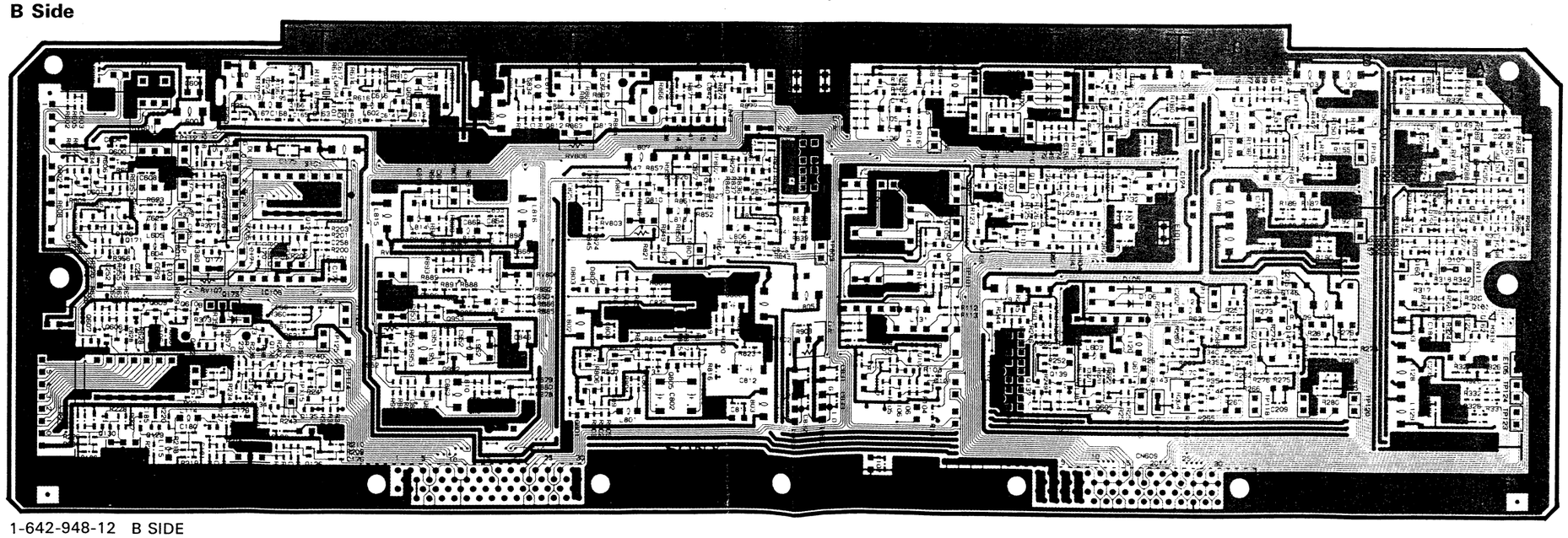

1-642-948-12 B SIDE

B Side is the same as Soldering Side

VA-111 (1-642-948-11)

CN609	D-6	Q105	E-3 *	Q804	H-5 *	TP805	J-2
CN610	J-6	Q106	E-2 *	Q805	H-5 *		
		Q107	D-3 *	Q806	G-2 *	X101	K-1
CV101	K-1	Q108	E-3 *	Q807	G-2 *		
		Q109	E-3 *	Q808	G-2 *	* mark ; B SIDE mount.	
D101	E-1	Q110	E-3 *	Q809	G-3 *		
D102	E-1	Q111	E-2 *	Q810	H-2 *		
D103	E-1	Q112	D-3 *	Q811	G-2 *		
D104	E-1	Q113	D-2 *	Q812	J-1 *		
D105	D-4	Q114	C-1 *	Q813	H-1 *		
D106	D-4	Q115	C-1 *	Q814	H-1 *		
D107	A-3 *	Q116	C-1 *	Q815	G-1 *		
D108	D-3 *	Q117	C-1 *	Q816	G-1 *		
D109	D-3 *	Q118	F-1 *	Q817	J-5 *		
D110	L-4	Q119	E-5	Q818	K-5 *		
D801	H-2 *	Q120	F-1 *	Q819	K-2 *		
D802	H-4 *	Q121	D-2 *				
D803	H-4 *	Q122	D-1 *	RV101	F-4		
		Q123	L-1 *	RV102	E-2		
DL101	L-2	Q124	L-3 *	RV103	D-2		
DL103	N-5	Q125	L-2 *	RV104	E-2		
		Q126	L-6 *	RV105	D-1		
E101	D-3	Q127	L-5 *	RV106	M-6		
E102	F-1	Q129	M-5 *	RV107	L-4		
E103	M-4	Q130	M-5 *	RV108	C-5		
E104	D-5	Q131	L-5 *	RV109	C-4		
E105	A-5	Q132	L-5 *	RV110	A-2		
E106	M-5	Q133	L-5 *	RV111	A-4		
E801	H-4	Q134	L-5 *	RV802	F-5		
E802	G-1	Q135	L-5 *	RV803	H-3		
		Q136	E-4 *	RV805	K-4		
FL101	L-4	Q137	E-5 *	RV806	J-4		
FL102	E-5	Q138	D-5 *	RV807	G-2		
FL103	L-6	Q139	D-5 *	RV808	H-2		
FL104	D-5	Q140	D-5 *				
FL801	F-2	Q141	C-4 *	S101	K-2		
FL802	H-1	Q142	C-5 *	S102	M-5		
		Q143	D-5 *				
IC101	E-5	Q144	C-5 *	TP101	E-4		
IC102	F-4	Q145	C-5 *	TP102	E-3		
IC103	F-2	Q146	C-4 *	TP103	E-2		
IC104	B-2	Q147	C-5 *	TP104	C-2		
IC105	F-2	Q148	C-5 *	TP105	B-2		
IC106	E-1	Q149	A-2 *	TP106	E-2		
IC107	D-2	Q151	A-2	TP107	E-2		
IC108	B-3	Q152	A-3 *	TP108	D-2		
IC109	L-4	Q153	A-2 *	TP109	C-2		
IC110	L-5	Q154	A-2 *	TP110	B-3		
IC111	D-4	Q155	A-2 *	TP111	M-2		
IC112	B-5	Q156	A-3 *	TP112	M-2		
IC113	A-2	Q157	B-3 *	TP113	M-5		
IC114	A-5	Q158	B-2 *	TP114	K-5		
IC115	A-1	Q159	B-3 *	TP115	L-5		
IC116	L-1	Q160	B-4 *	TP116	D-5		
IC117	L-5	Q161	A-4 *	TP117	C-4		
IC801	G-5	Q162	A-4 *	TP118	C-5		
IC802	H-4	Q171	M-3 *	TP119	B-5		
IC803	G-4	Q172	L-5 *	TP120	B-5		
IC804	G-2	Q173	L-5 *	TP121	A-2		
IC805	H-2	Q174	N-3 *	TP122	A-4		
IC806	G-5	Q175	L-4	TP123	A-5		
IC807	F-5	Q176	L-2 *	TP124	A-5		
IC808	J-5	Q177	L-3 *	TP125	K-5		
IC809	J-4	Q178	L-5 *	TP126	K-4		
		Q179	M-3 *	TP601	M-3		
Q101	E-5 *	Q180	L-5	TP801	G-3		
Q102	F-5 *	Q801	H-5 *	TP802	G-2		
Q103	E-5 *	Q802	H-5 *	TP803	F-3		
Q104	E-3 *	Q803	H-5 *	TP804	G-1		

VA-111 BOARD
A Side

Serial No.: (J) 10001—10030
Serial No.: (UC) 10031—10250

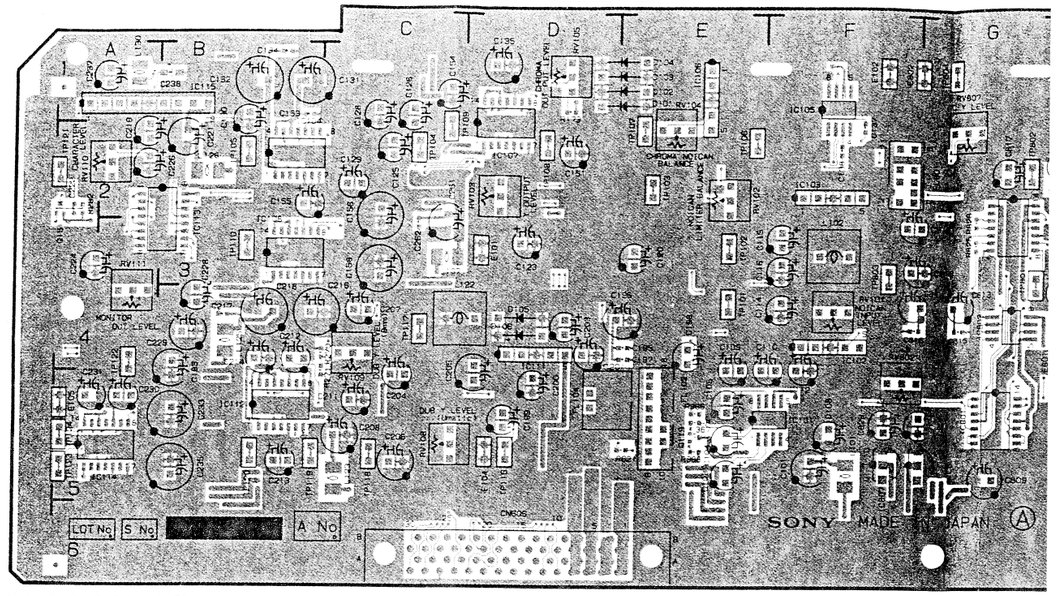

1-642-948-11 A SIDE

A Side is the same as Component Side

VA-111 BOARD
B Side

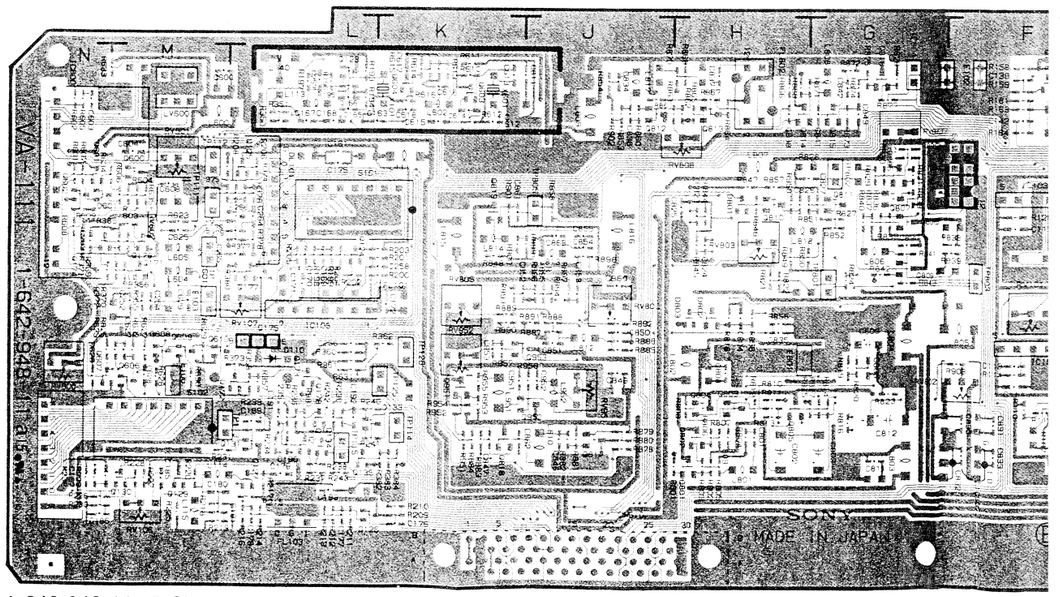

1-642-948-11 B SIDE

B Side is the same as Soldering Side

TP805 J-2

X101 K-1

* mark ; B SIDE mount.

VA-111 BOARD
A Side

Serial No.: (J) 10001—10030
Serial No.: (UC) 10031—10250

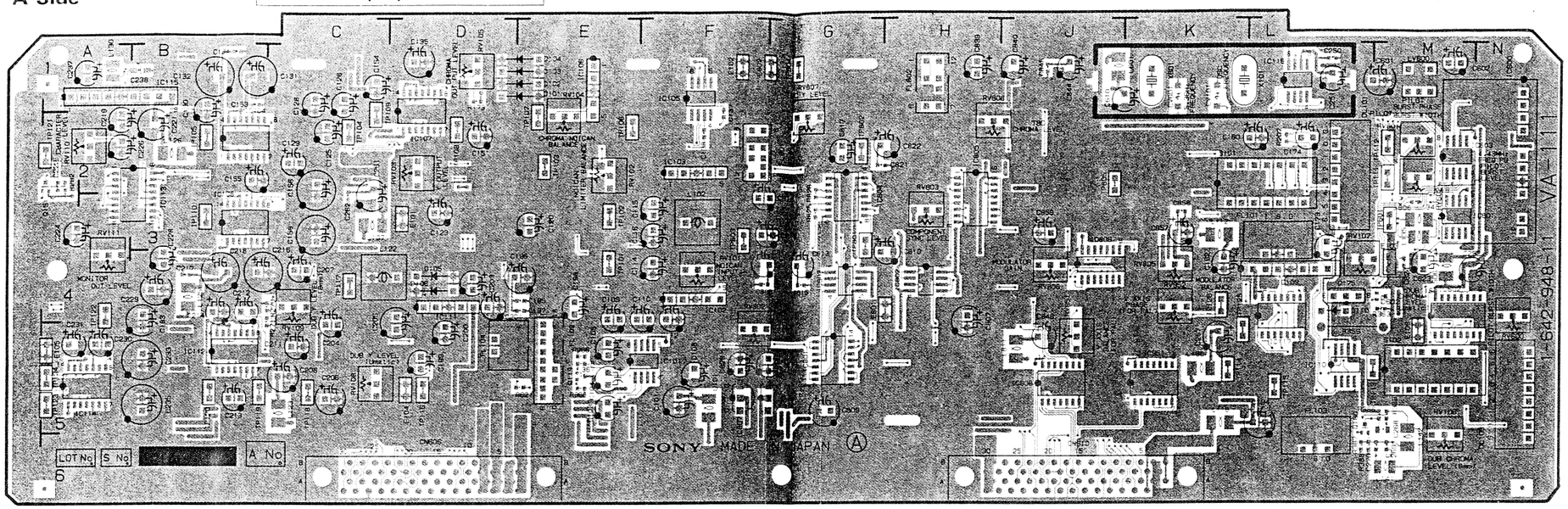

1-642-948-11 A SIDE

A Side is the same as Component Side

VA-111 BOARD
B Side

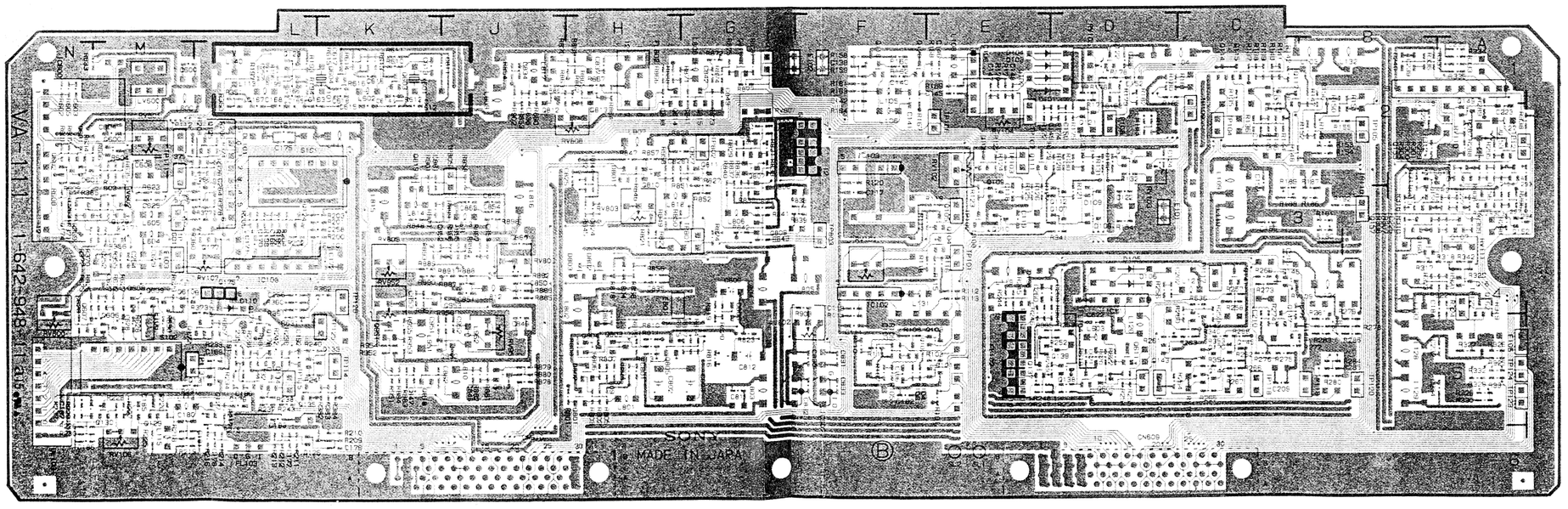

1-642-948-11 B SIDE

B Side is the same as Soldering Side

① CN610-19B PB mode

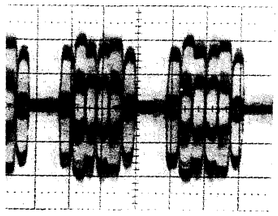

0.2v/div 20μsec/div

② TP801 PB mode

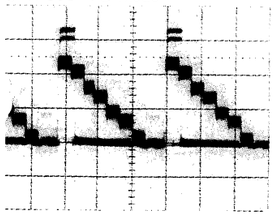

0.2v/div 20μsec/div

③ TP805 EE mode

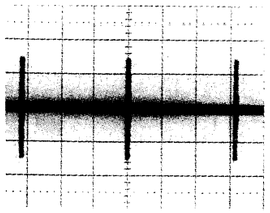

1v/div 20μsec/div

④ TP802 PB mode

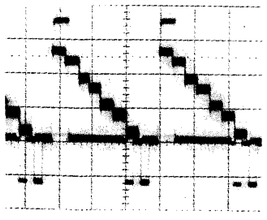

2v/div 20μsec/div

⑤ TP805 PB mode

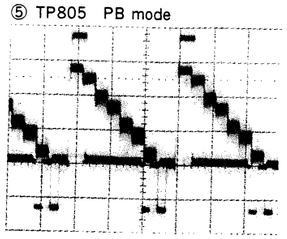

0.2v/div 20μsec/div

⑥ TP804 PB mode

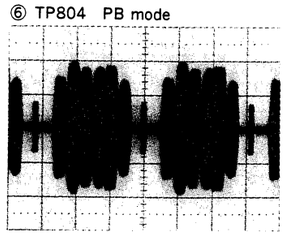

0.2v/div 20μsec/div

Measurement Condition
VIDEO IN: 75% color bars
PB mode: (WR5-8NSE: color bars)
EE mode

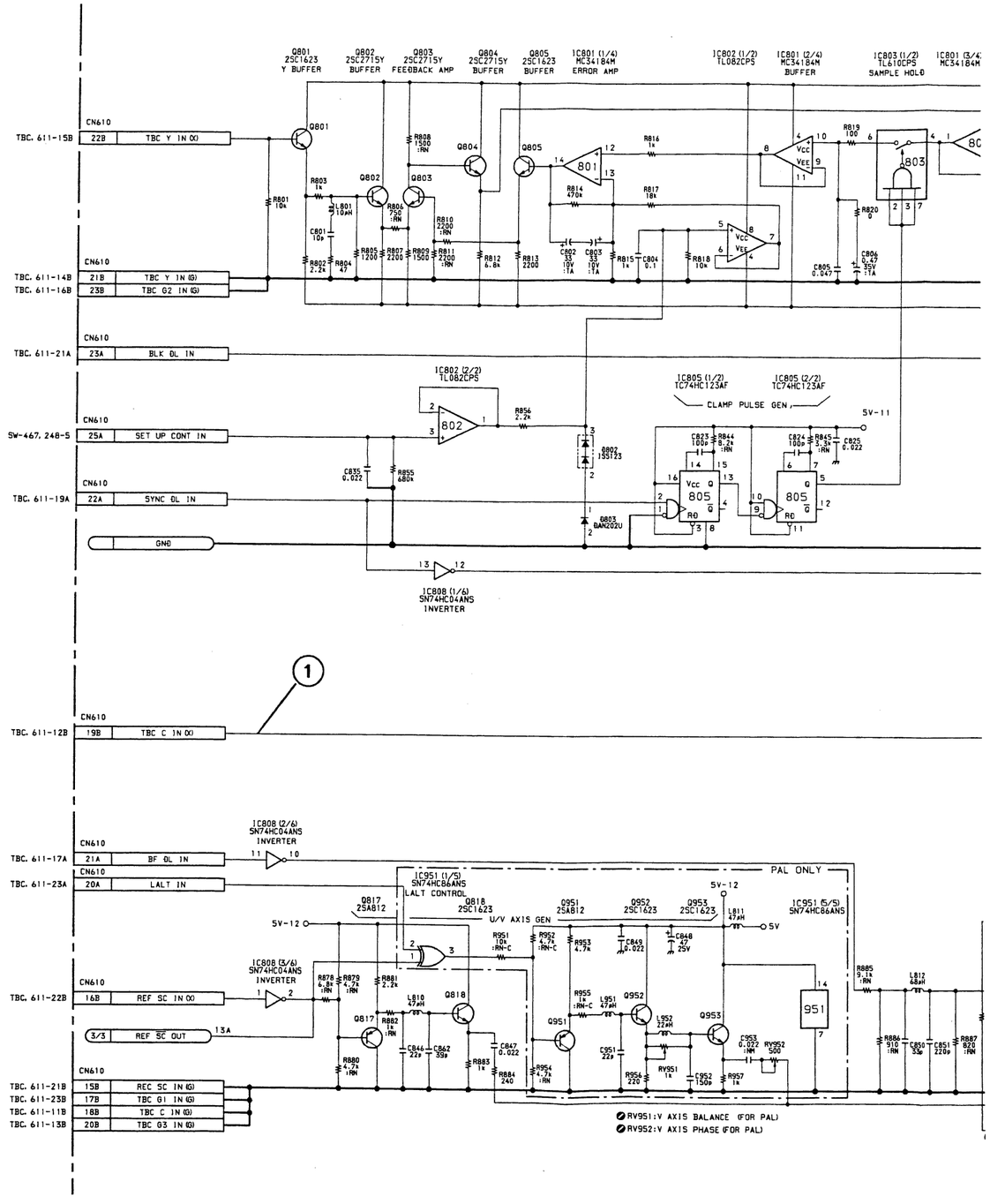

A B C D E F G H

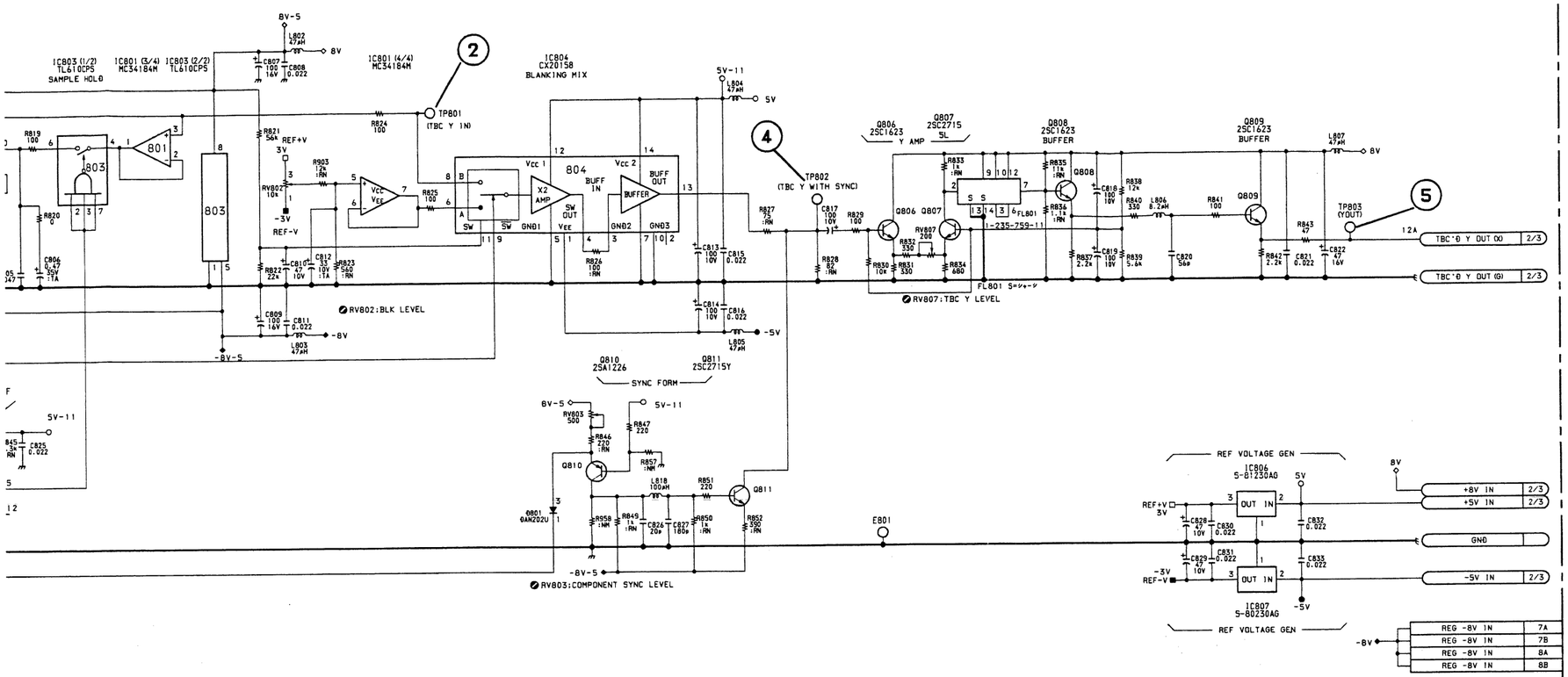

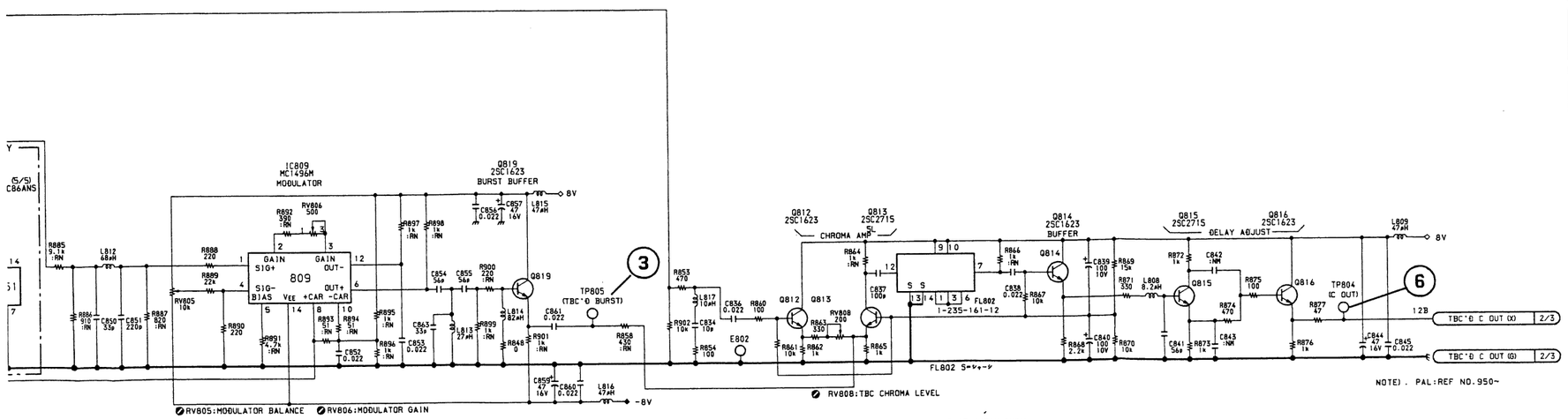

(FL801, 802 NO 13, 14PIN=GND)

TBC' D Y/C Process

VA-111 BOARD (1/3)

BOARD NO. 1-642-948-11
EVO-9850 (J) : # 10001—
EVO-9850 (UC) : # 10031—

VA-111 (1/3)

① CN610-19B PB mode

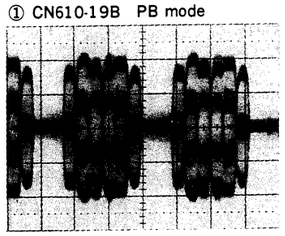

0.2v/div 20μsec/div

② TP801 PB mode

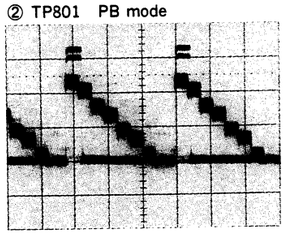

0.2v/div 20μsec/div

③ TP805 EE mode

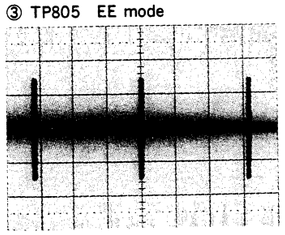

0.1v/div 20μsec/div

④ TP802 PB mode

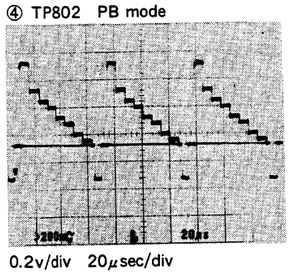

0.2v/div 20μsec/div

⑤ TP803 PB mode

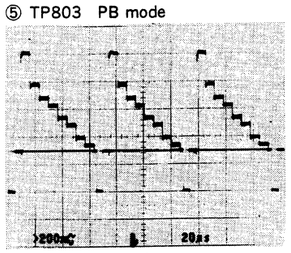

0.2v/div 20μsec/div

⑥ TP804 PB mode

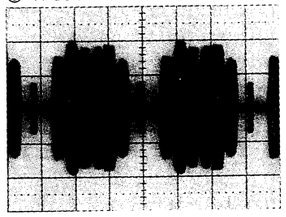

0.2v/div 20μsec/div

Measurement Condition
VIDEO IN: 75% color bars
PB mode: (WR5-8NSE: color bars)
EE mode

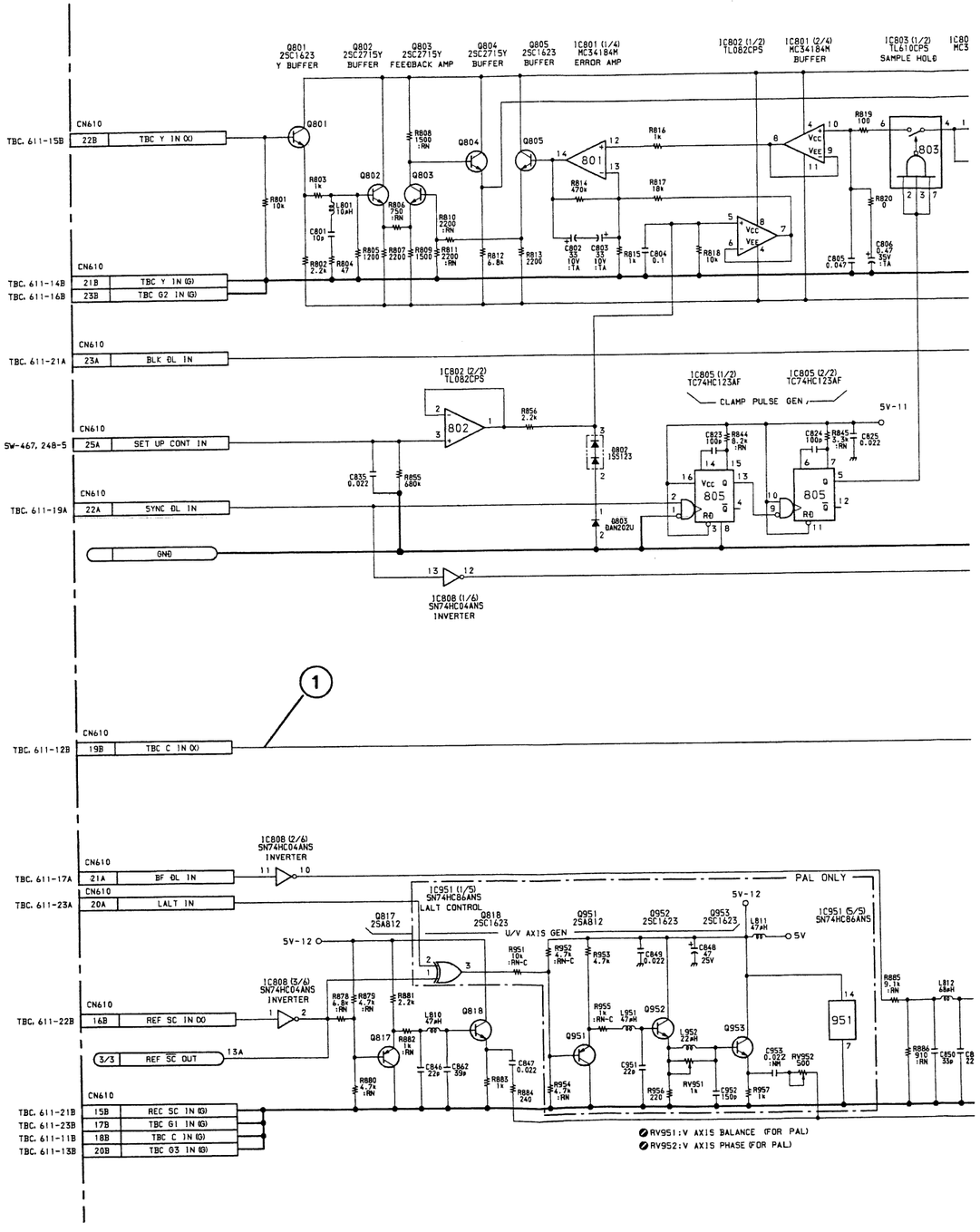

13-23

A | B | C | D | E | F | G | H

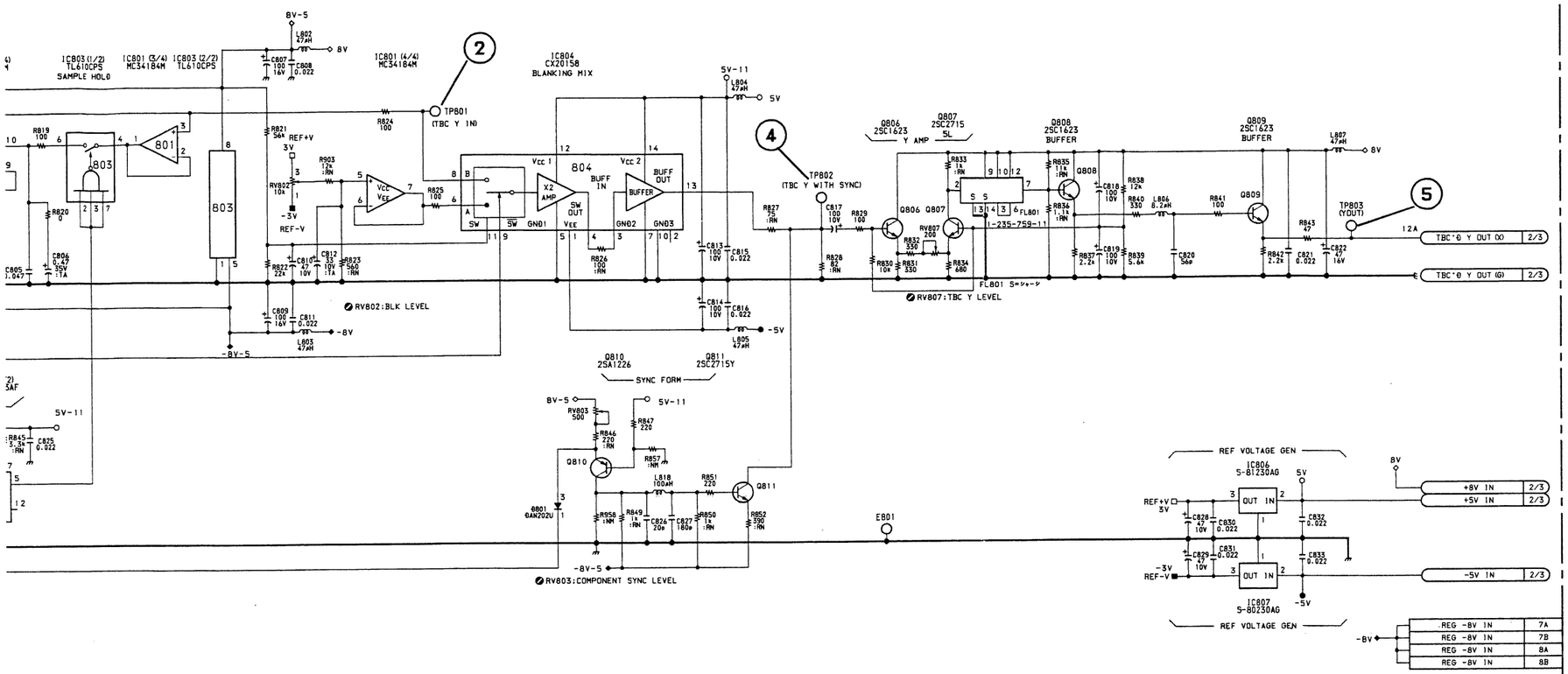

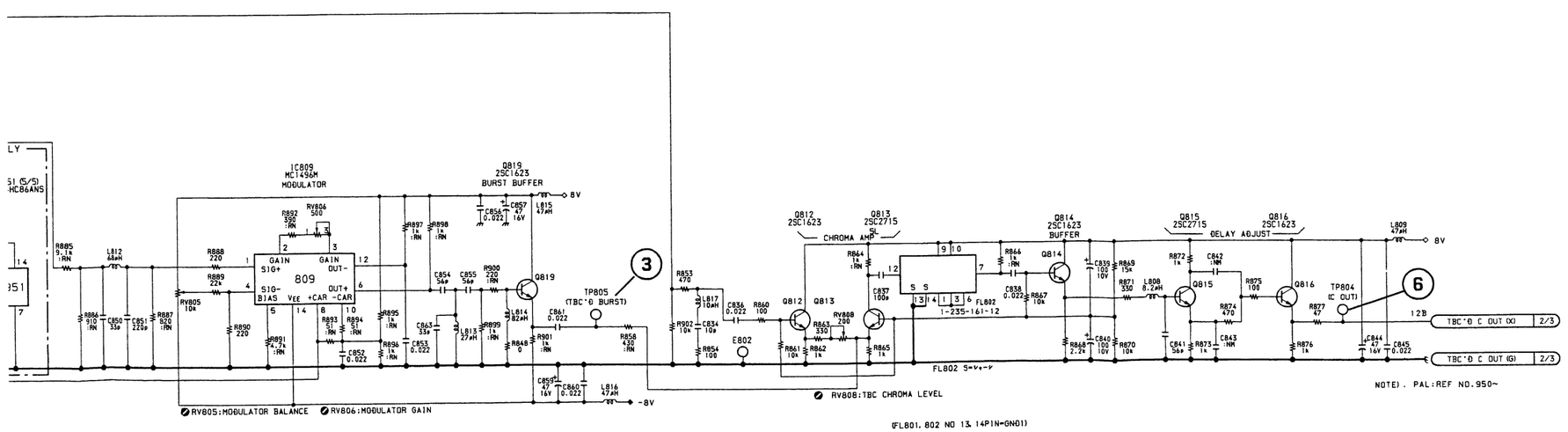

TBC' D Y/C Process

VA-111 BOARD (1/3)

BOARD NO. 1-642-948-11, 12
EVO-9850 (J) : # 10001—
EVO-9850 (UC) : # 10031—

① TP106 PB mode

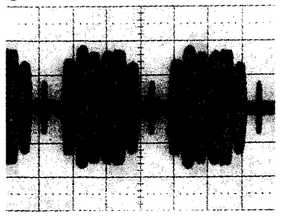

0.2v/div 20μsec/div

② TP121 EE mode

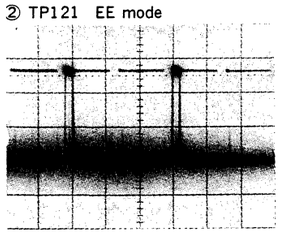

2v/div 20μsec/div

③ TP103 PB mode

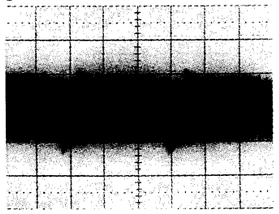

).05v/div 20μsec/div

④ TP108 PB mode

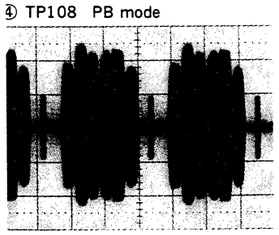

).2v/div 20μsec/div

⑤ TP104 PB mode

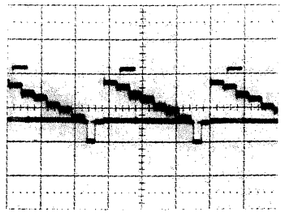

0.5v/div 20μsec/div

⑥ TP109 PB mode

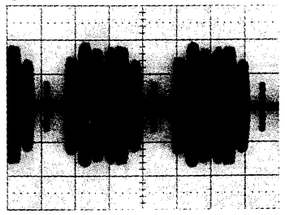

0.5v/div 20μsec/div

⑦ TP122 PB mode

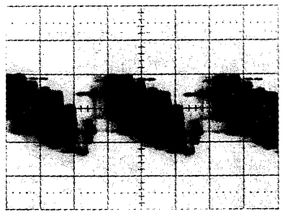

0.5v/div 20μsec/div

⑧ TP105 PB mode

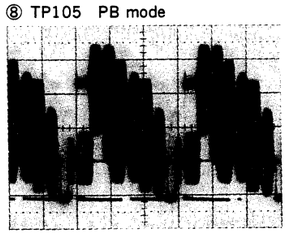

0.5v/div 20μsec/div

⑨ TP110 PB mode

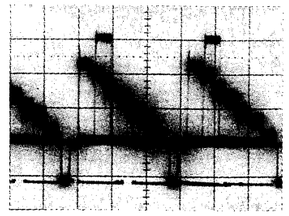

0.5v/div 20μsec/div

⑩ TP123 PB mode

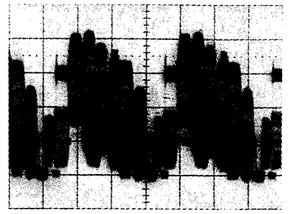

0.2v/div 20μsec/div

⑪ TP124 PB mode

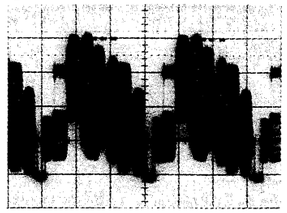

0.5v/div 20μsec/div

Measurement Condition

VIDEO IN: 75% color bars

PB mode: (WR5-8NSE: color bars)

EE mode

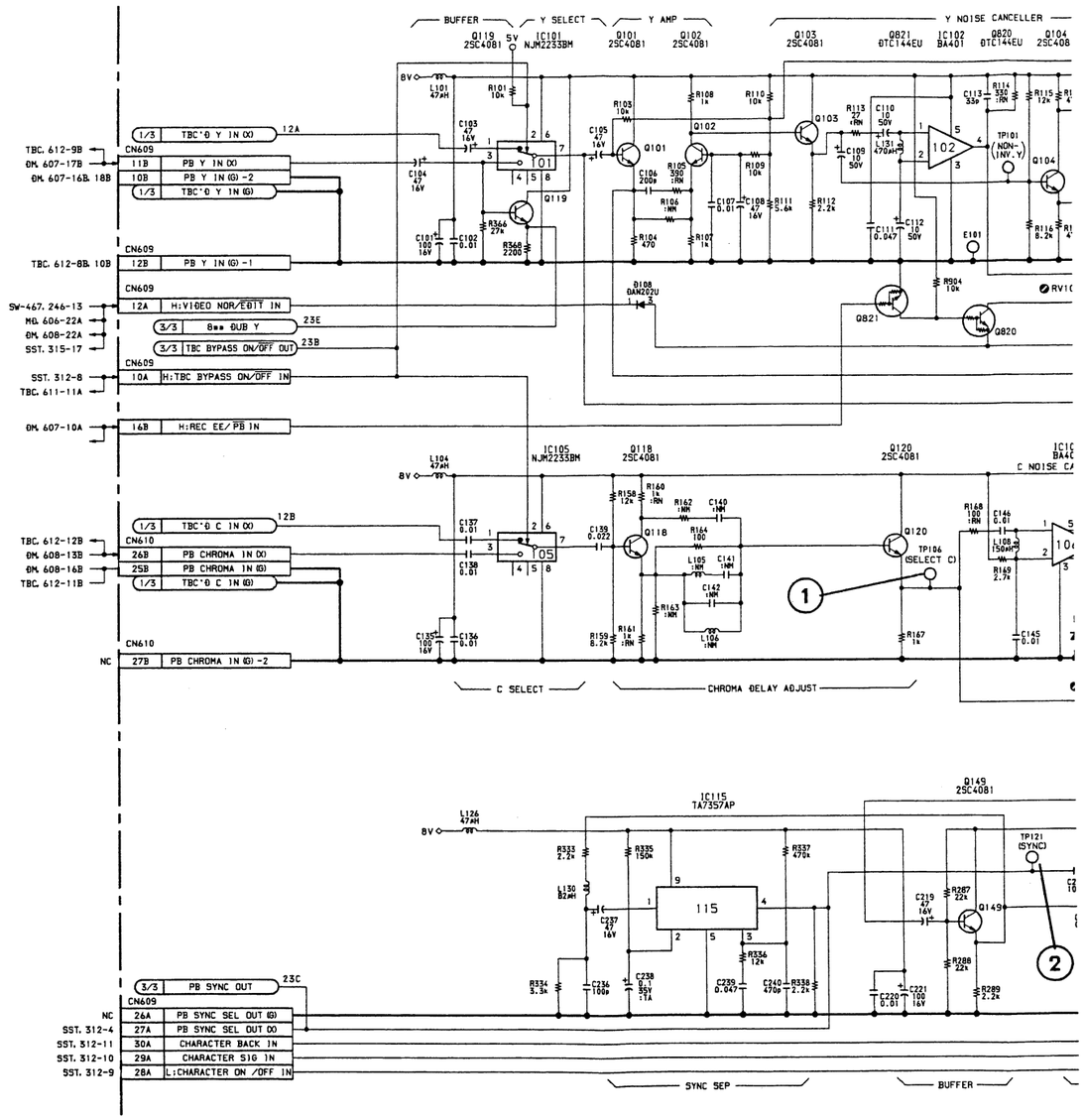

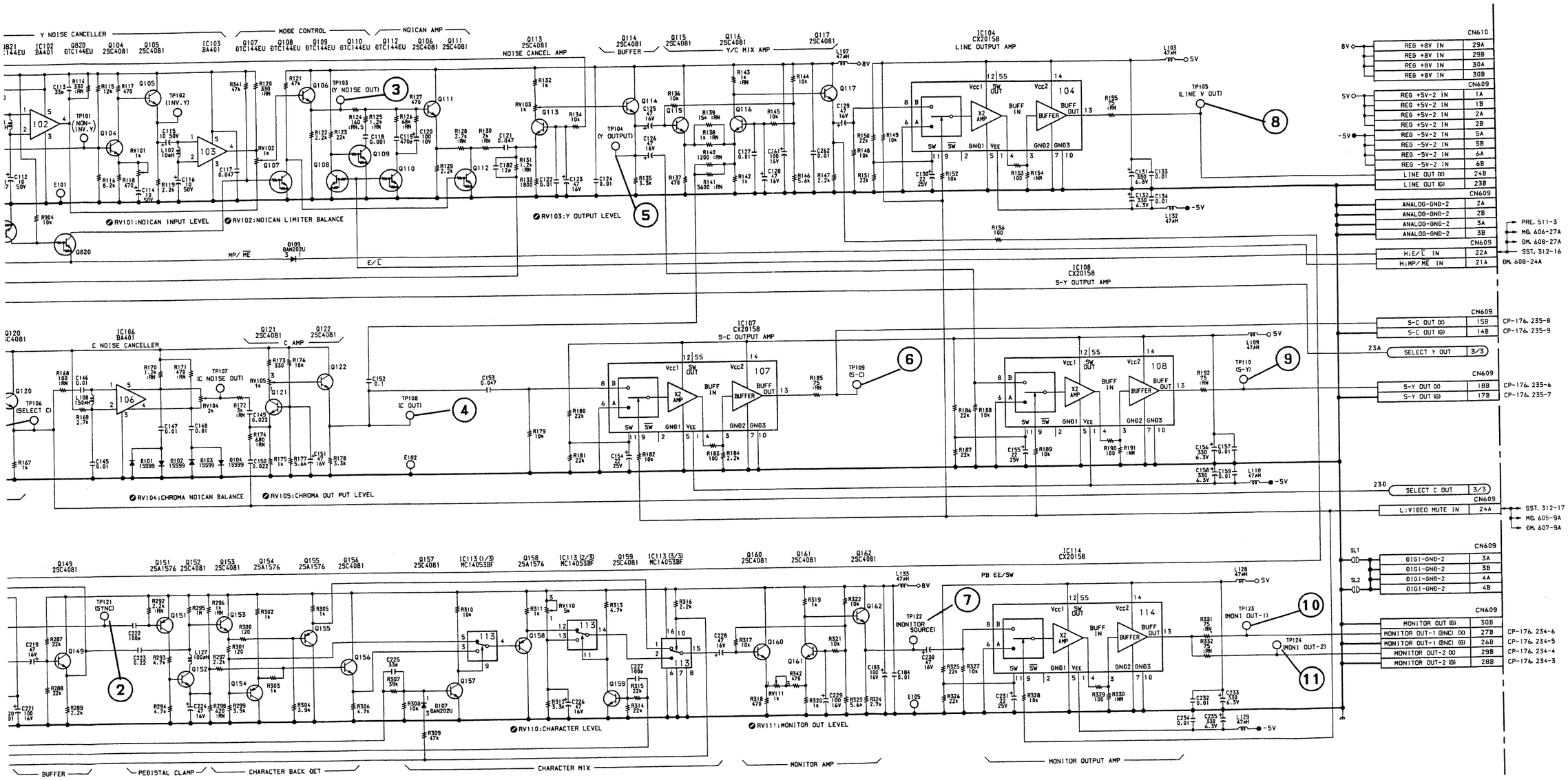

Video Output

VA-111 BOARD (2/3)

BOARD NO. 1-642-948-11
EVO-9850 (J) : # 10001 —
EVO-9850 (UC) : # 10031 —

① TP106 PB mode

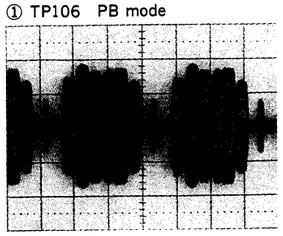

0.2v/div 20μsec/div

② TP121 EE mode

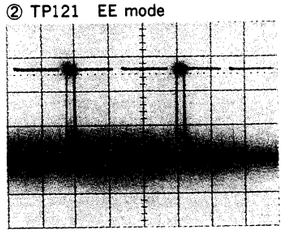

2v/div 20μsec/div

③ TP103 PB mode

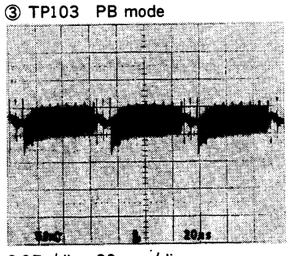

0.05v/div 20μsec/div

④ TP108 PB mode

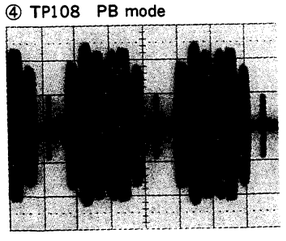

0.2v/div 20μsec/div

⑤ TP104 PB mode

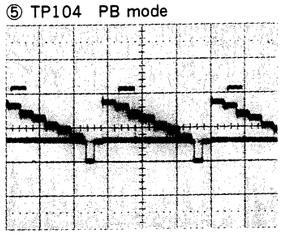

0.5v/div 20μsec/div

⑥ TP109 PB mode

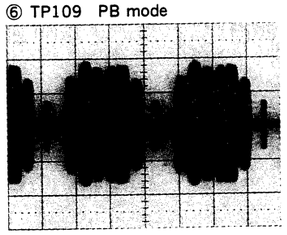

0.5v/div 20μsec/div

⑦ TP122 PB mode

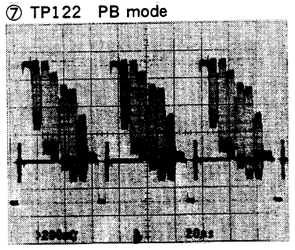

0.2v/div 20μsec/div

⑧ TP105 PB mode

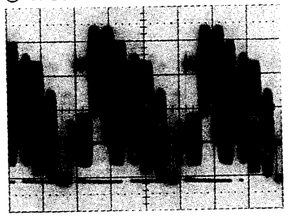

0.5v/div 20μsec/div

⑨ TP110 PB mode

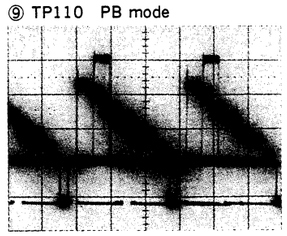

0.5v/div 20μsec/div

⑩ TP123 PB mode

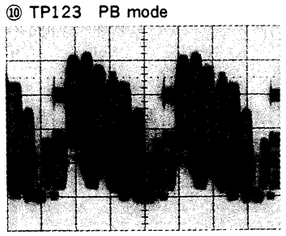

0.2v/div 20μsec/div

⑪ TP124 PB mode

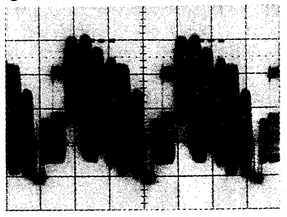

0.5v/div 20μsec/div

Measurement Condition

VIDEO IN: 75% color bars
PB mode: (WR5-8NSE: color bars)
EE mode

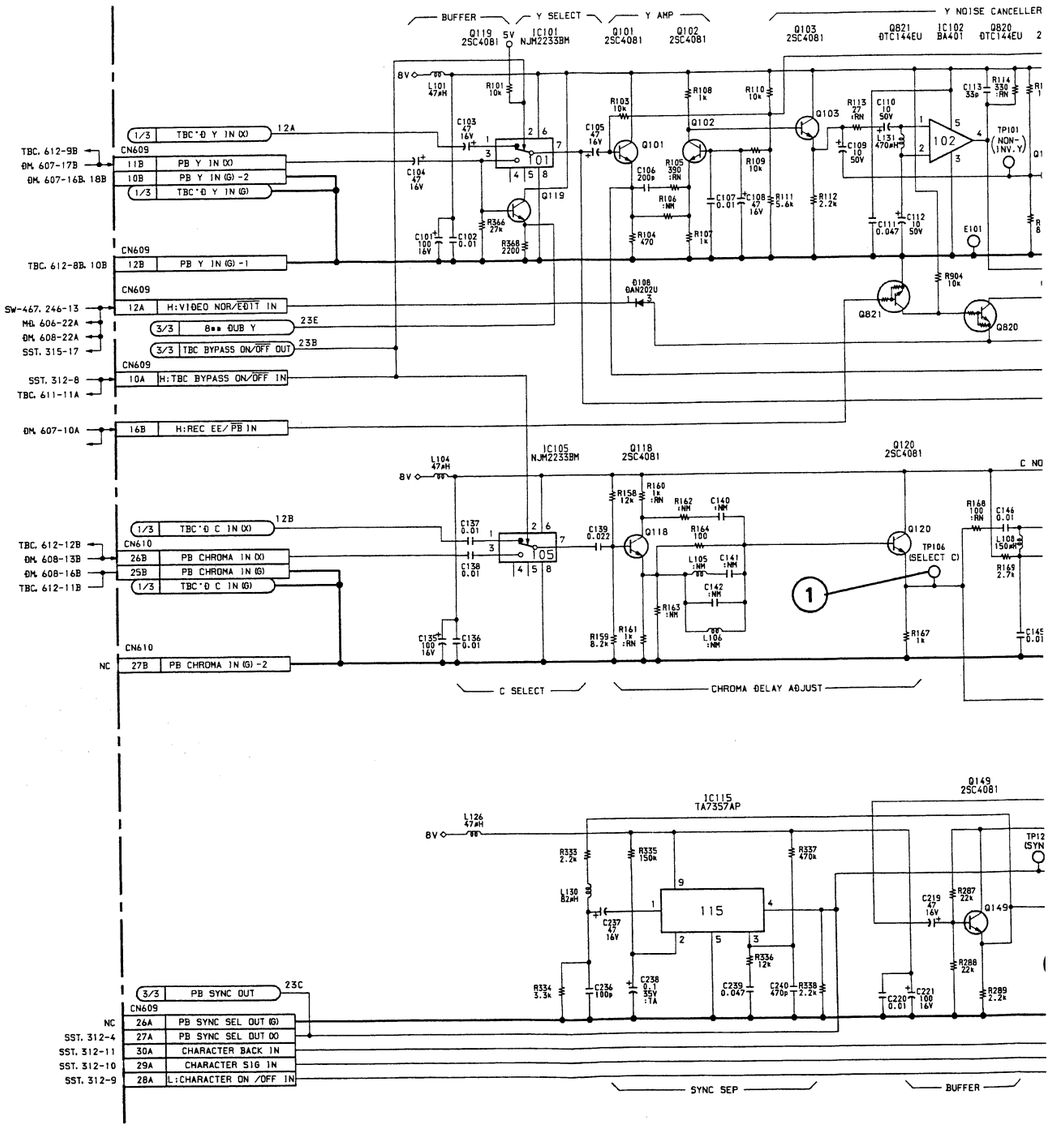

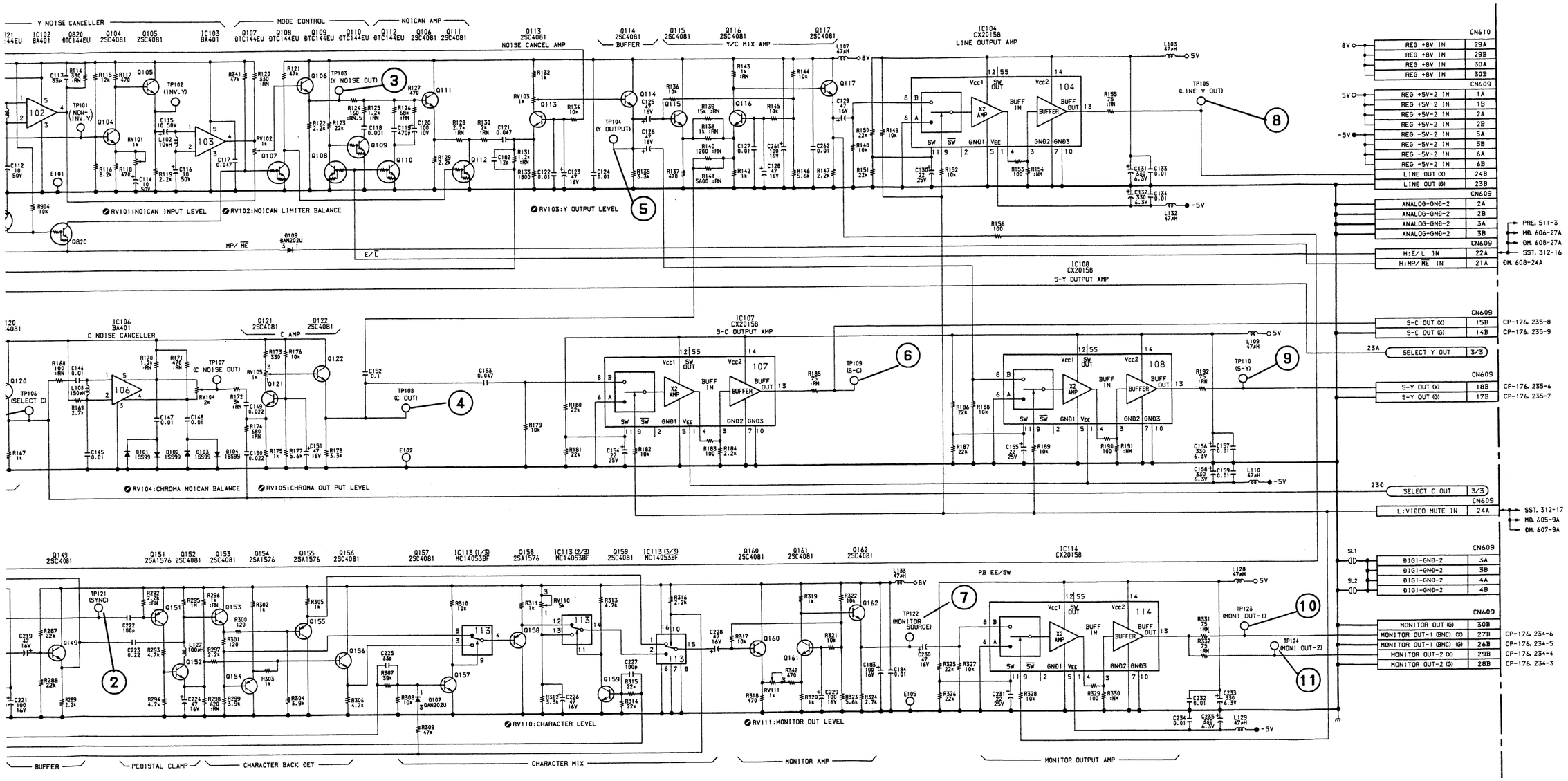

Video Output

VA-111 BOARD (2/3)

BOARD NO. 1-642-948-11, 12
EVO-9850 (J) : # 10001—
EVO-9850 (UC) : # 10031—

VA-111 (3/3)

① TP116 PB mode

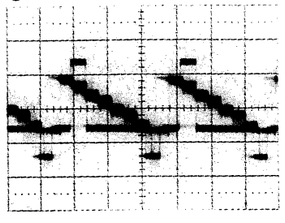

0.2v/div 20μsec/div

② TP111 PB mode

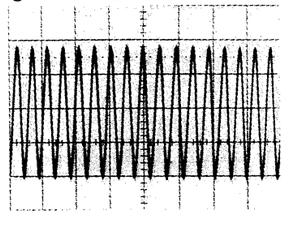

0.2v/div 0.5μsec/div

③ TP112 PB mode

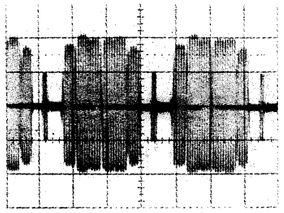

0.2v/div 20μsec/div

④ TP117 PB mode

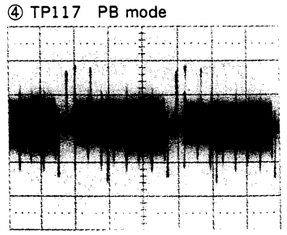

0.1v/div 20μsec/div

⑤ TP118 PB mode

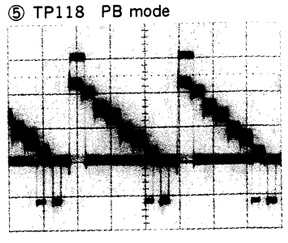

0.2v/div 20μsec/div

⑥ TP119 PB mode

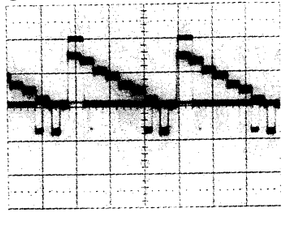

0.2v/div 20μsec/div

⑦ TP113 PB mode

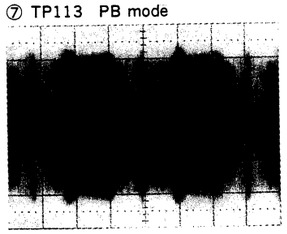

0.1v/div 20μsec/div

⑧ TP120 PB mode

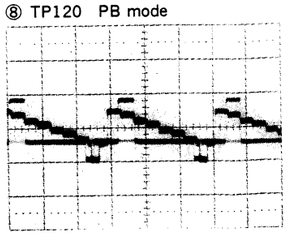

0.5v/div 20μsec/div

⑨ TP125 EE mode

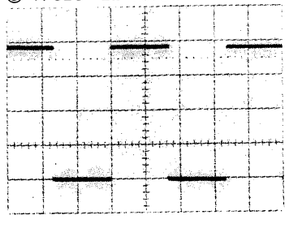

2v/div 10msec/div

⑩ TP115 PB mode

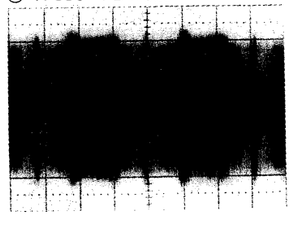

0.1v/div 20μsec/div

Measurement Condition

VIDEO IN: 75% color bars

PB mode: (WR5-8NSE: color bars)

EE mode

13-26

13-26

13-26

VA-111 (3/3)

① TP116 PB mode

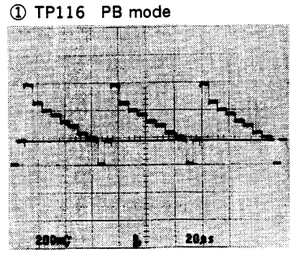

0.2v/div 20μsec/div

② TP111 PB mode

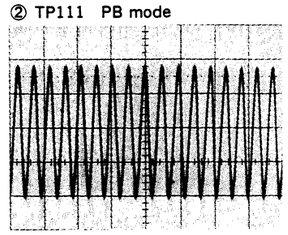

0.2v/div 0.5μsec/div

③ TP112 PB mode

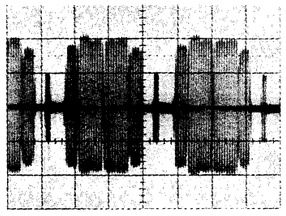

0.2v/div 20μsec/div

④ TP117 PB mode

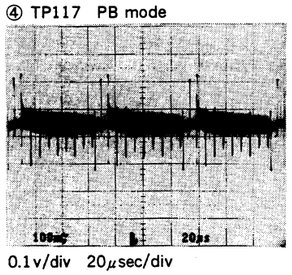

0.1v/div 20μsec/div

⑤ TP118 PB mode

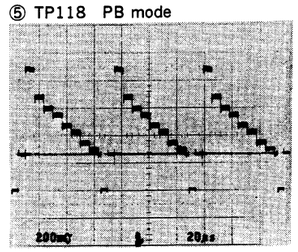

0.2v/div 20μsec/div

⑥ TP119 PB mode

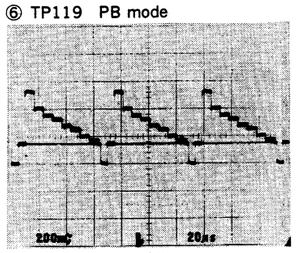

0.2v/div 20μsec/div

⑦ TP113 PB mode

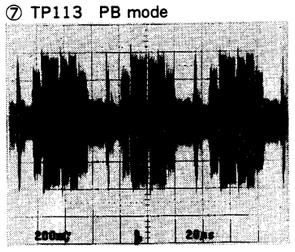

0.2v/div 20μsec/div

⑧ TP120 PB mode

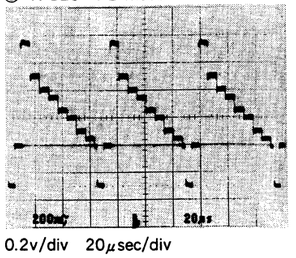

0.2v/div 20μsec/div

⑨ TP125 EE mode

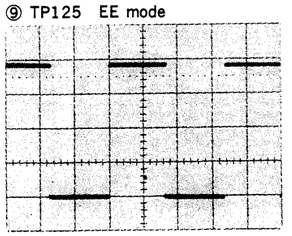

2v/div 10msec/div

⑩ TP115 PB mode

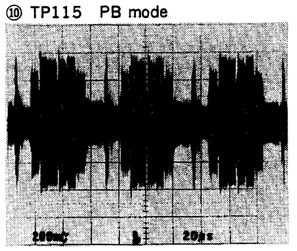

0.2v/div 20μsec/div

Measurement Condition

VIDEO IN: 75% color bars

PB mode: (WR5-8NSE: color bars)

EE mode

13-26

13-27 13-27

A B C D E F G H

VA-111 (3/3)

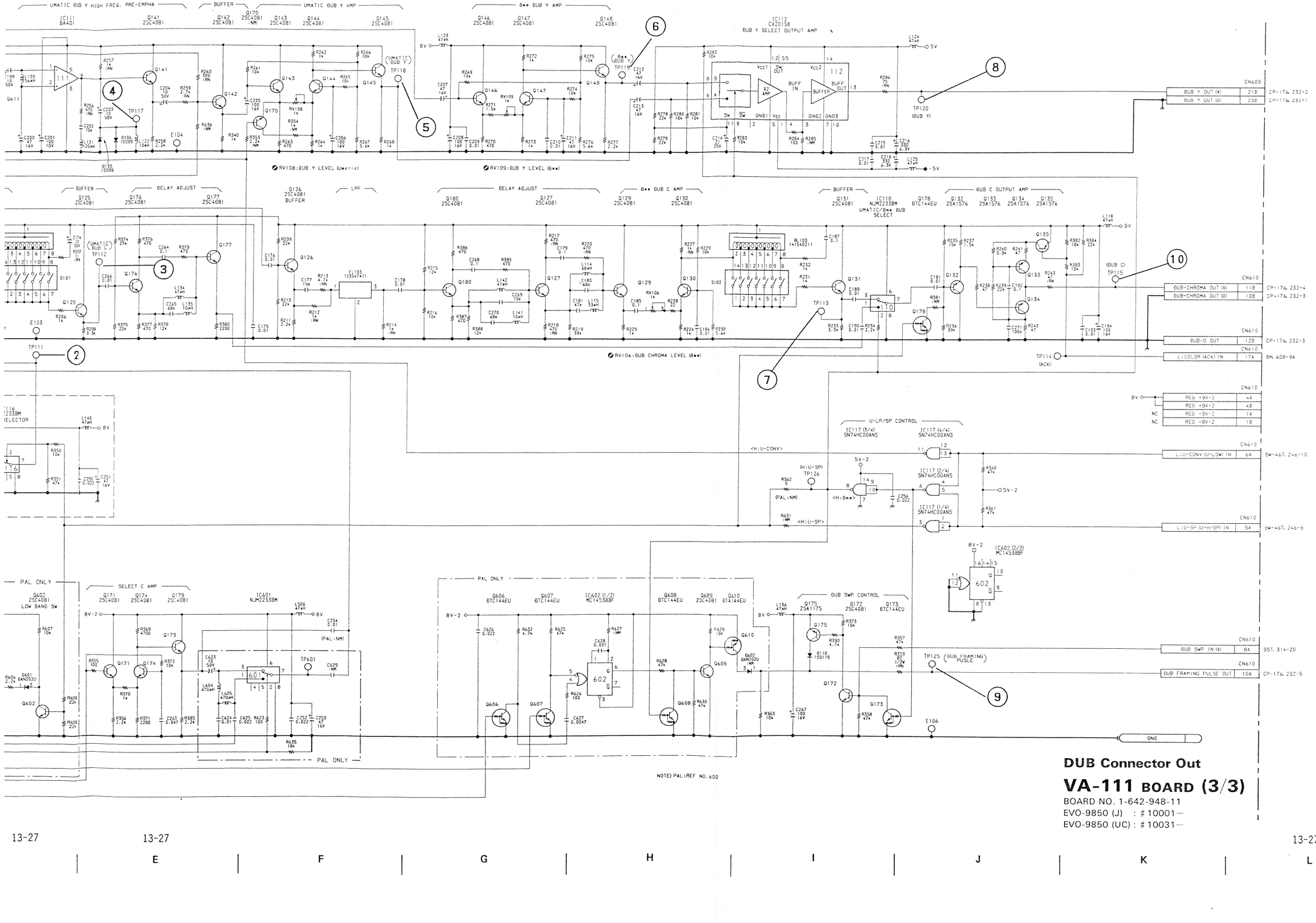

NOTE) PAL:REF NO. 600

DUB Connector Out

VA-111 BOARD (3/3)

BOARD NO. 1-642-948-11
EVO-9850 (J) : # 10001—
EVO-9850 (UC) : # 10031—

VA-111 (3/3) VA-111 (3/3)

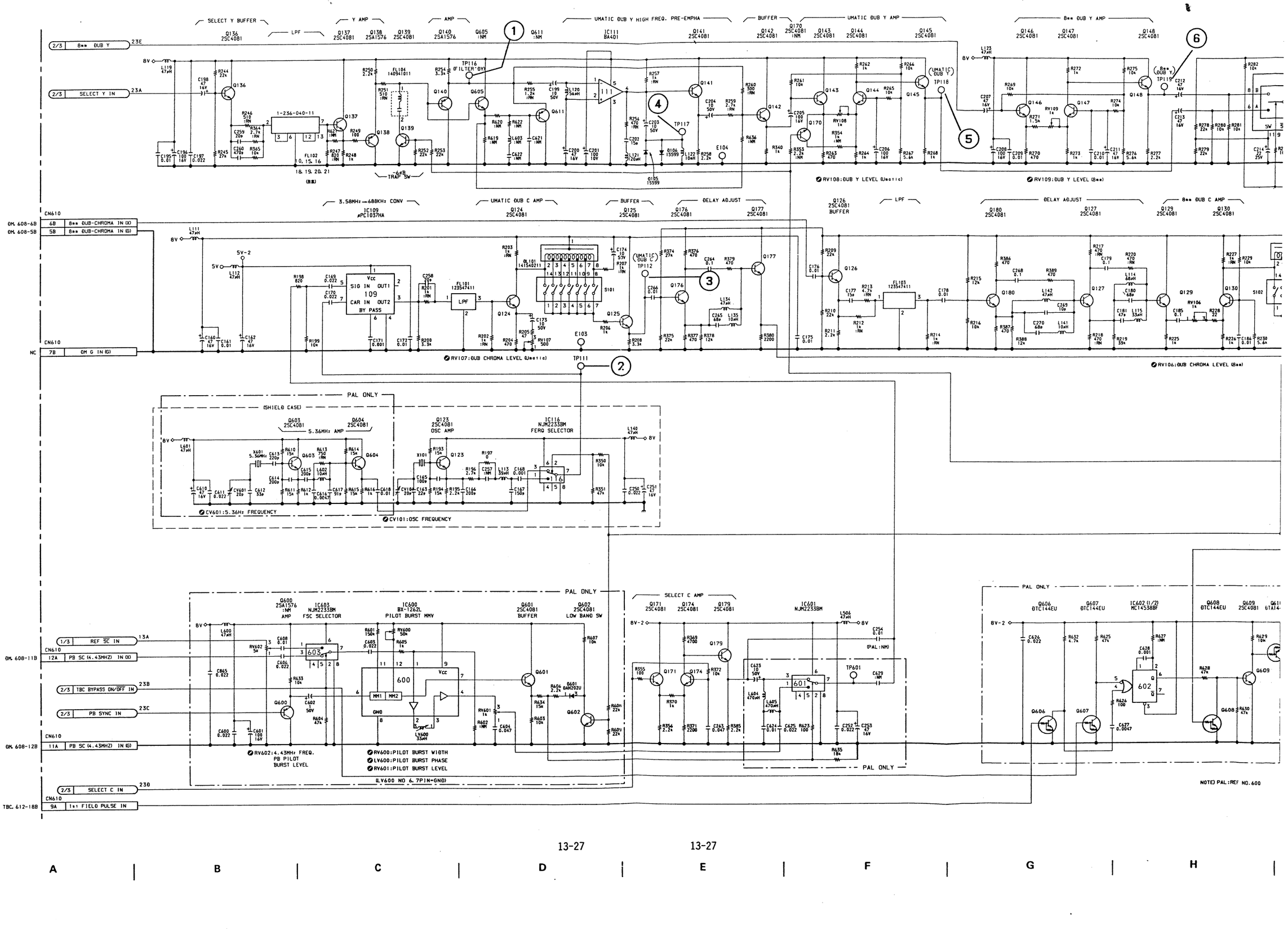

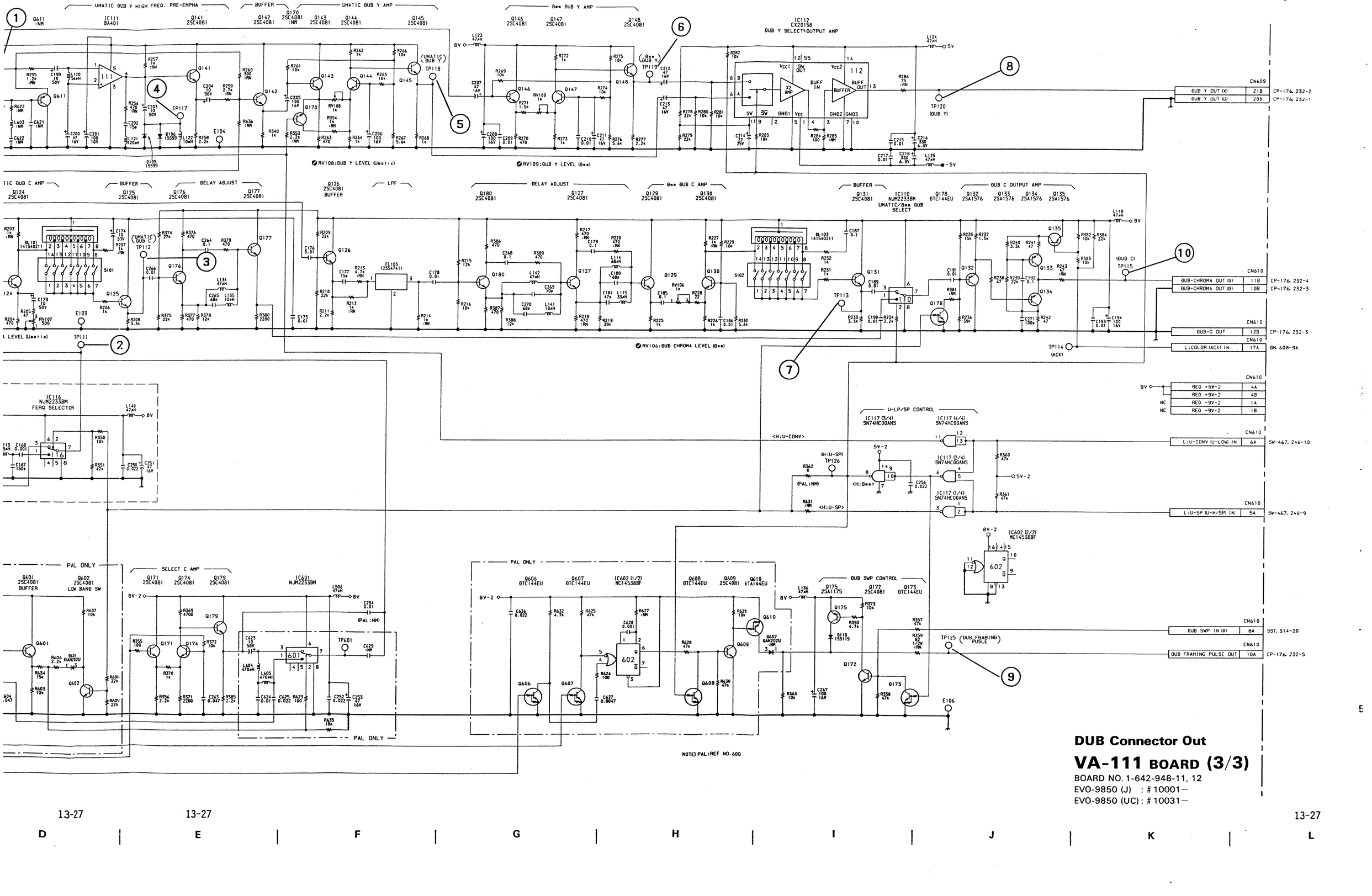

DUB Connector Out

VA-111 BOARD (3/3)

BOARD NO. 1-642-948-11, 12
EVO-9850 (J) : # 10001—
EVO-9850 (UC) : # 10031—

CP-176 BOARD
A Side

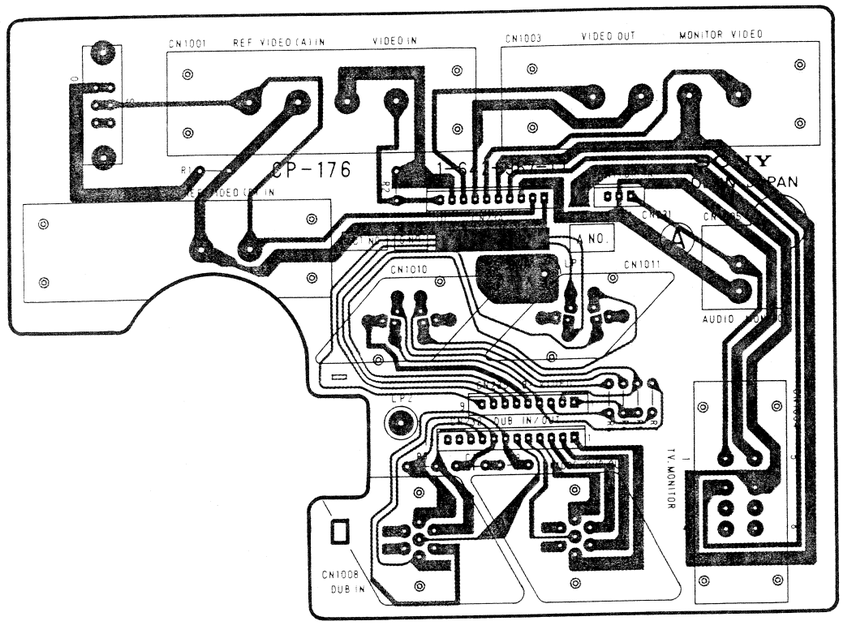

1-642-967-11 A SIDE

A Side is the same as Component Side

CP-176 BOARD
B Side

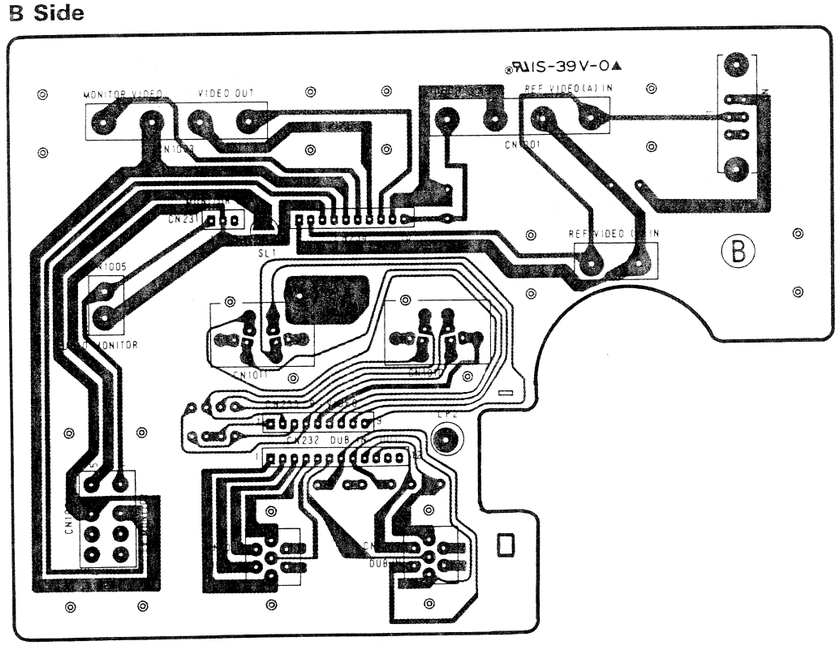

1-642-967-11 B SIDE

B Side is the same as Soldering Side

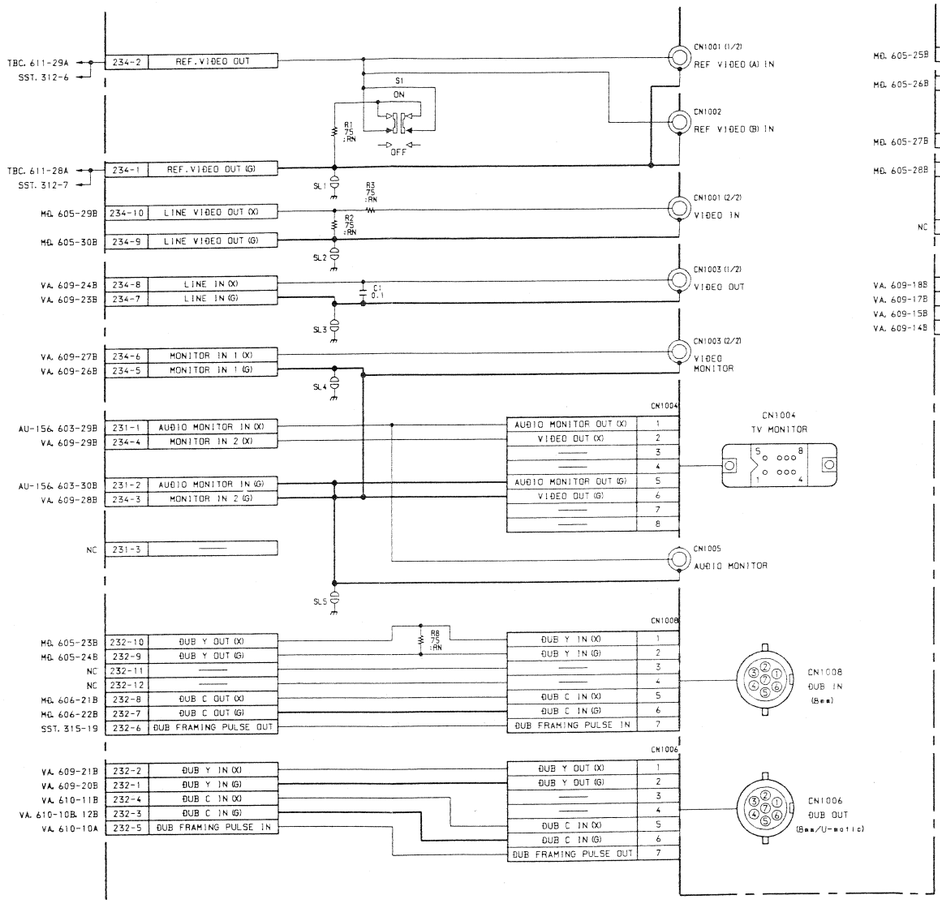

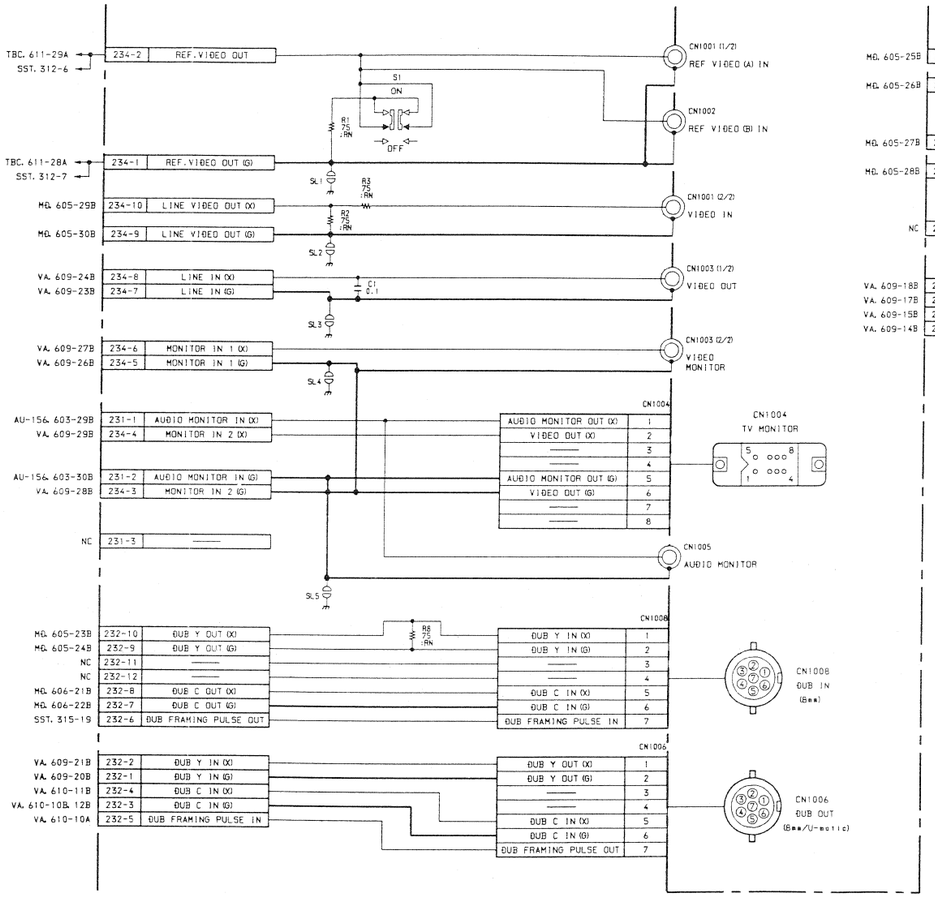

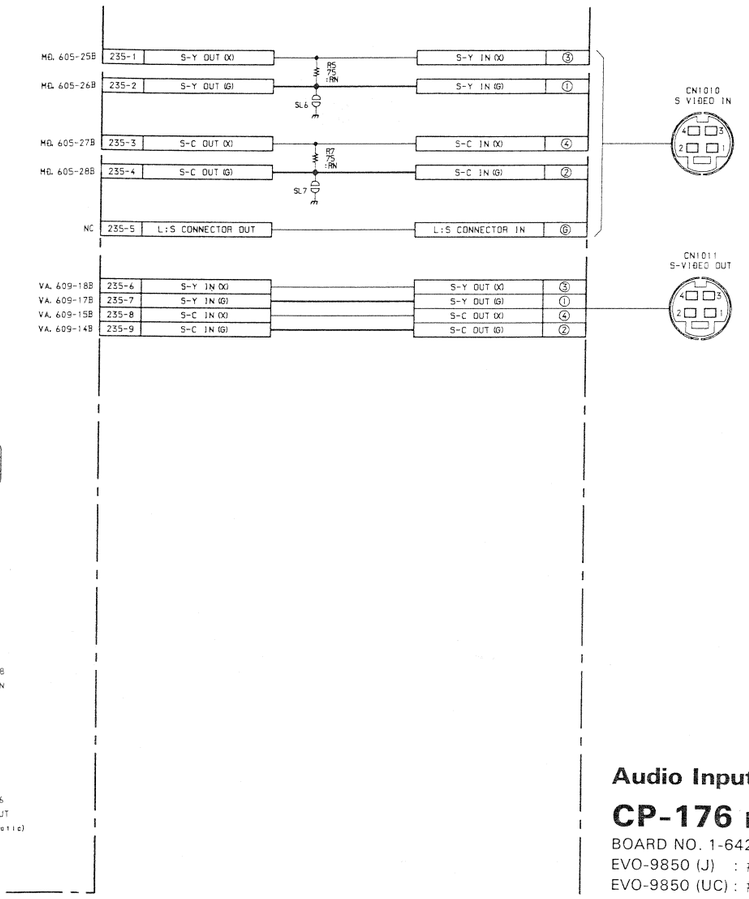

Audio Input/Output

CP-176 BOARD

BOARD NO. 1-642-967-11
EVO-9850 (J) : # 10001—
EVO-9850 (UC) : # 10031—

AU-156 (1-642-943-12)

CN221	C-1	IC705	G-4	RV351	D-1
CN222	B-1	IC751	E-3	RV501	G-3
CN603	D-4	IC801	B-3	RV502	G-3
CN604	J-4	IC851	A-3	RV503	H-1
		IC1001	J-2	RV601	F-3
D1	M-2 *	IC1002	J-2	RV602	F-3
D2	M-2 *			RV603	J-1
D50	D-3 *	Q1	L-2 *	RV701	F-1
D51	D-3 *	Q2	M-2 *	RV702	G-1
D52	D-3 *	Q3	M-2 *	RV750	E-3
D53	C-2 *	Q50	D-3 *	RV751	E-3
D54	C-1 *	Q51	D-3 *	RV801	B-2
D55	C-2 *	Q54	C-2 *	RV851	A-2
D101	L-2 *	Q101	L-2 *	RV1001	J-1
D102	L-2 *	Q102	L-2 *		
D150	D-3 *	Q103	L-2 *	S1	E-1
D151	C-3 *	Q150	C-3 *		
D153	C-3 *	Q151	C-3 *	TP1	L-2
D201	K-2 *	Q154	C-1 *	TP2	L-2
D202	K-2 *	Q155	D-2 *	TP50	D-2
D301	K-2 *	Q201	K-2 *	TP101	L-3
D302	K-2 *	Q202	K-2 *	TP102	L-2
D750	E-3 *	Q203	K-2 *	TP150	C-2
D751	E-3 *	Q250	D-3 *	TP201	K-3
D801	B-2 *	Q251	D-3 *	TP202	K-2
D802	B-2 *	Q255	D-2 *	TP250	D-2
D901	A-2	Q256	C-2 *	TP301	J-3
D902	B-2	Q257	C-2 *	TP302	J-2
D903	B-3 *	Q301	J-3 *	TP350	C-2
		Q302	K-2 *	TP501	H-3
E1	M-2	Q303	K-2 *	TP502	H-3
E2	D-2	Q350	C-3 *	TP503	G-3
E101	L-2	Q351	C-3 *	TP504	H-2
E102	D-1	Q602	F-3 *	TP505	H-3
E501	F-4	Q701	J-1 *	TP506	H-2
E502	J-3	Q702	J-1 *	TP507	H-2
E602	F-1	Q703	H-1 *	TP508	H-2
E701	H-1	Q704	H-1 *	TP509	H-3
E702	G-3	Q705	J-3 *	TP510	G-2
E750	E-1	Q706	H-3 *	TP601	F-2
E800	A-1	Q707	H-3 *	TP602	G-3
E801	B-3	Q708	G-3 *	TP603	F-3
		Q709	E-3 *	TP604	F-2
FL701	G-3	Q710	E-1 *	TP605	G-2
FL702	F-3	Q750	E-3 *	TP606	G-2
		Q751	E-3 *	TP607	F-2
IC1	L-3	Q752	E-2 *	TP608	F-1
IC2	M-2	Q753	E-2 *	TP609	F-3
IC50	D-3	Q754	E-2 *	TP610	E-2
IC51	D-2	Q755	E-2 *	TP701	H-1
IC52	C-1	Q756	E-2 *	TP702	F-1
IC53	C-1	Q801	B-2 *	TP703	H-1
IC101	L-3	Q802	B-3 *	TP704	F-1
IC102	L-2	Q851	B-3 *	TP705	G-2
IC150	C-3	Q852	B-3 *	TP706	G-2
IC151	D-1	Q860	J-3 *	TP750	E-3
IC201	K-3	Q901	B-2 *		
IC202	K-2	Q902	B-3 *	X501	G-4
IC250	D-2	Q1001	J-2 *		
IC251	C-2	Q1002	J-2 *	* mark ; B SIDE mount.	
IC301	K-3	Q1003	J-1 *		
IC302	J-2				
IC401	A-3	RV1	M-1		
IC501	H-2	RV51	D-1		
IC601	F-2	RV101	L-1		
IC701	G-1	RV151	C-1		
IC702	G-4	RV201	K-1		
IC703	E-1	RV251	D-1		
IC704	E-1	RV301	J-1		

Serial No.: (J) 10031 and higher
Serial No.: (UC) 10071 and higher

AU-156 BOARD
A Side

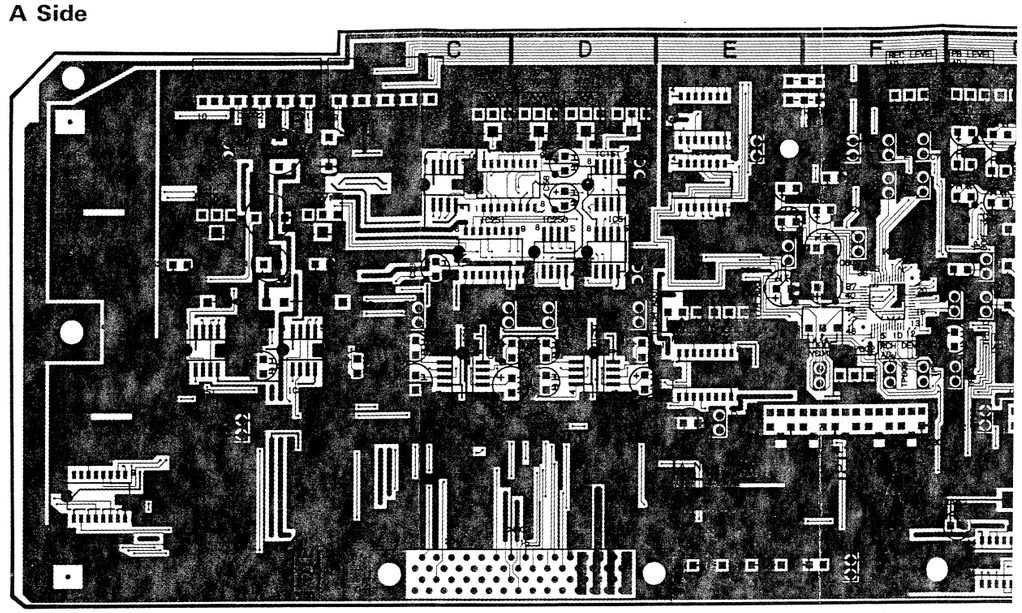

1-642-943-12 A SIDE

A Side is the same as Component Side

AU-156 BOARD
B Side

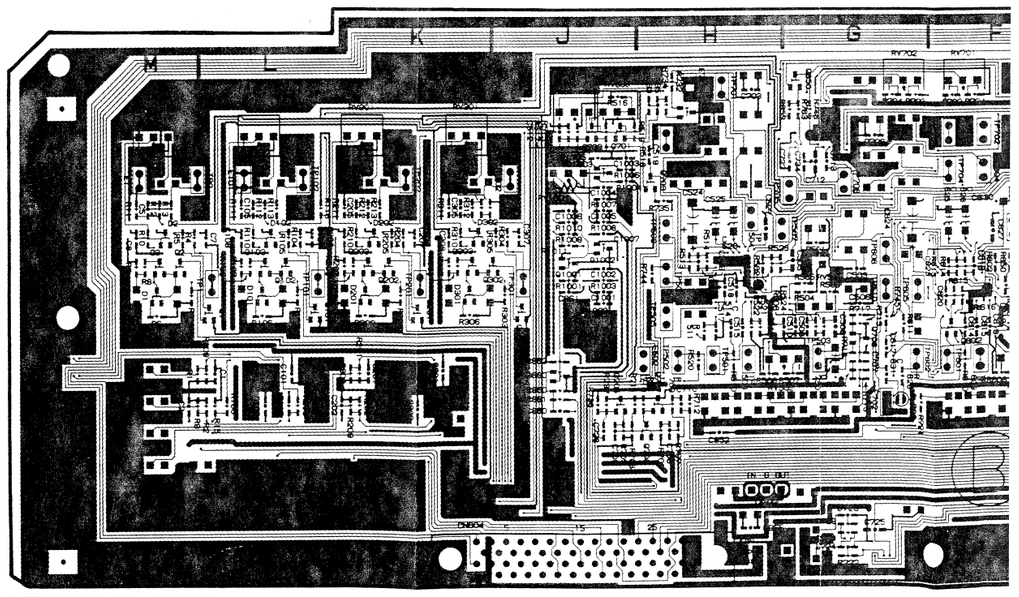

1-642-943-12 B SIDE

B Side is the same as Soldering Side

Serial No.: (J) 10031 and higher
Serial No.: (UC) 10071 and higher

AU-156 BOARD
A Side

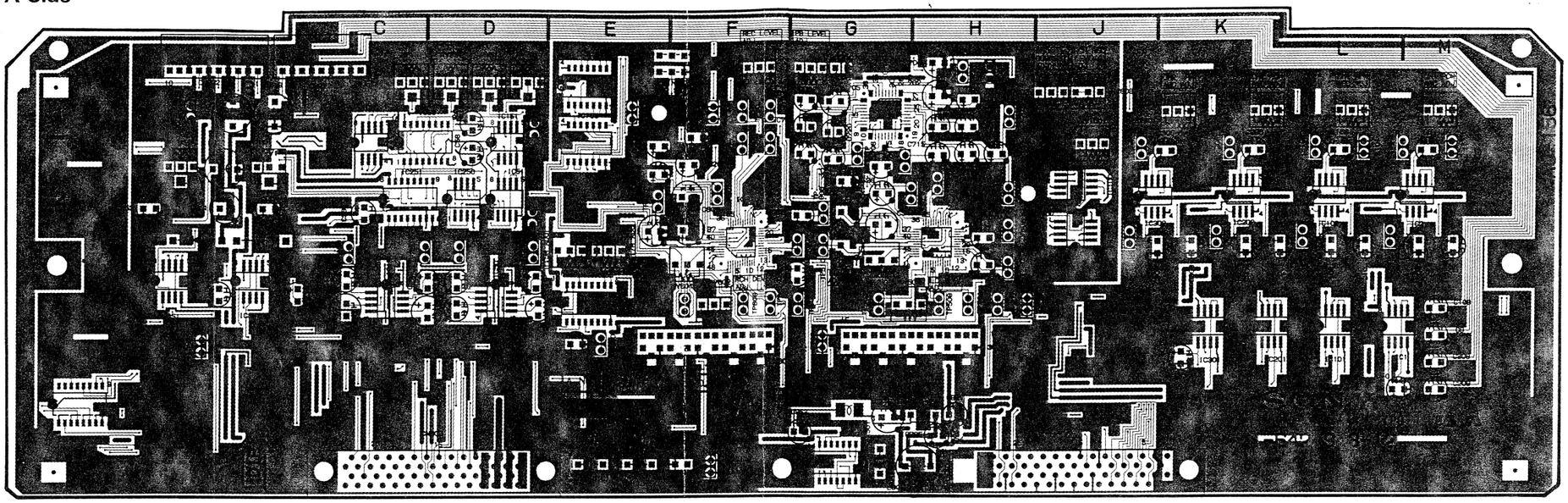

1-642-943-12 A SIDE

A Side is the same as Component Side

AU-156 BOARD
B Side

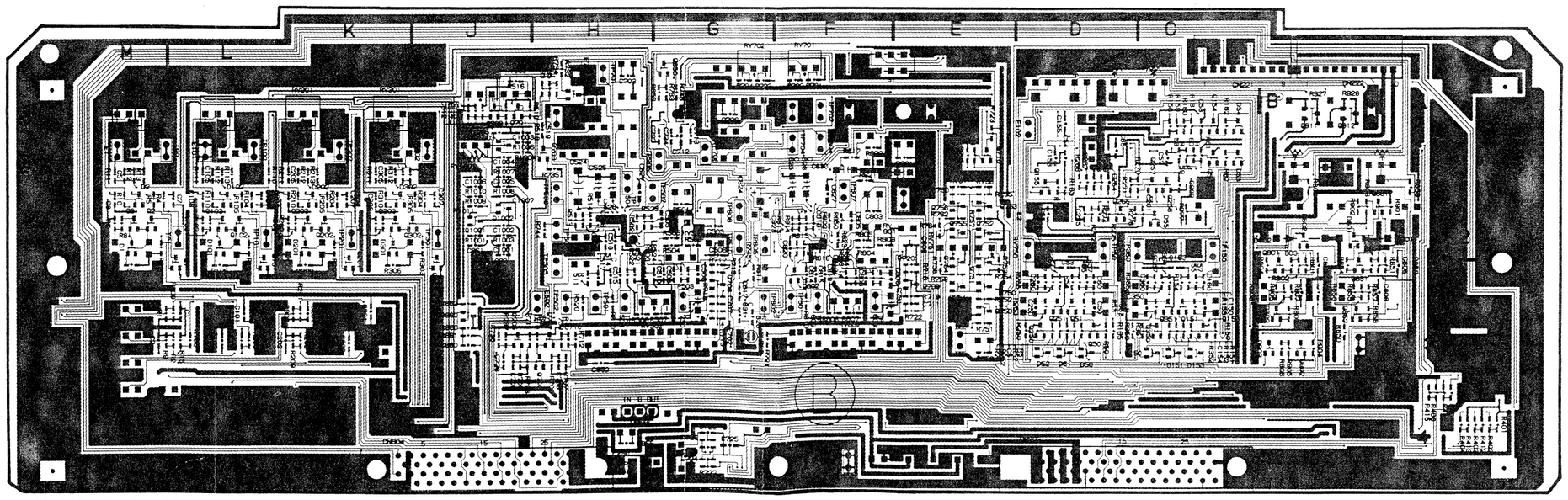

1-642-943-12 B SIDE

B Side is the same as Soldering Side

13-30 (b) 13-30 (b)

D-1
G-3
G-3
H-1
F-3
F-3
J-1
F-1
G-1
E-3
E-3
B-2
A-2
J-1

E-1

L-2
L-2
D-2
L-3
L-2
C-2
K-3
K-2
D-2
J-3
J-2
C-2
H-3
H-3
G-3
H-2
H-3
H-2
H-2
H-3
G-2
F-2
G-3
F-3
F-2
G-2
G-2
F-2
F-1
F-3
E-2
H-1
F-1
H-1
F-1
G-2
G-2
E-3

G-4

rk ; B SIDE mount.

CP-176 BOARD
A Side

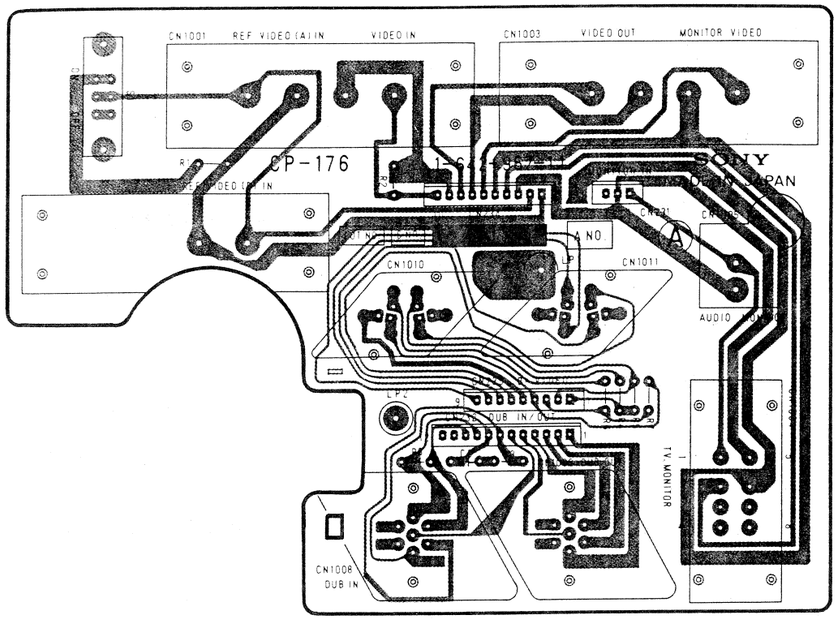

1-642-967-11 A SIDE

A Side is the same as Component Side

CP-176 BOARD
B Side

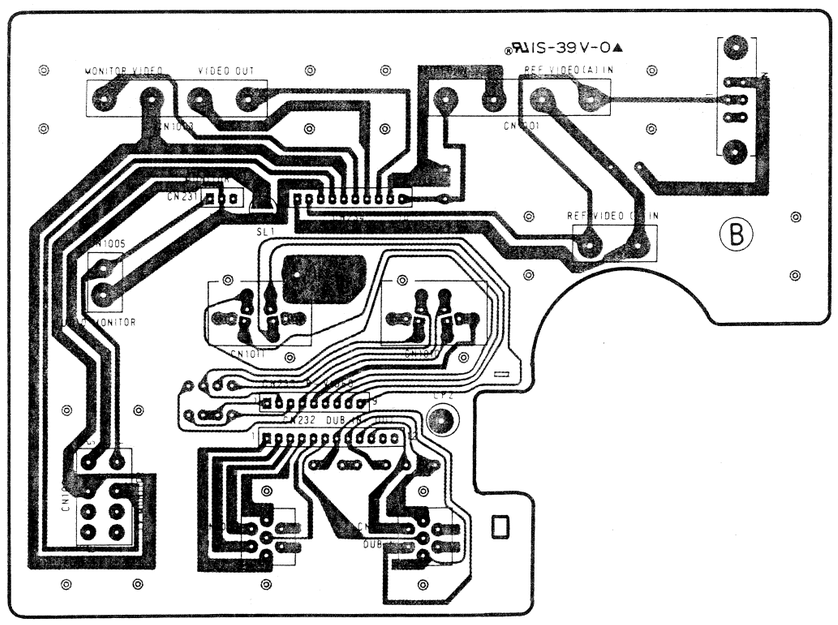

1-642-967-11 B SIDE

B Side is the same as Soldering Side

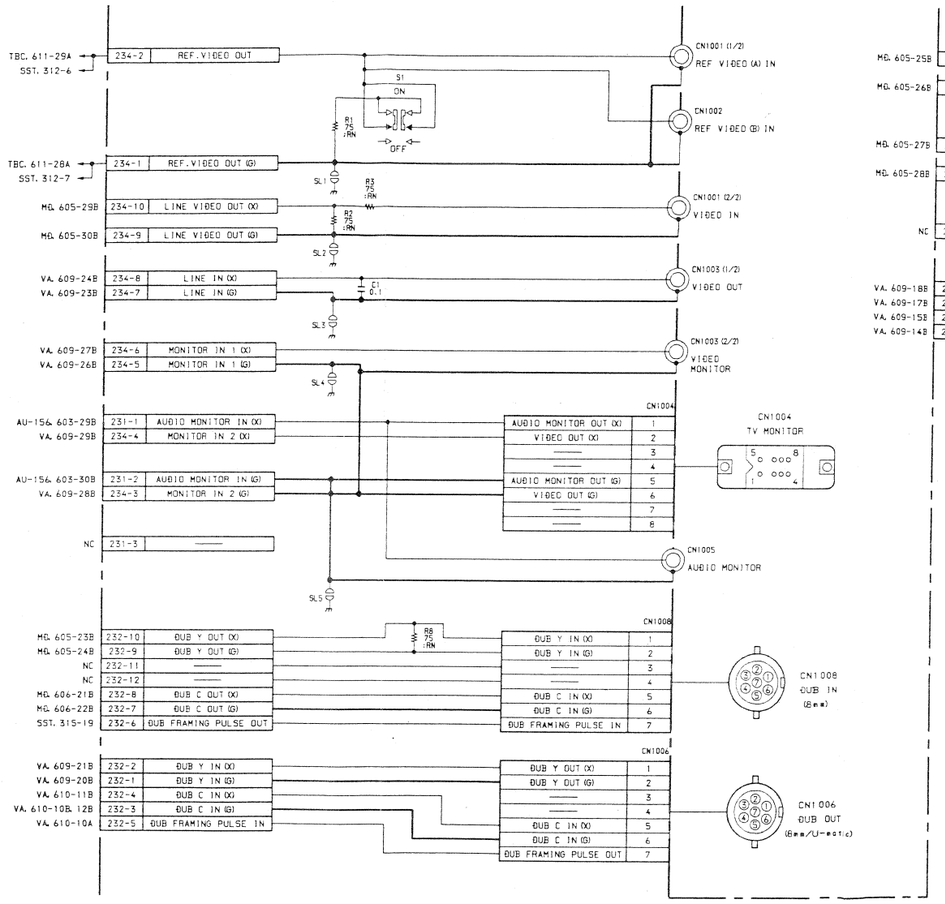

A | B | C | D | E | F | G | H

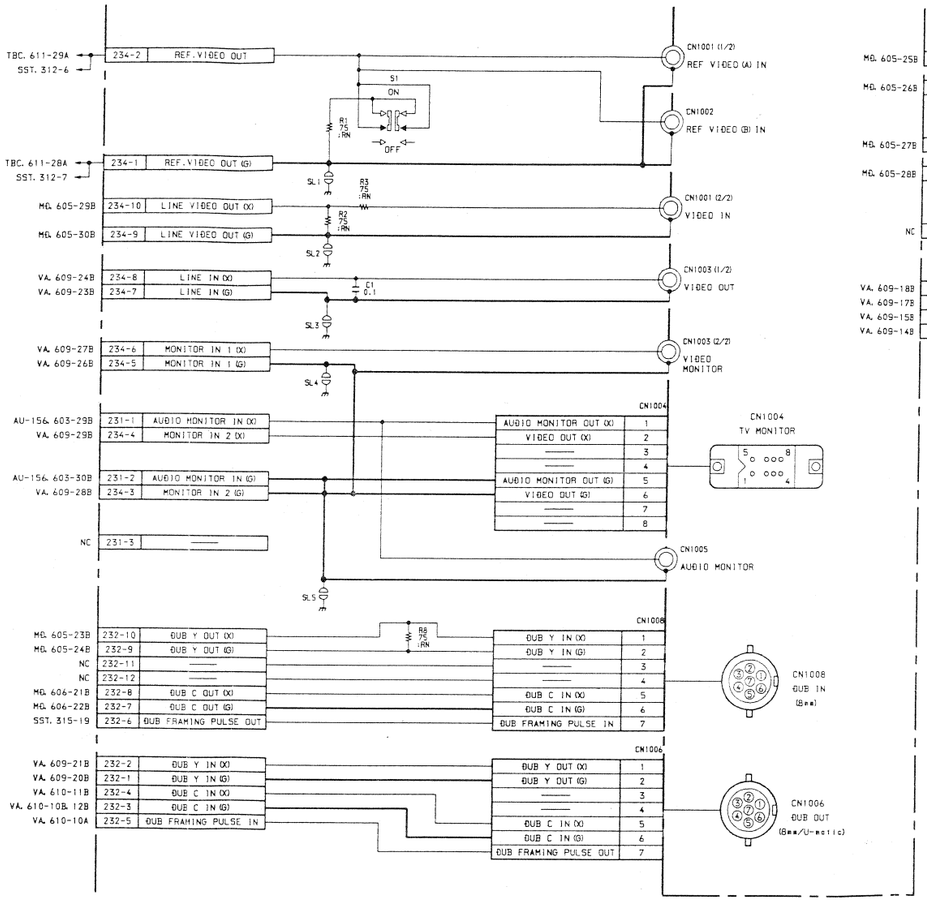

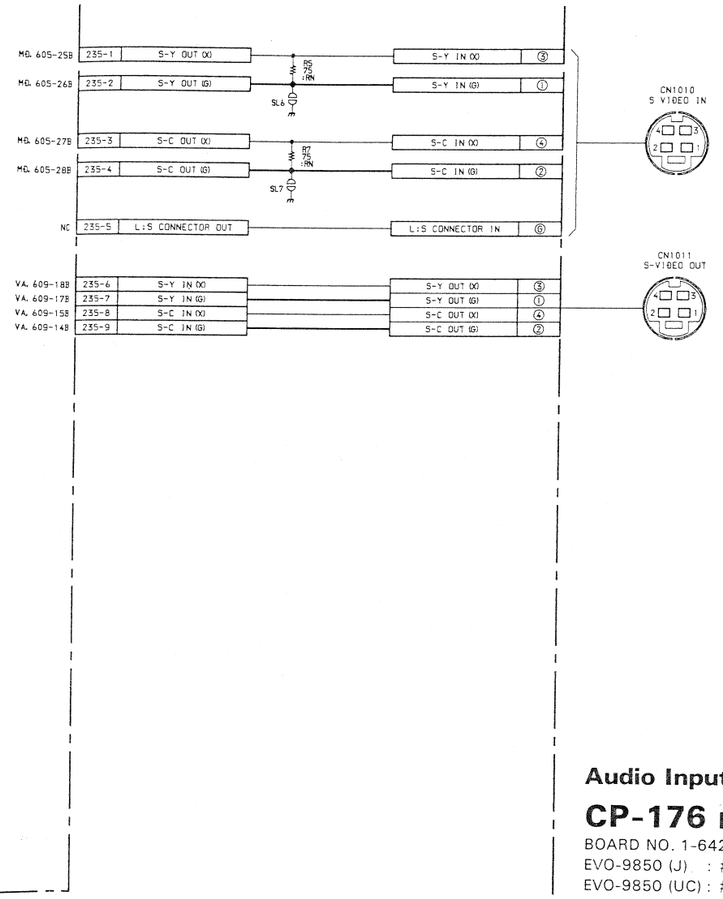

Audio Input/Output

CP-176 BOARD

BOARD NO. 1-642-967-11
EVO-9850 (J) : # 10001—
EVO-9850 (UC) : # 10031—

AU-156 (1-642-943-12)

CN221	C-1	IC705	G-4	RV351	D-1
CN222	B-1	IC751	E-3	RV501	G-3
CN603	D-4	IC801	B-3	RV502	G-3
CN604	J-4	IC851	A-3	RV503	H-1
		IC1001	J-2	RV601	F-3
D1	M-2 *	IC1002	J-2	RV602	F-3
D2	M-2 *			RV603	J-1
D50	D-3 *	Q1	L-2 *	RV701	F-1
D51	D-3 *	Q2	M-2 *	RV702	G-1
D52	D-3 *	Q3	M-2 *	RV750	E-3
D53	C-2 *	Q50	D-3 *	RV751	E-3
D54	C-1 *	Q51	D-3 *	RV801	B-2
D55	C-2 *	Q54	C-2 *	RV851	A-2
D101	L-2 *	Q101	L-2 *	RV1001	J-1
D102	L-2 *	Q102	L-2 *		
D150	D-3 *	Q103	L-2 *	S1	E-1
D151	C-3 *	Q150	C-3 *		
D153	C-3 *	Q151	C-3 *	TP1	L-2
D201	K-2 *	Q154	C-1 *	TP2	L-2
D202	K-2 *	Q155	D-2 *	TP50	D-2
D301	K-2 *	Q201	K-2 *	TP101	L-3
D302	K-2 *	Q202	K-2 *	TP102	L-2
D750	E-3 *	Q203	K-2 *	TP150	C-2
D751	E-3 *	Q250	D-3 *	TP201	K-3
D801	B-2 *	Q251	D-3 *	TP202	K-2
D802	B-2 *	Q255	D-2 *	TP250	D-2
D901	A-2	Q256	C-2 *	TP301	J-3
D902	B-2	Q257	C-2 *	TP302	J-2
D903	B-3 *	Q301	J-3 *	TP350	C-2
		Q302	K-2 *	TP501	H-3
E1	M-2	Q303	K-2 *	TP502	H-3
E2	D-2	Q350	C-3 *	TP503	G-3
E101	L-2	Q351	C-3 *	TP504	H-2
E102	D-1	Q602	F-3 *	TP505	H-3
E501	F-4	Q701	J-1 *	TP506	H-2
E502	J-3	Q702	J-1 *	TP507	H-2
E602	F-1	Q703	H-1 *	TP508	H-2
E701	H-1	Q704	H-1 *	TP509	H-3
E702	G-3	Q705	J-3 *	TP510	G-2
E750	E-1	Q706	H-3 *	TP601	F-2
E800	A-1	Q707	H-3 *	TP602	G-3
E801	B-3	Q708	G-3 *	TP603	F-3
		Q709	E-3 *	TP604	F-2
FL701	G-3	Q710	E-1 *	TP605	G-2
FL702	F-3	Q750	E-3 *	TP606	G-2
		Q751	E-3 *	TP607	F-2
IC1	L-3	Q752	E-2 *	TP608	F-1
IC2	M-2	Q753	E-2 *	TP609	F-3
IC50	D-3	Q754	E-2 *	TP610	E-2
IC51	D-2	Q755	E-2 *	TP701	H-1
IC52	C-1	Q756	E-2 *	TP702	F-1
IC53	C-1	Q801	B-2 *	TP703	H-1
IC101	L-3	Q802	B-3 *	TP704	F-1
IC102	L-2	Q851	B-3 *	TP705	G-2
IC150	C-3	Q852	B-3 *	TP706	G-2
IC151	D-1	Q860	J-3 *	TP750	E-3
IC201	K-3	Q901	B-2 *		
IC202	K-2	Q902	B-3 *	X501	G-4
IC250	D-2	Q1001	J-2 *		
IC251	C-2	Q1002	J-2 *	* mark ; B SIDE mount.	
IC301	K-3	Q1003	J-1 *		
IC302	J-2				
IC401	A-3	RV1	M-1		
IC501	H-2	RV51	D-1		
IC601	F-2	RV101	L-1		
IC701	G-1	RV151	C-1		
IC702	G-4	RV201	K-1		
IC703	E-1	RV251	D-1		
IC704	E-1	RV301	J-1		

Serial No.: (J) 10031 and higher
Serial No.: (UC) 10071 and higher

AU-156 BOARD
A Side

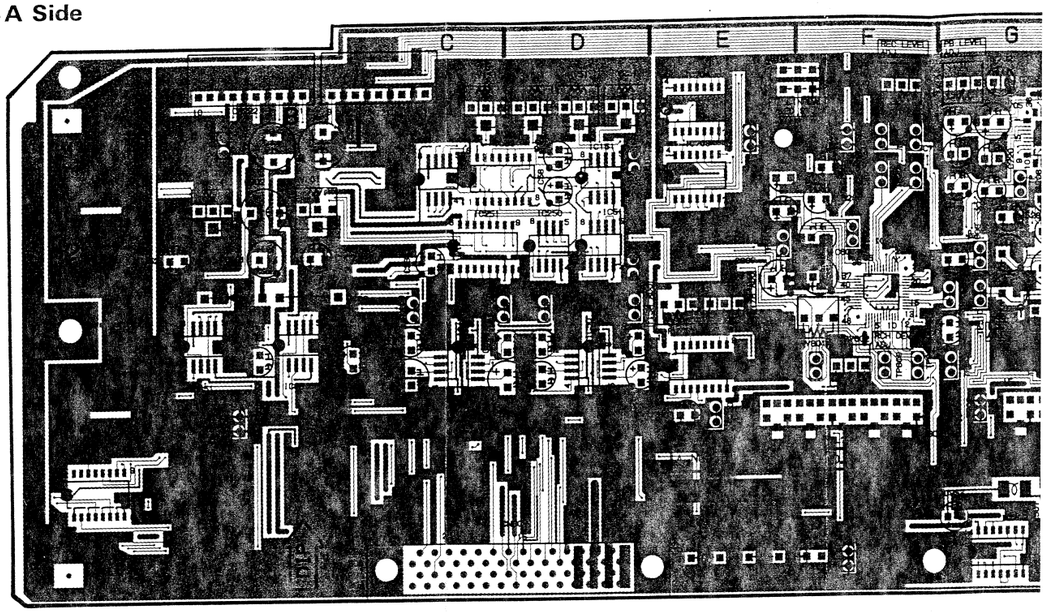

1-642-943-12 A SIDE

A Side is the same as Component Side

AU-156 BOARD
B Side

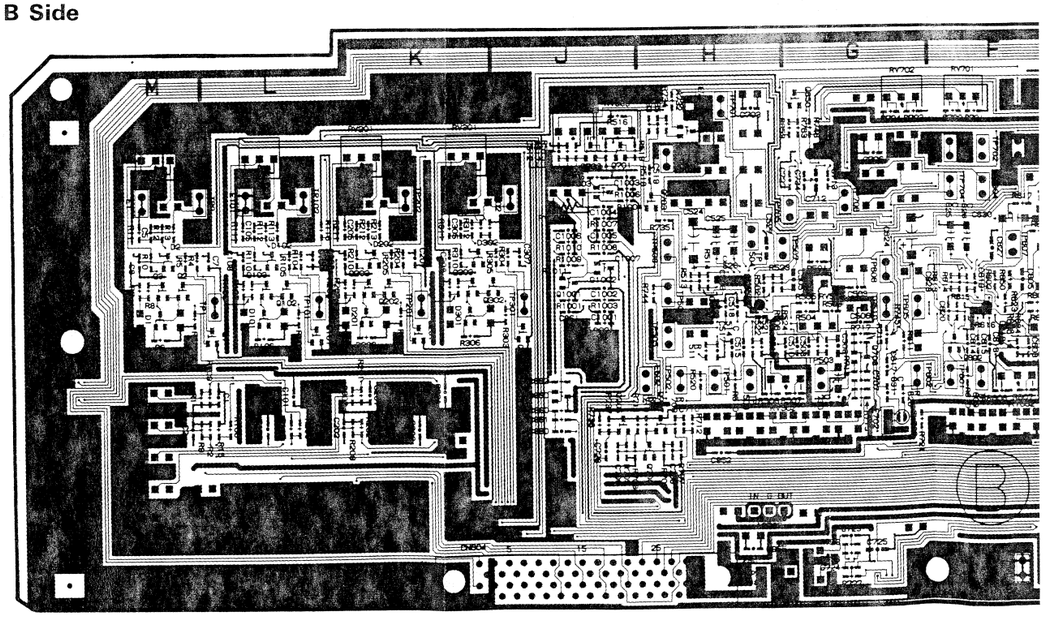

1-642-943-12 B SIDE

B Side is the same as Soldering Side

Serial No.: (J) 10031 and higher
Serial No.: (UC) 10071 and higher

AU-156 BOARD
A Side

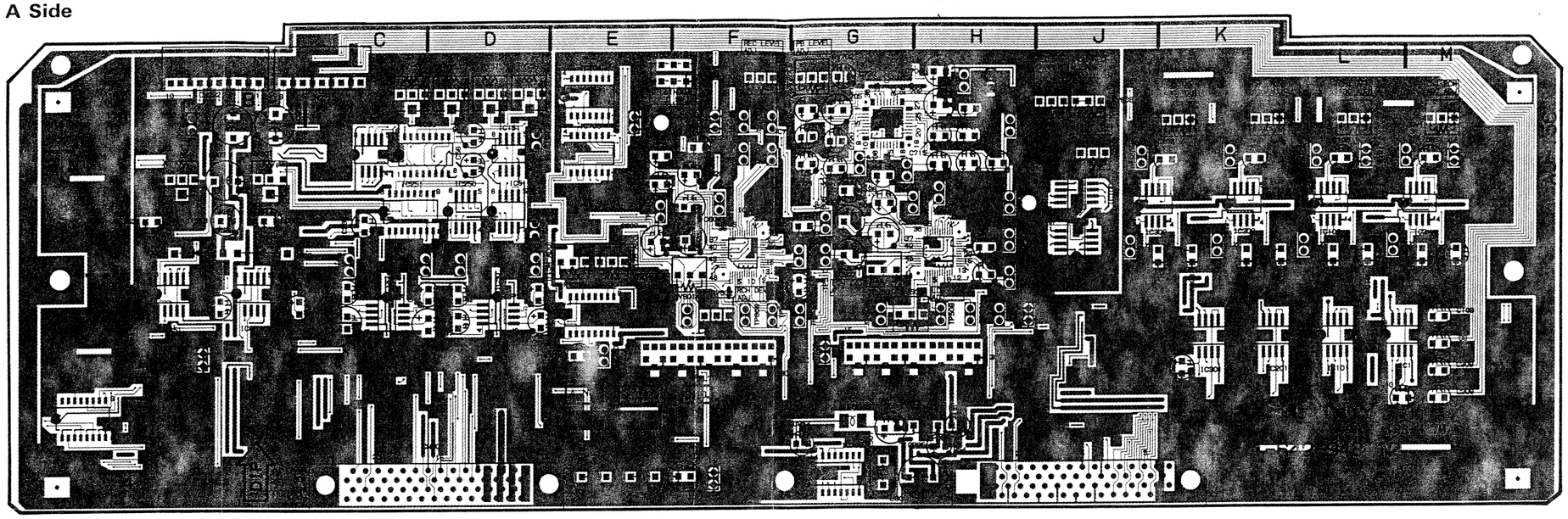

1-642-943-12 A SIDE

A Side is the same as Component Side

AU-156 BOARD
B Side

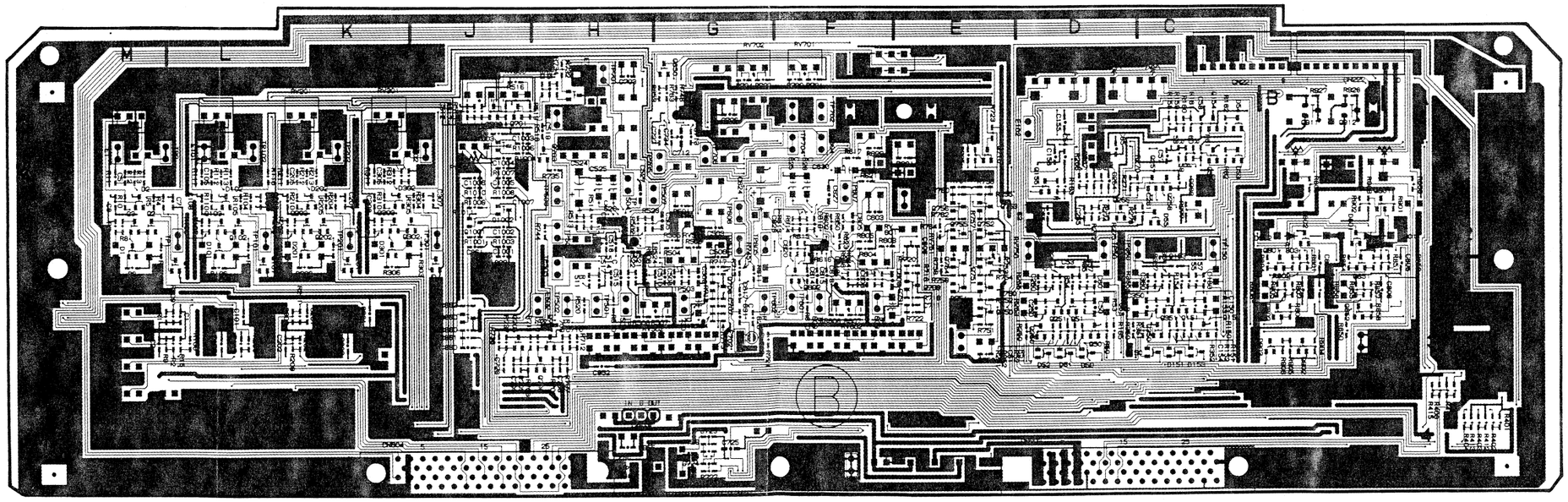

1-642-943-12 B SIDE

B Side is the same as Soldering Side

D-1
G-3
G-3
H-1
F-3
F-3
J-1
F-1
G-1
E-3
E-3
B-2
A-2
J-1

E-1

L-2
L-2
D-2
L-3
L-2
C-2
K-3
K-2
D-2
J-3
J-2
C-2
H-3
H-3
G-3
H-2
H-3
H-2
H-2
H-3
G-2
F-2
G-3
F-3
F-2
G-2
G-2
F-2
F-1
F-3
E-2
H-1
F-1
H-1
F-1
G-2
G-2
E-3

G-4

*k ; B SIDE mount.

AU-156 (1-642-943-11)

CN221	C-1	IC701	G-1	Q905	A-1 *	TP704	F-1
CN222	B-1	IC702	G-4	Q906	A-1 *	TP705	G-2
CN603	D-4	IC703	E-2	Q907	A-2 *	TP706	G-2
CN604	J-4	IC704	E-1	Q908	A-2 *	TP750	E-3
		IC705	H-4	Q909	A-2 *		
D0	L-1 *	IC750	E-2	Q910	A-2 *	X501	G-4
D1	M-2 *	IC751	E-3	Q1001	J-2 *		
D2	M-2 *	IC801	B-3	Q1002	J-2 *	* mark; B SIDE mount.	
D50	D-3 *	IC851	A-3	Q1003	J-1 *		
D51	D-3 *	IC1001	J-2				
D52	D-3 *	IC1002	J-2	RV1	M-1		
D53	C-2 *			RV51	D-1		
D54	C-1 *	Q0	M-2 *	RV101	L-1		
D55	C-2 *	Q1	L-2 *	RV151	C-1		
D100	L-1 *	Q2	M-2 *	RV201	K-1		
D101	L-2 *	Q3	M-2 *	RV251	D-1		
D102	L-2 *	Q50	D-3 *	RV301	K-1		
D150	C-3 *	Q51	D-3 *	RV351	D-1		
D151	C-3 *	Q54	C-2 *	RV501	G-2		
D153	C-3 *	Q100	L-2 *	RV502	G-3		
D201	K-2 *	Q101	L-2 *	RV503	J-1		
D202	K-2 *	Q102	L-2 *	RV601	F-3		
D301	K-2 *	Q103	L-2 *	RV602	F-3		
D302	K-2 *	Q150	C-3 *	RV603	J-1		
D401	A-3 *	Q151	C-3 *	RV701	F-1		
D750	E-3 *	Q154	C-1 *	RV702	G-1		
D751	E-3 *	Q155	D-2 *	RV750	E-2		
D801	B-2 *	Q200	K-2 *	RV751	E-2		
D802	B-2 *	Q201	K-2 *	RV801	B-2		
D901	B-2	Q202	K-2 *	RV851	A-2		
D902	B-2	Q203	K-2 *	RV1001	J-1		
D903	B-3 *	Q250	D-3 *				
		Q251	D-3 *	S1	F-1		
E1	M-1	Q255	D-2 *				
E2	D-2	Q256	C-2 *	TP1	L-2		
E101	L-1	Q257	C-2 *	TP2	M-1		
E102	D-1	Q300	J-2 *	TP50	D-2		
E501	F-4	Q301	J-2 *	TP101	L-2		
E502	H-3	Q302	J-2 *	TP102	L-1		
E602	F-1	Q303	K-2 *	TP150	C-2		
E701	H-1	Q350	C-3 *	TP201	K-2		
E702	G-3	Q351	C-3 *	TP202	K-1		
E750	E-1	Q602	F-3 *	TP250	D-2		
E800	B-1	Q701	J-1 *	TP301	J-2		
E801	B-3	Q702	J-1 *	TP302	J-1		
		Q703	H-2 *	TP350	C-2		
FL701	H-3	Q704	H-1 *	TP501	H-3		
FL702	F-3	Q705	J-3 *	TP502	H-3		
		Q706	H-3 *	TP503	G-3		
IC1	L-3	Q707	H-3 *	TP504	H-2		
IC2	M-2	Q708	G-3 *	TP505	H-3		
IC50	D-3	Q709	E-3 *	TP506	H-2		
IC51	D-2	Q710	E-2 *	TP507	G-2		
IC52	C-2	Q750	E-3 *	TP508	H-2		
IC53	C-2	Q751	E-3 *	TP509	H-3		
IC101	L-3	Q752	E-2 *	TP510	G-2		
IC102	L-2	Q753	E-2 *	TP601	F-3		
IC150	C-3	Q754	E-3 *	TP602	G-3		
IC151	D-2	Q755	E-2 *	TP603	F-3		
IC201	K-3	Q756	E-2 *	TP604	F-1		
IC202	K-2	Q801	B-3 *	TP605	G-2		
IC250	D-2	Q802	B-3 *	TP606	G-2		
IC251	C-2	Q851	B-3 *	TP607	F-2		
IC301	K-3	Q852	B-3 *	TP608	F-1		
IC302	J-2	Q860	J-3 *	TP609	F-3		
IC401	A-4	Q901	B-2 *	TP610	E-2		
IC402	A-3	Q902	B-3 *	TP701	H-1		
IC501	H-2	Q903	A-1 *	TP702	F-1		
IC601	F-2	Q904	A-1 *	TP703	H-1		

AU-156 BOARD
A Side

Serial No.: (J) 10001—10030
Serial No.: (UC) 10031—10070

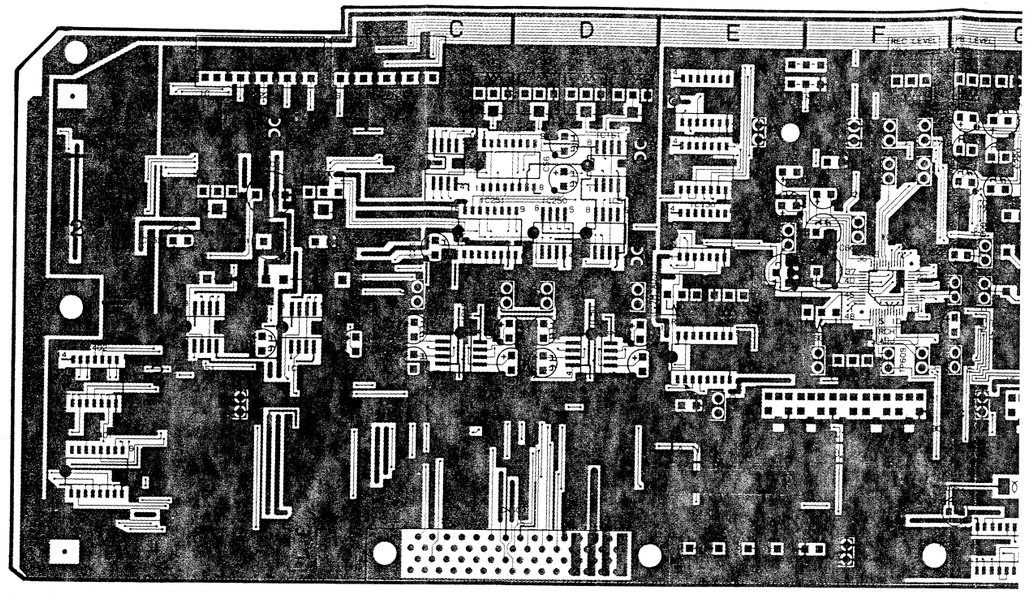

1-642-943-11 A SIDE

A Side is the same as Component Side

AU-156 BOARD
B Side

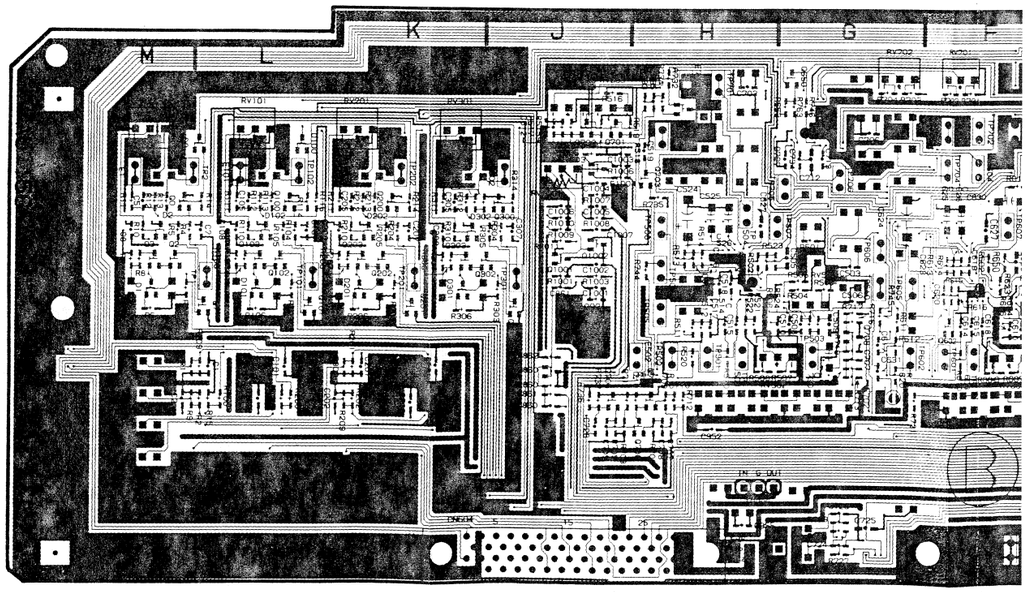

1-642-943-11 B SIDE

B Side is the same as Soldering Side

AU-156 BOARD
A Side

Serial No.: (J) 10001—10030
Serial No.: (UC) 10031—10070

·1 *	TP704	F-1
·1 *	TP705	G-2
·2 *	TP706	G-2
·2 *	TP750	E-3
·2 *		
·2 *	X501	G-4
2 *		
2 *	* mark; B SIDE mount.	
1 *		

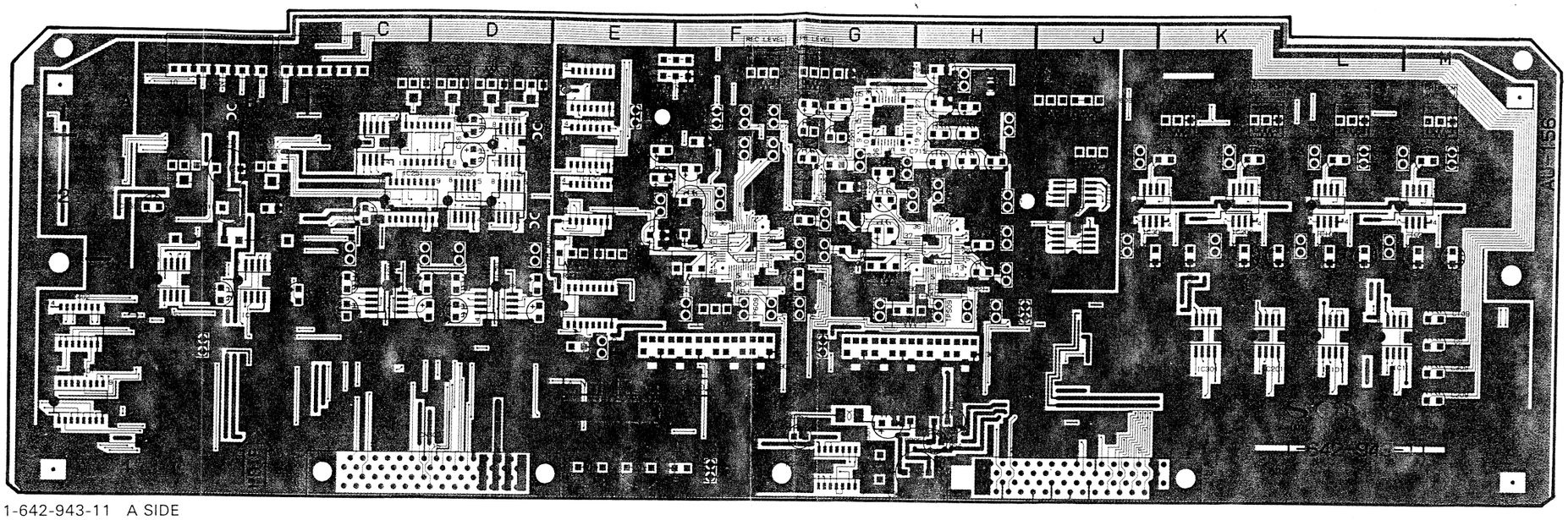

1-642-943-11 A SIDE

A Side is the same as Component Side

AU-156 BOARD
B Side

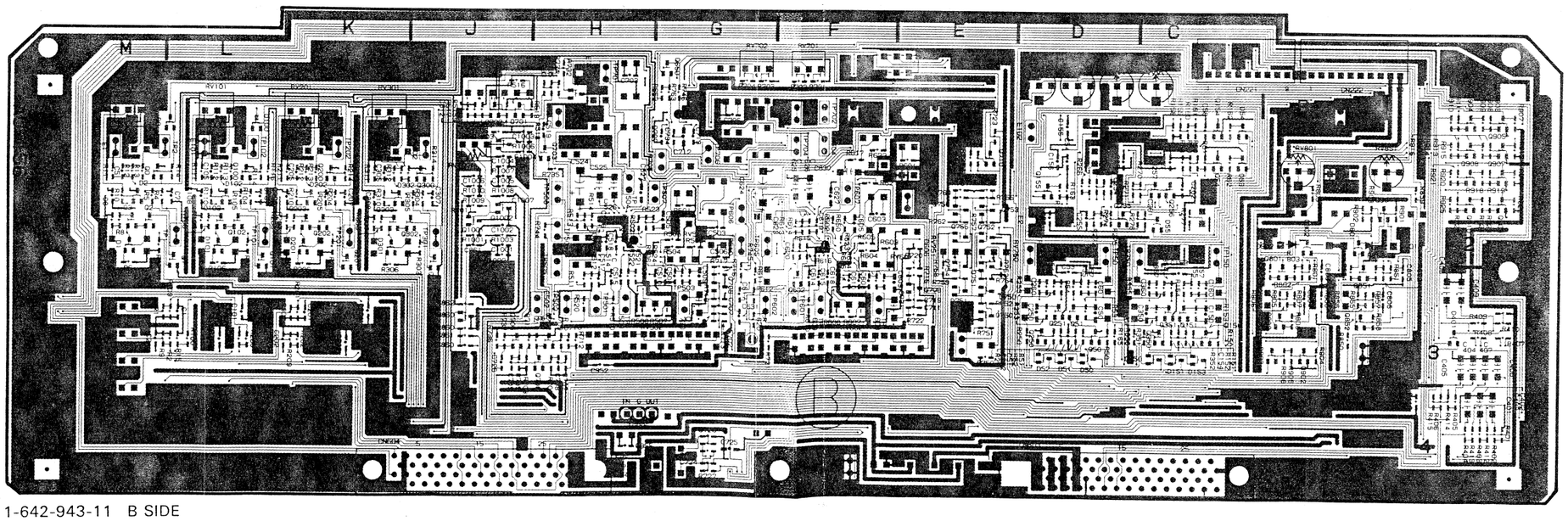

1-642-943-11 B SIDE

B Side is the same as Soldering Side

AU-156 (1-642-943-11)

CN221	C-1	IC701	G-1	Q905	A-1 *	TP704	F-1
CN222	B-1	IC702	G-4	Q906	A-1 *	TP705	G-2
CN603	D-4	IC703	E-2	Q907	A-2 *	TP706	G-2
CN604	J-4	IC704	E-1	Q908	A-2 *	TP750	E-3
		IC705	H-4	Q909	A-2 *		
D0	L-1 *	IC750	E-2	Q910	A-2 *	X501	G-4
D1	M-2 *	IC751	E-3	Q1001	J-2 *		
D2	M-2 *	IC801	B-3	Q1002	J-2 *	* mark ; B SIDE mount.	
D50	D-3 *	IC851	A-3	Q1003	J-1 *		
D51	D-3 *	IC1001	J-2				
D52	D-3 *	IC1002	J-2	RV1	M-1		
D53	C-2 *			RV51	D-1		
D54	C-1 *	Q0	M-2 *	RV101	L-1		
D55	C-2 *	Q1	L-2 *	RV151	C-1		
D100	L-1 *	Q2	M-2 *	RV201	K-1		
D101	L-2 *	Q3	M-2 *	RV251	D-1		
D102	L-2 *	Q50	D-3 *	RV301	K-1		
D150	C-3 *	Q51	D-3 *	RV351	D-1		
D151	C-3 *	Q54	C-2 *	RV501	G-2		
D153	C-3 *	Q100	L-2 *	RV502	G-3		
D201	K-2 *	Q101	L-2 *	RV503	J-1		
D202	K-2 *	Q102	L-2 *	RV601	F-3		
D301	K-2 *	Q103	L-2 *	RV602	F-3		
D302	K-2 *	Q150	C-3 *	RV603	J-1		
D401	A-3 *	Q151	C-3 *	RV701	F-1		
D750	E-3 *	Q154	C-1 *	RV702	G-1		
D751	E-3 *	Q155	D-2 *	RV750	E-2		
D801	B-2 *	Q200	K-2 *	RV751	E-2		
D802	B-2 *	Q201	K-2 *	RV801	B-2		
D901	B-2	Q202	K-2 *	RV851	A-2		
D902	B-2	Q203	K-2 *	RV1001	J-1		
D903	B-3 *	Q250	D-3 *				
		Q251	D-3 *	S1	F-1		
E1	M-1	Q255	D-2 *				
E2	D-2	Q256	C-2 *	TP1	L-2		
E101	L-1	Q257	C-2 *	TP2	M-1		
E102	D-1	Q300	J-2 *	TP50	D-2		
E501	F-4	Q301	J-2 *	TP101	L-2		
E502	H-3	Q302	J-2 *	TP102	L-1		
E602	F-1	Q303	K-2 *	TP150	C-2		
E701	H-1	Q350	C-3 *	TP201	K-2		
E702	G-3	Q351	C-3 *	TP202	K-1		
E750	E-1	Q602	F-3 *	TP250	D-2		
E800	B-1	Q701	J-1 *	TP301	J-2		
E801	B-3	Q702	J-1 *	TP302	J-1		
		Q703	H-2 *	TP350	C-2		
FL701	H-3	Q704	H-1 *	TP501	H-3		
FL702	F-3	Q705	J-3 *	TP502	H-3		
		Q706	H-3 *	TP503	G-3		
IC1	L-3	Q707	H-3 *	TP504	H-2		
IC2	M-2	Q708	G-3 *	TP505	H-3		
IC50	D-3	Q709	E-3 *	TP506	H-2		
IC51	D-2	Q710	E-2 *	TP507	G-2		
IC52	C-2	Q750	E-3 *	TP508	H-2		
IC53	C-2	Q751	E-3 *	TP509	H-3		
IC101	L-3	Q752	E-2 *	TP510	G-2		
IC102	L-2	Q753	E-2 *	TP601	F-3		
IC150	C-3	Q754	E-3 *	TP602	G-3		
IC151	D-2	Q755	E-2 *	TP603	F-3		
IC201	K-3	Q756	E-2 *	TP604	F-1		
IC202	K-2	Q801	B-3 *	TP605	G-2		
IC250	D-2	Q802	B-3 *	TP606	G-2		
IC251	C-2	Q851	B-3 *	TP607	F-2		
IC301	K-3	Q852	B-3 *	TP608	F-1		
IC302	J-2	Q860	J-3 *	TP609	F-3		
IC401	A-4	Q901	B-2 *	TP610	E-2		
IC402	A-3	Q902	B-3 *	TP701	H-1		
IC501	H-2	Q903	A-1 *	TP702	F-1		
IC601	F-2	Q904	A-1 *	TP703	H-1		

Serial No.: (J) 10001—10030
Serial No.: (UC) 10031—10070

AU-156 BOARD
A Side

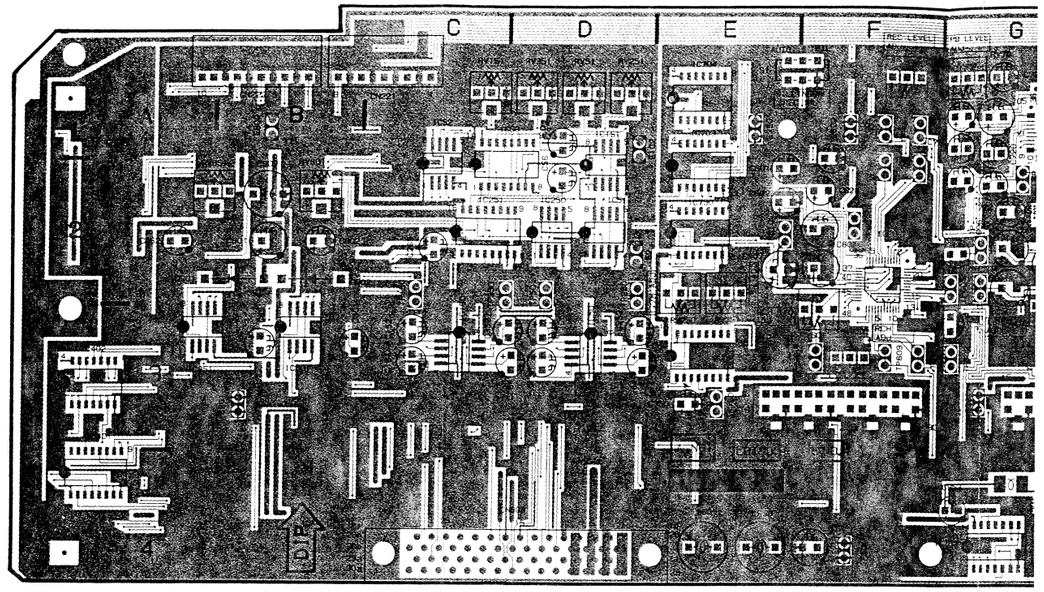

1-642-943-11 A SIDE

A Side is the same as Component Side

AU-156 BOARD
B Side

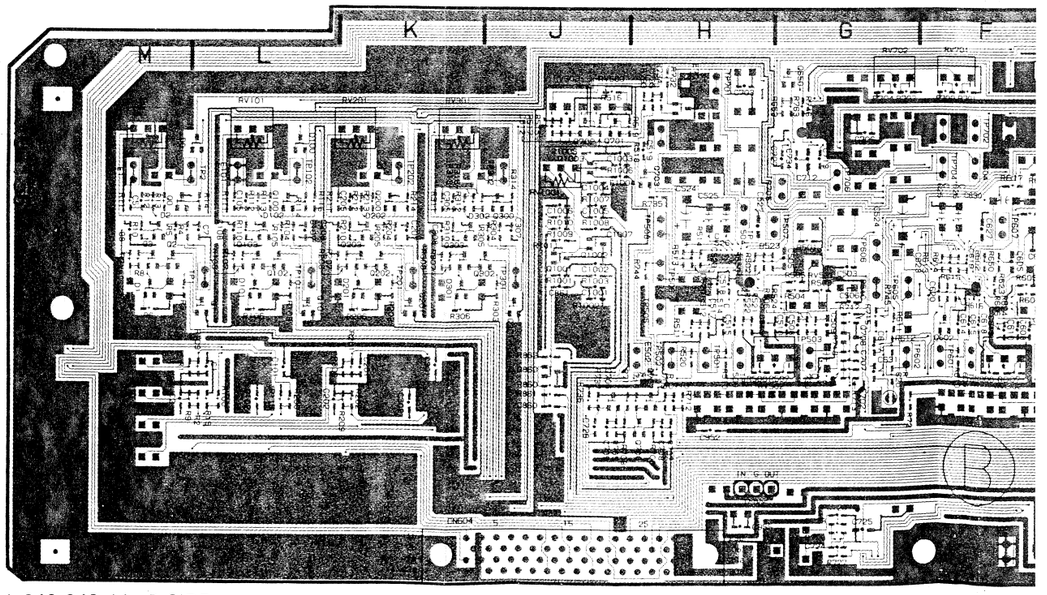

1-642-943-11 B SIDE

B Side is the same as Soldering Side

Serial No.: (J) 10001—10030
Serial No.: (UC) 10031—10070

AU-156 BOARD
A Side

1 * TP704 F-1
1 * TP705 G-2
2 * TP706 G-2
2 * TP750 E-3
2 *
2 * X501 G-4
* mark; B SIDE mount.

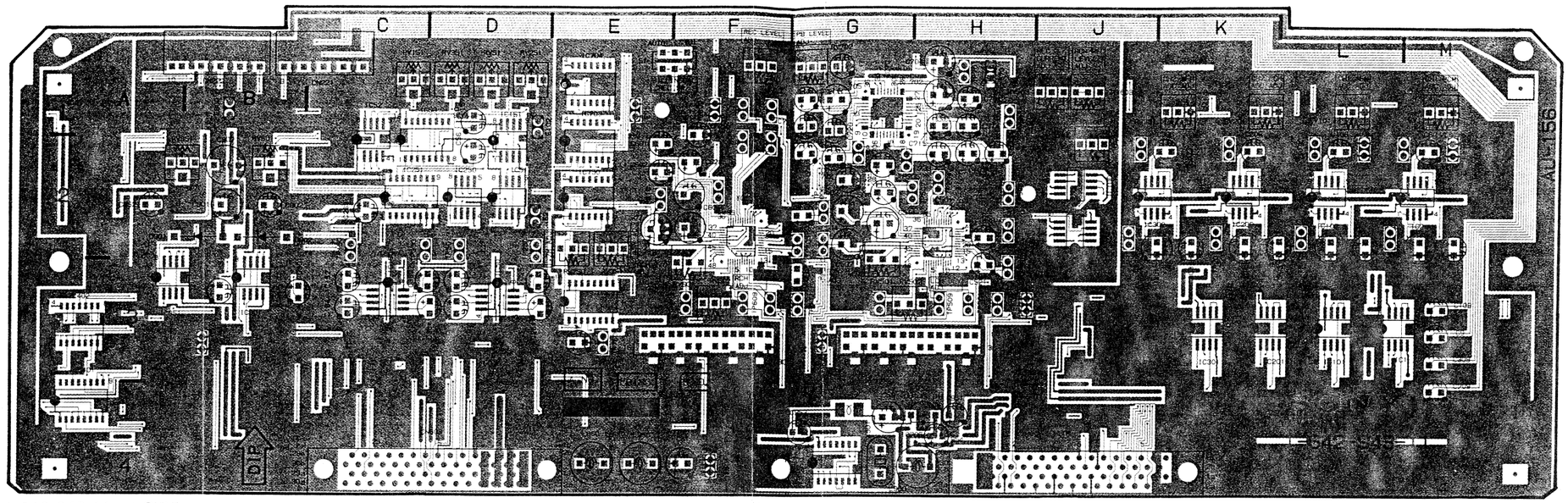

1-642-943-11 A SIDE

A Side is the same as Component Side

AU-156 BOARD
B Side

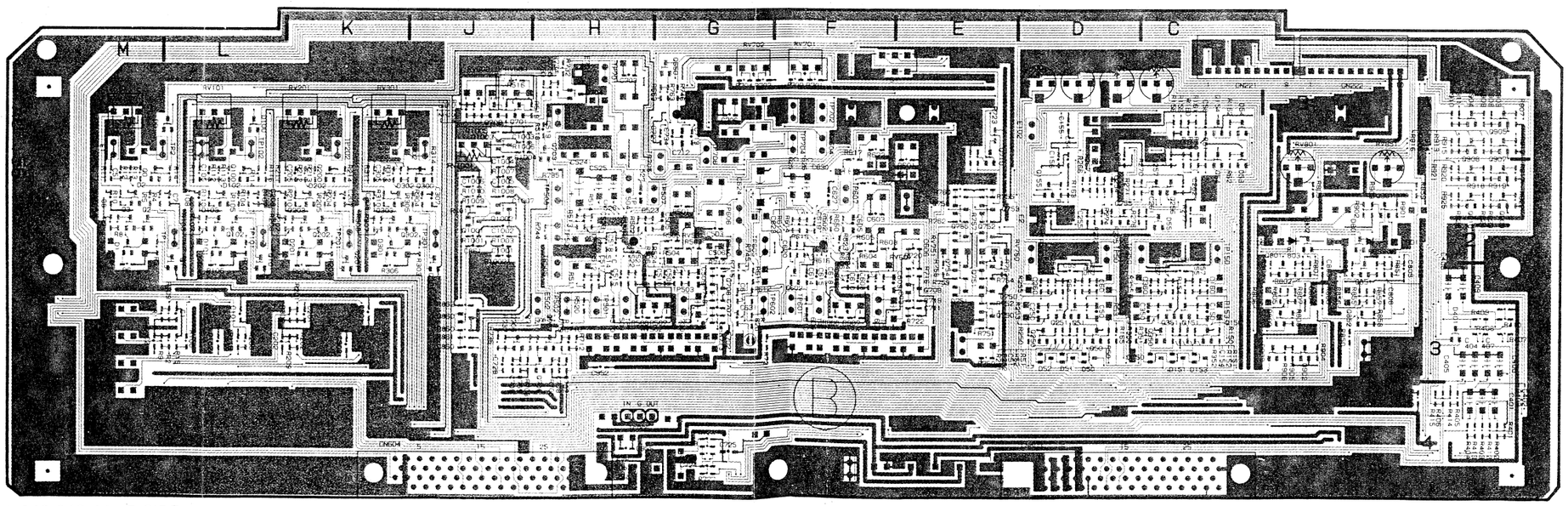

1-642-943-11 B SIDE

B Side is the same as Soldering Side

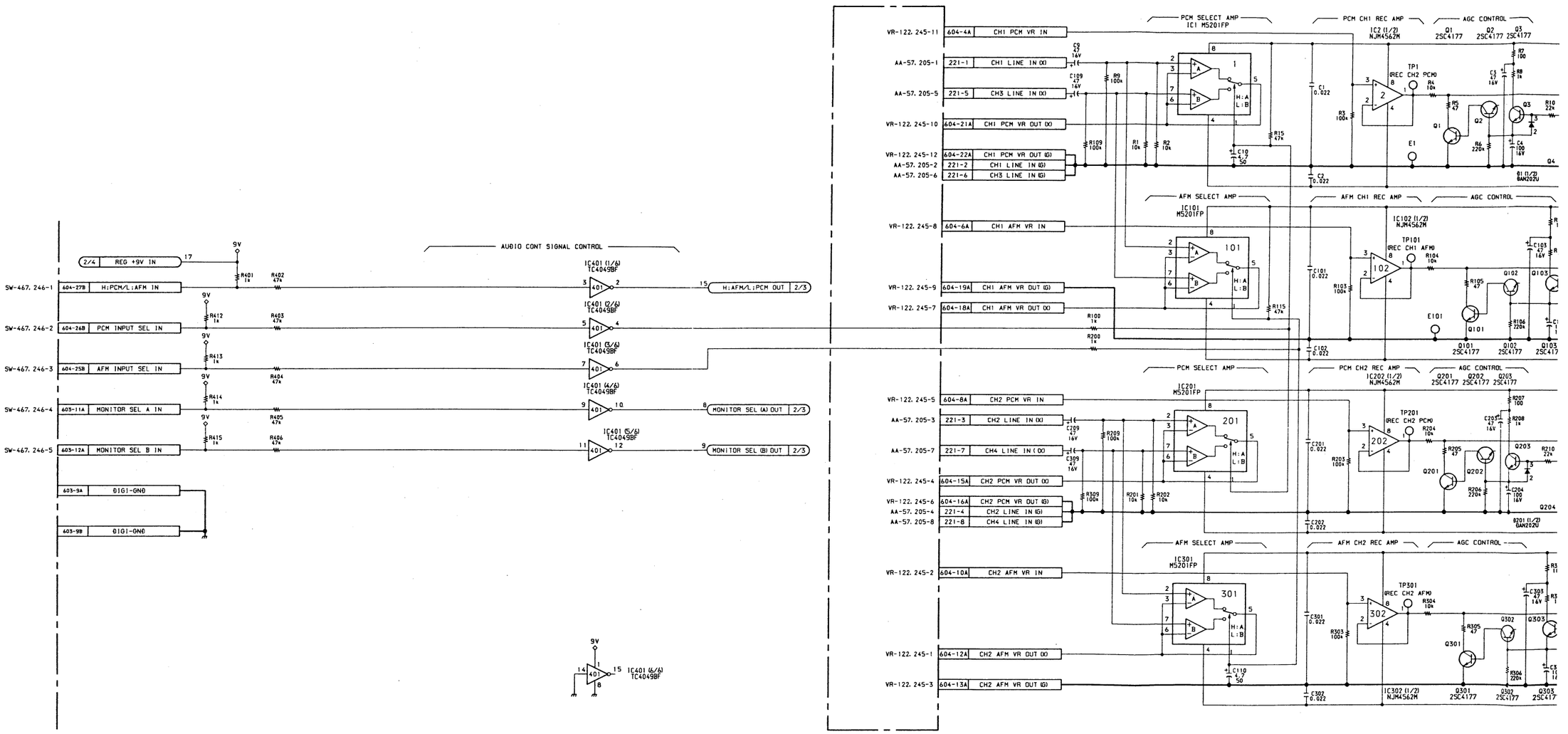
AUDIO CONT SIGNAL CONTROL
PCM SELECT AMP
IC1 M5201FP
PCM CH1 REC AMP
AGC CONTROL
AFM SELECT AMP
AFM CH1 REC AMP
PCM SELECT AMP
PCM CH2 REC AMP
AFM SELECT AMP
AFM CH2 REC AMP
2/4 REG +9V IN
H:PCM/L:AFM IN
PCM INPUT SEL IN
AFM INPUT SEL IN
MONITOR SEL A IN
MONITOR SEL B IN
DIGI-GND
H:AFM/L:PCM OUT
MONITOR SEL (A) OUT
MONITOR SEL (B) OUT
CH1 PCM VR IN
CH1 LINE IN (X)
CH3 LINE IN (X)
CH1 PCM VR OUT (X)
CH1 PCM VR OUT (G)
CH1 LINE IN (G)
CH3 LINE IN (G)
CH1 AFM VR IN
CH1 AFM VR OUT (G)
CH1 AFM VR OUT (X)
CH2 PCM VR IN
CH2 LINE IN (X)
CH4 LINE IN (X)
CH2 PCM VR OUT (X)
CH2 PCM VR OUT (G)
CH2 LINE IN (G)
CH4 LINE IN (G)
CH2 AFM VR IN
CH2 AFM VR OUT (X)
CH2 AFM VR OUT (G)
IC401 (1/6) TC4049BF
IC401 (2/6) TC4049BF
IC401 (3/6) TC4049BF
IC401 (4/6) TC4049BF
IC401 (5/6) TC4049BF
IC401 (6/6) TC4049BF
IC2 (1/2) NJM4562M
IC101 M5201FP
IC102 (1/2) NJM4562M
IC201 M5201FP
IC202 (1/2) NJM4562M
IC301 M5201FP
IC302 (1/2) NJM4562M
TP1 (REC CH2 PCM)
TP101 (REC CH1 AFM)
TP201 (REC CH2 PCM)
TP301 (REC CH2 AFM)
Q1 2SC4177
Q2 2SC4177
Q3 2SC4177
Q101 2SC4177
Q102 2SC4177
Q103 2SC4177
Q201 2SC4177
Q202 2SC4177
Q203 2SC4177
Q301 2SC4177
Q302 2SC4177
Q303 2SC4177
D1 (1/2) BAN202U
D101 (1/2) BAN202U
D201 (1/2) BAN202U
D301 (1/2) BAN202U
H:A L:B

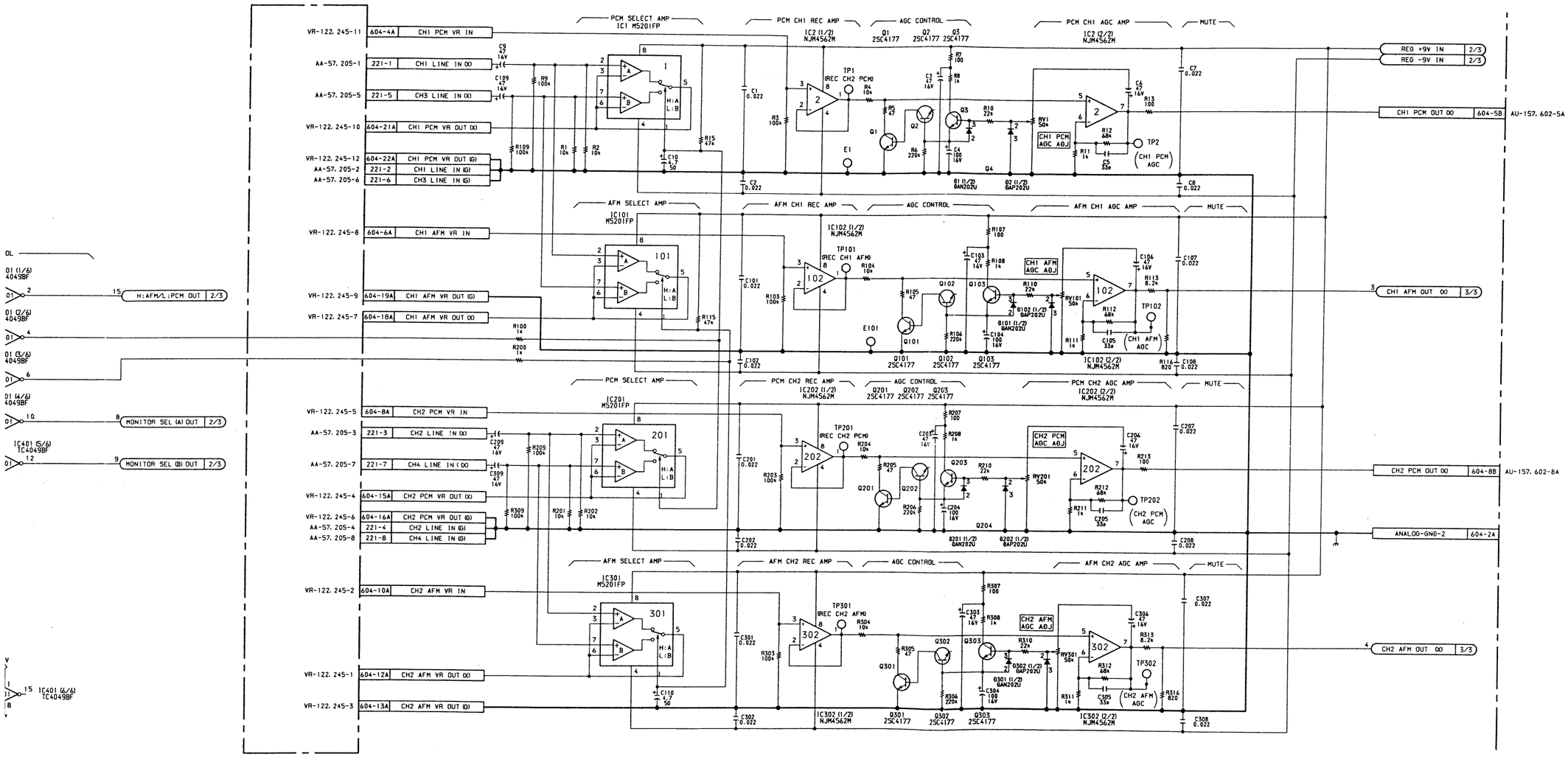

Audio REC/PB Amplifier

AU-156 BOARD (1/3)

BOARD NO. 1-642-943-11, 12
EVO-9850 (J) : # 10001—
EVO-9850 (UC) : # 10031—

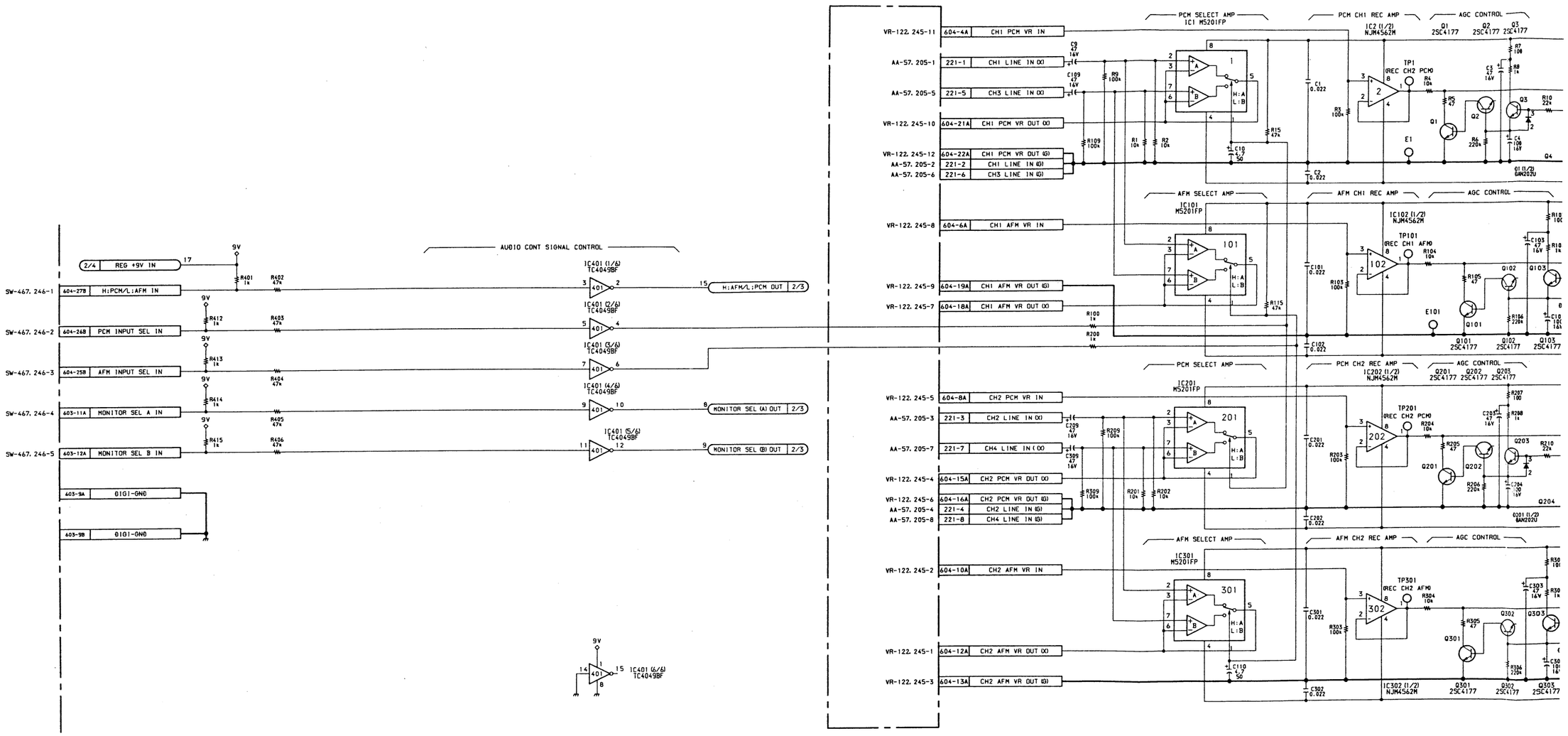
AUDIO CONT SIGNAL CONTROL
2/4 REG +9V IN 17
9V
R401 1k
R402 47k
SW-467. 246-1 604-27B H:PCM/L:AFM IN
IC401 (1/6) TC4049BF
3 401 2
15 H:AFM/L:PCM OUT 2/3
R412 1k
R403 47k
SW-467. 246-2 604-26B PCM INPUT SEL IN
IC401 (2/6) TC4049BF
5 401 4
R413 1k
R404 47k
SW-467. 246-3 604-25B AFM INPUT SEL IN
IC401 (3/6) TC4049BF
7 401 6
R414 1k
R405 47k
SW-467. 246-4 603-11A MONITOR SEL A IN
IC401 (4/6) TC4049BF
9 401 10
8 MONITOR SEL (A) OUT 2/3
R415 1k
R406 47k
SW-467. 246-5 603-12A MONITOR SEL B IN
IC401 (5/6) TC4049BF
11 401 12
9 MONITOR SEL (B) OUT 2/3
603-9A DIGI-GND
603-9B DIGI-GND
9V
14 401 15 IC401 (6/6) TC4049BF
1
8
PCM SELECT AMP
IC1 M5201FP
PCM CH1 REC AMP
IC2 (1/2) NJM4562M
AGC CONTROL
Q1 2SC4177
Q2 2SC4177
Q3 2SC4177
VR-122. 245-11 604-4A CH1 PCM VR IN
AA-57. 205-1 221-1 CH1 LINE IN (O)
AA-57. 205-5 221-5 CH3 LINE IN (O)
VR-122. 245-10 604-21A CH1 PCM VR OUT (O)
VR-122. 245-12 604-22A CH1 PCM VR OUT (G)
AA-57. 205-2 221-2 CH1 LINE IN (G)
AA-57. 205-6 221-6 CH3 LINE IN (G)
C9 47 16V
C109 47 16V
R9 100k
R109 100k
R1 10k
R2 10k
C10 4.7 50
R15 47k
C1 0.022
C2 0.022
R3 100k
TP1 (REC CH2 PCM)
R4 10k
R5 47
R6 220k
C4 100 16V
R7 100
C5 47 16V
R8 1k
R10 22k
E1
Q4
Q1 (1/2) BAN202U
AFM SELECT AMP
IC101 M5201FP
AFM CH1 REC AMP
IC102 (1/2) NJM4562M
AGC CONTROL
VR-122. 245-8 604-6A CH1 AFM VR IN
VR-122. 245-9 604-19A CH1 AFM VR OUT (G)
VR-122. 245-7 604-18A CH1 AFM VR OUT (O)
R100 1k
R200 1k
C101 0.022
C102 0.022
R103 100k
R115 47k
TP101 (REC CH1 AFM)
R104 10k
R105 47
R106 220k
C103 47 16V
R101 1k
C101 100 16V
E101
Q101 2SC4177
Q102 2SC4177
Q103 2SC4177
PCM SELECT AMP
IC201 M5201FP
PCM CH2 REC AMP
IC202 (1/2) NJM4562M
AGC CONTROL
Q201 2SC4177
Q202 2SC4177
Q203 2SC4177
VR-122. 245-5 604-8A CH2 PCM VR IN
AA-57. 205-3 221-3 CH2 LINE IN (O)
AA-57. 205-7 221-7 CH4 LINE IN (O)
VR-122. 245-4 604-15A CH2 PCM VR OUT (O)
VR-122. 245-6 604-16A CH2 PCM VR OUT (G)
AA-57. 205-4 221-4 CH2 LINE IN (G)
AA-57. 205-8 221-8 CH4 LINE IN (G)
C209 47 16V
C309 47 16V
R209 100k
R309 100k
R201 10k
R202 10k
C110 4.7 50
C201 0.022
C202 0.022
R203 100k
TP201 (REC CH2 PCM)
R204 10k
R205 47
R206 220k
C204 100 16V
C205 47 16V
R287 100
R288 1k
R210 22k
Q204
Q201 (1/2) BAN202U
AFM SELECT AMP
IC301 M5201FP
AFM CH2 REC AMP
IC302 (1/2) NJM4562M
AGC CONTROL
VR-122. 245-2 604-10A CH2 AFM VR IN
VR-122. 245-1 604-12A CH2 AFM VR OUT (O)
VR-122. 245-3 604-13A CH2 AFM VR OUT (G)
C301 0.022
C302 0.022
R303 100k
TP301 (REC CH2 AFM)
R304 10k
R305 47
R306 220k
C303 47 16V
R301 1k
Q301 2SC4177
Q302 2SC4177
Q303 2SC4177

A | B | C | D | E | F | G | H

AU-156 (1/3)

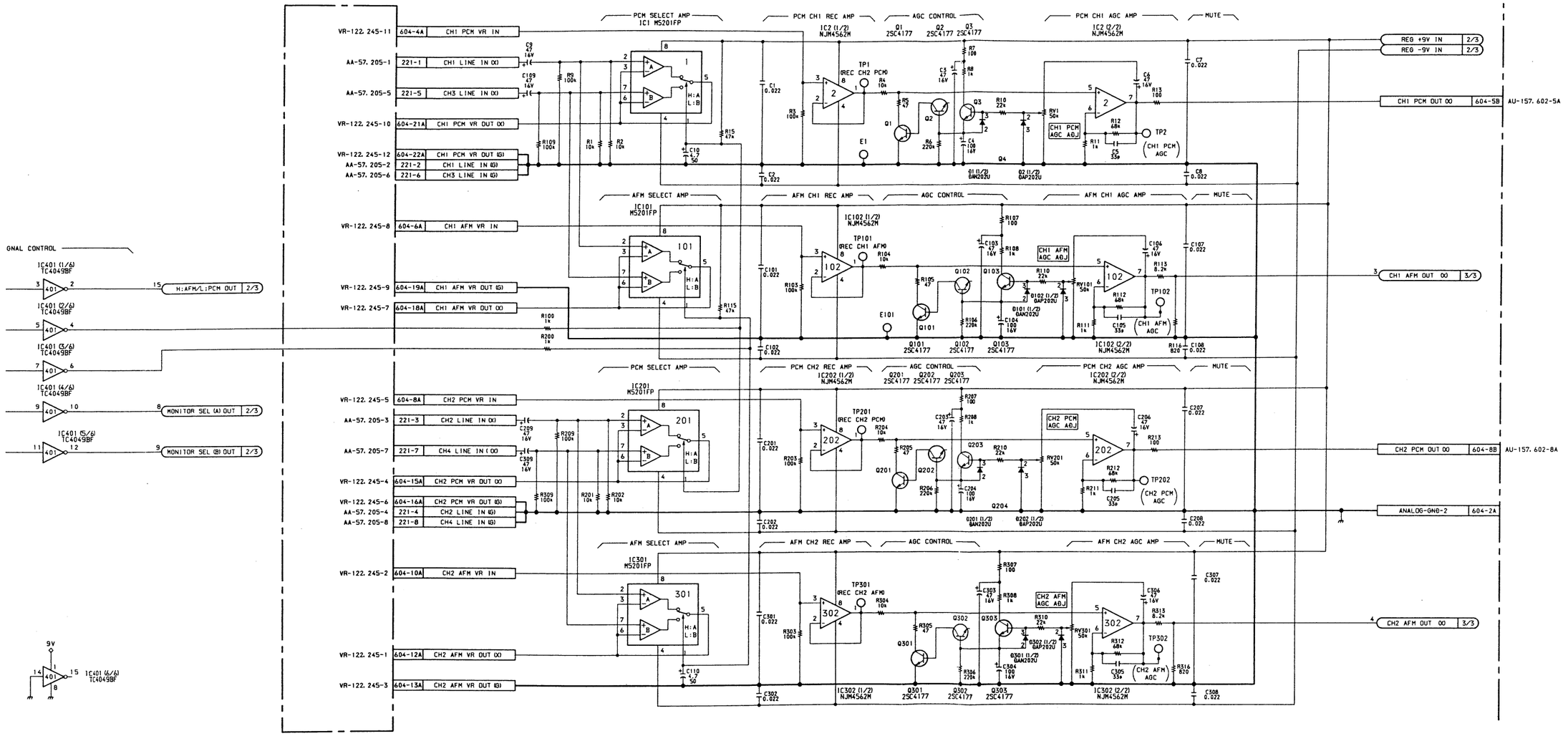

Audio REC/PB Amplifier

AU-156 BOARD (1/3)

BOARD NO. 1-642-943-11, 12
EVO-9850 (J) : # 10001—
EVO-9850 (UC) : # 10031—

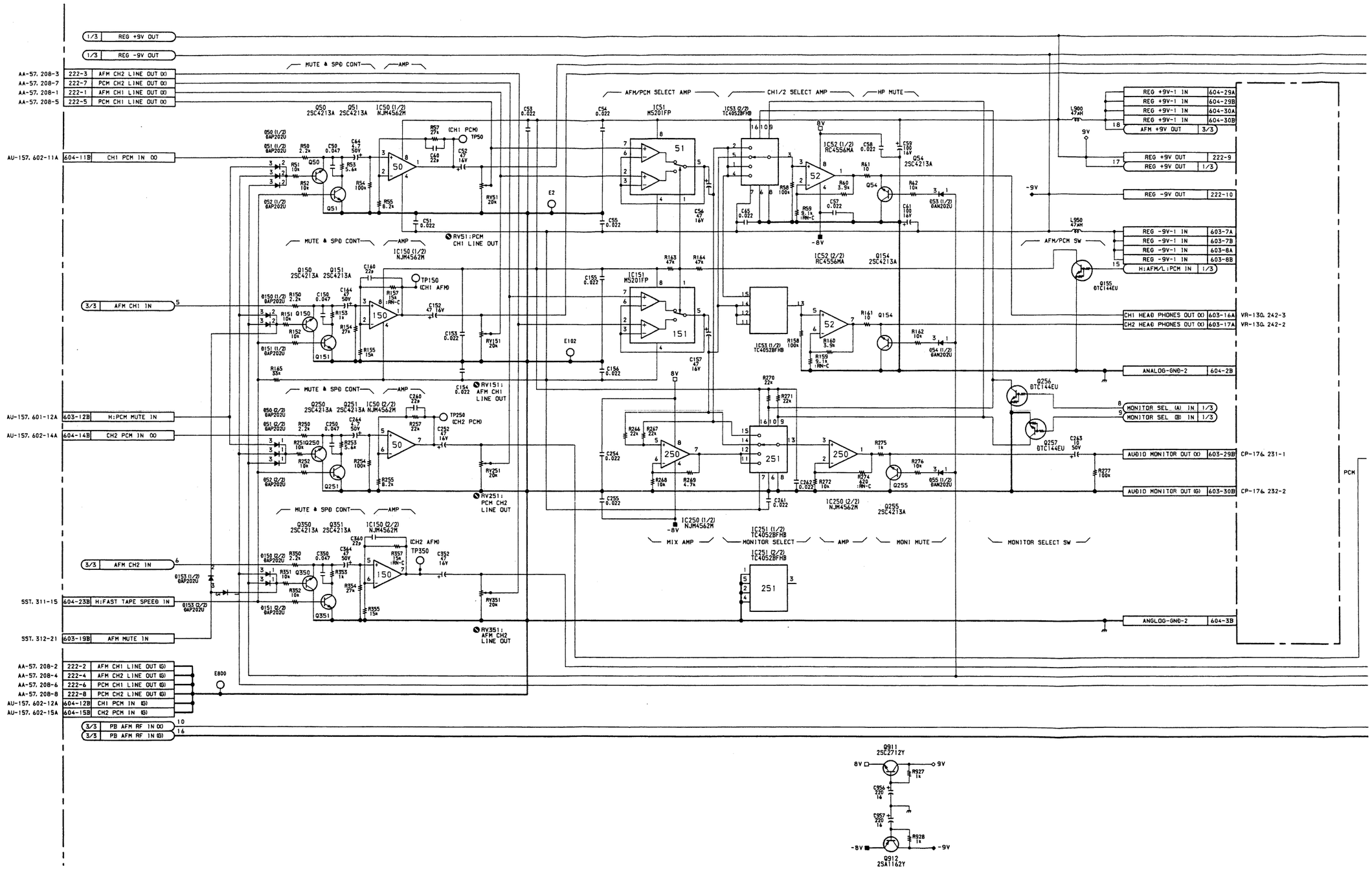
REG +9V OUT
REG -9V OUT
AFM CH2 LINE OUT (X)
PCM CH2 LINE OUT (X)
AFM CH1 LINE OUT (X)
PCM CH1 LINE OUT (X)
CH1 PCM IN (X)
AFM CH1 IN
H:PCM MUTE IN
CH2 PCM IN (X)
AFM CH2 IN
H:FAST TAPE SPEED IN
AFM MUTE IN
AFM CH1 LINE OUT (G)
AFM CH2 LINE OUT (G)
PCM CH1 LINE OUT (G)
PCM CH2 LINE OUT (G)
CH1 PCM IN (G)
CH2 PCM IN (G)
PB AFM RF IN (X)
PB AFM RF IN (G)
MUTE & SPD CONT
AMP
AFM/PCM SELECT AMP
CH1/2 SELECT AMP
HP MUTE
AFM/PCM SW
MIX AMP
MONITOR SELECT
MONI MUTE
MONITOR SELECT SW
REG +9V-1 IN
REG -9V-1 IN
AFM +9V OUT
H:AFM/L:PCM IN
CH1 HEAD PHONES OUT (X)
CH2 HEAD PHONES OUT (X)
ANALOG-GND-2
MONITOR SEL (A) IN
MONITOR SEL (B) IN
AUDIO MONITOR OUT (X)
AUDIO MONITOR OUT (G)
ANGLOG-GND-2
PCM

A B C D E F G H

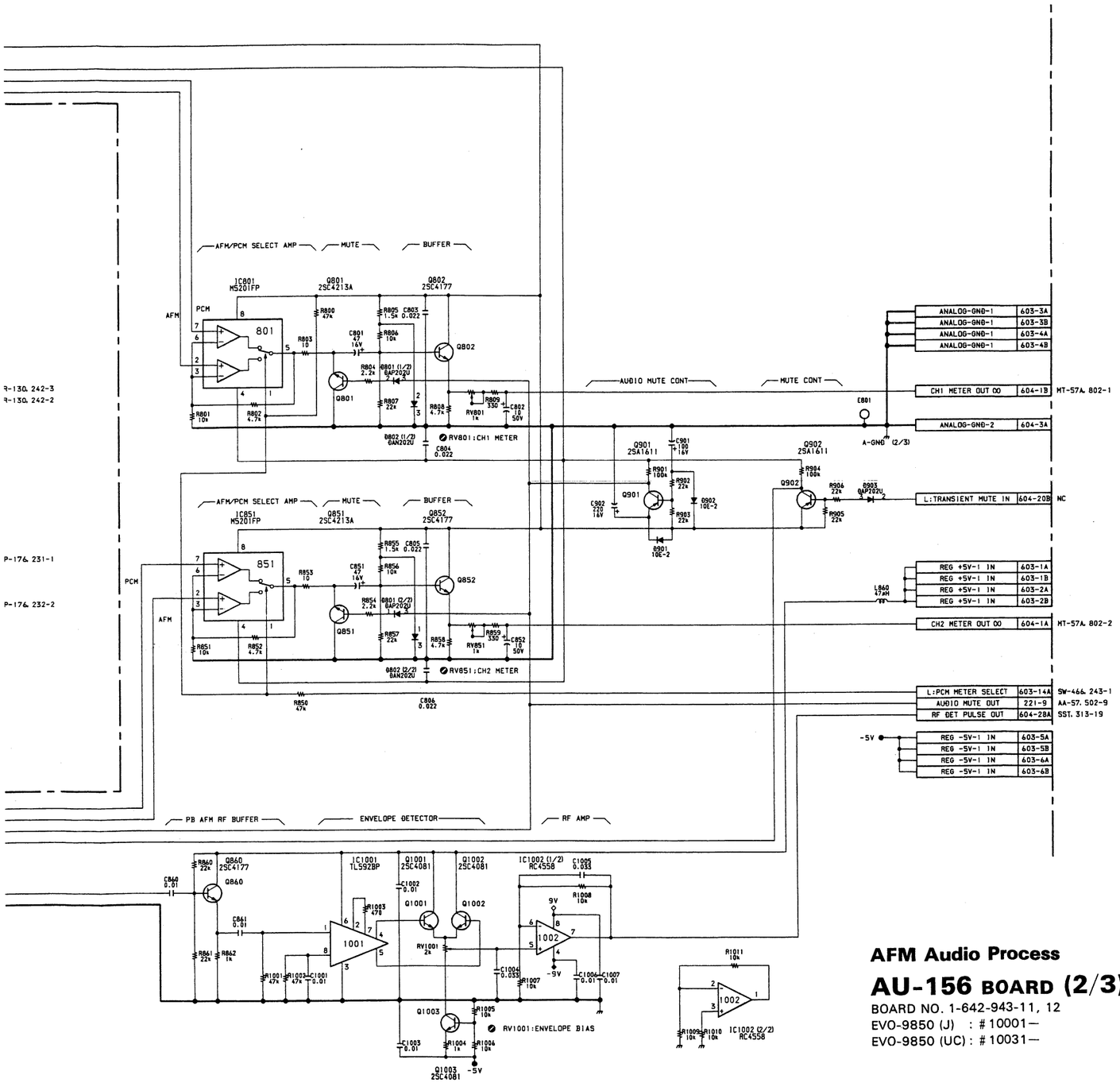

AFM Audio Process

AU-156 BOARD (2/3)

BOARD NO. 1-642-943-11, 12
EVO-9850 (J) : # 10001—
EVO-9850 (UC) : # 10031—

I J K L M N O P

AU-156 (2/3)

AU-156 (2/3)

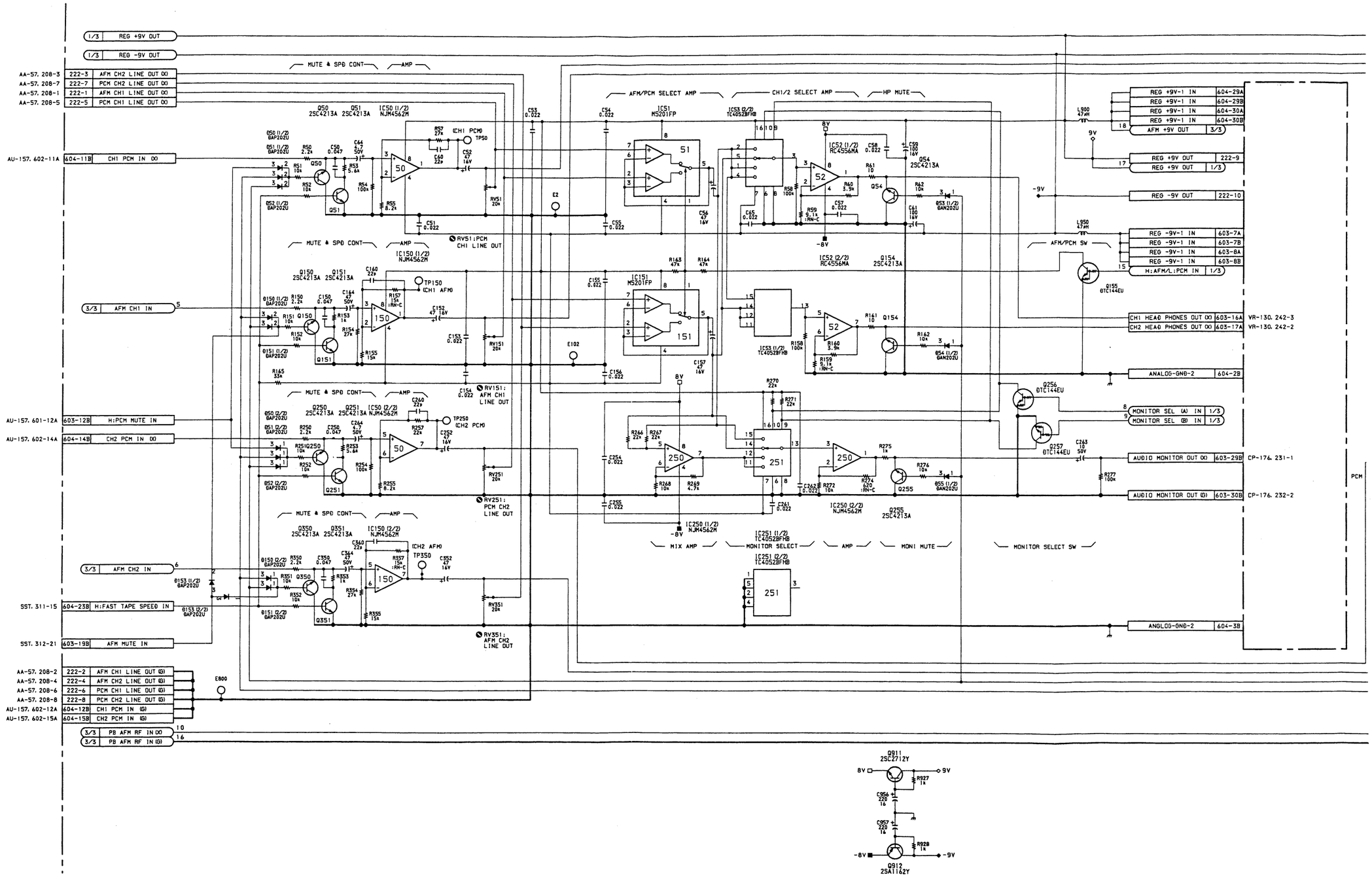

13-33

A | B | C | D | E | F | G | H

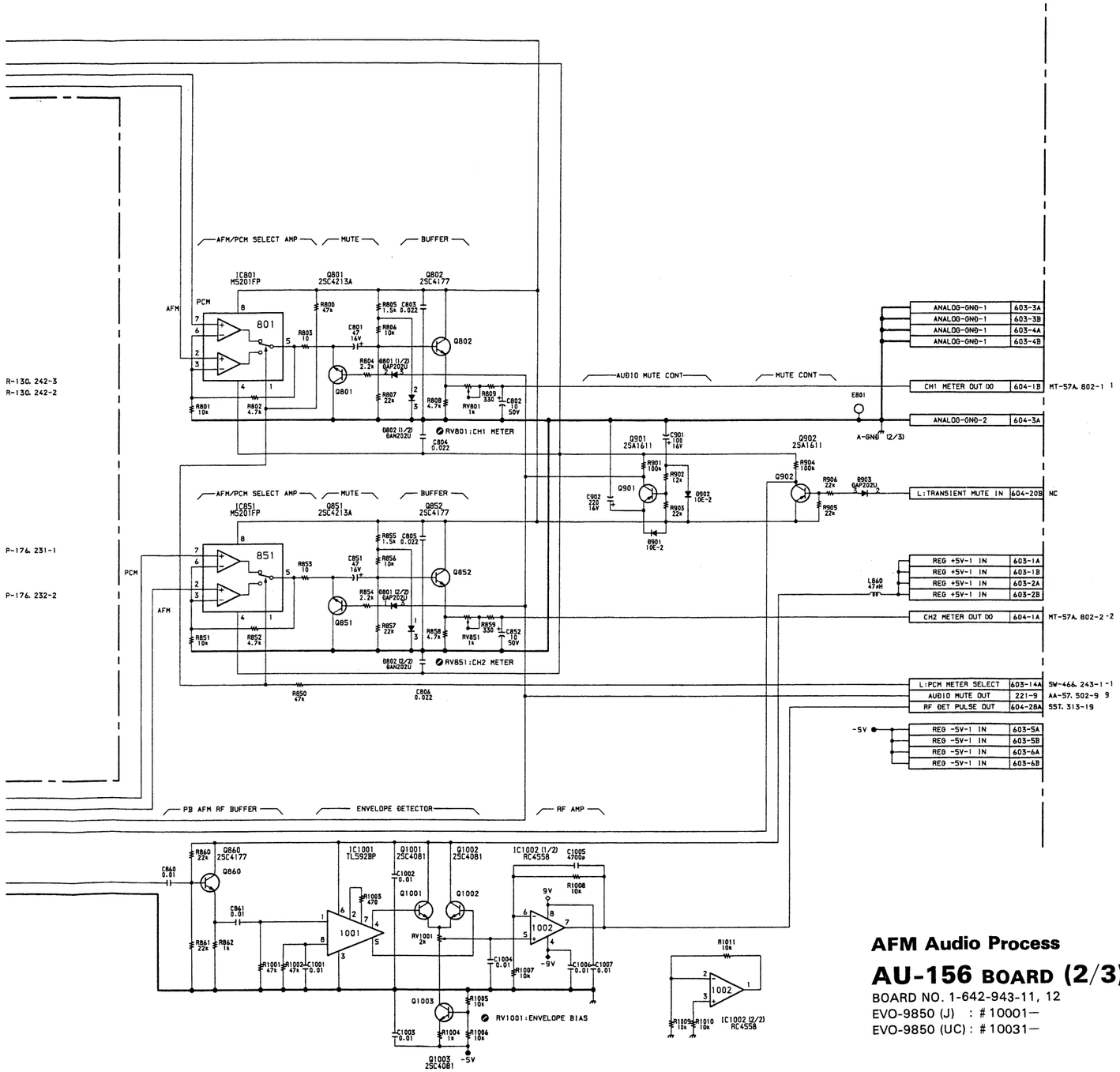

AFM Audio Process

AU-156 BOARD (2/3)

BOARD NO. 1-642-943-11, 12
EVO-9850 (J) : # 10001—
EVO-9850 (UC) : # 10031—

I J K L M N O P

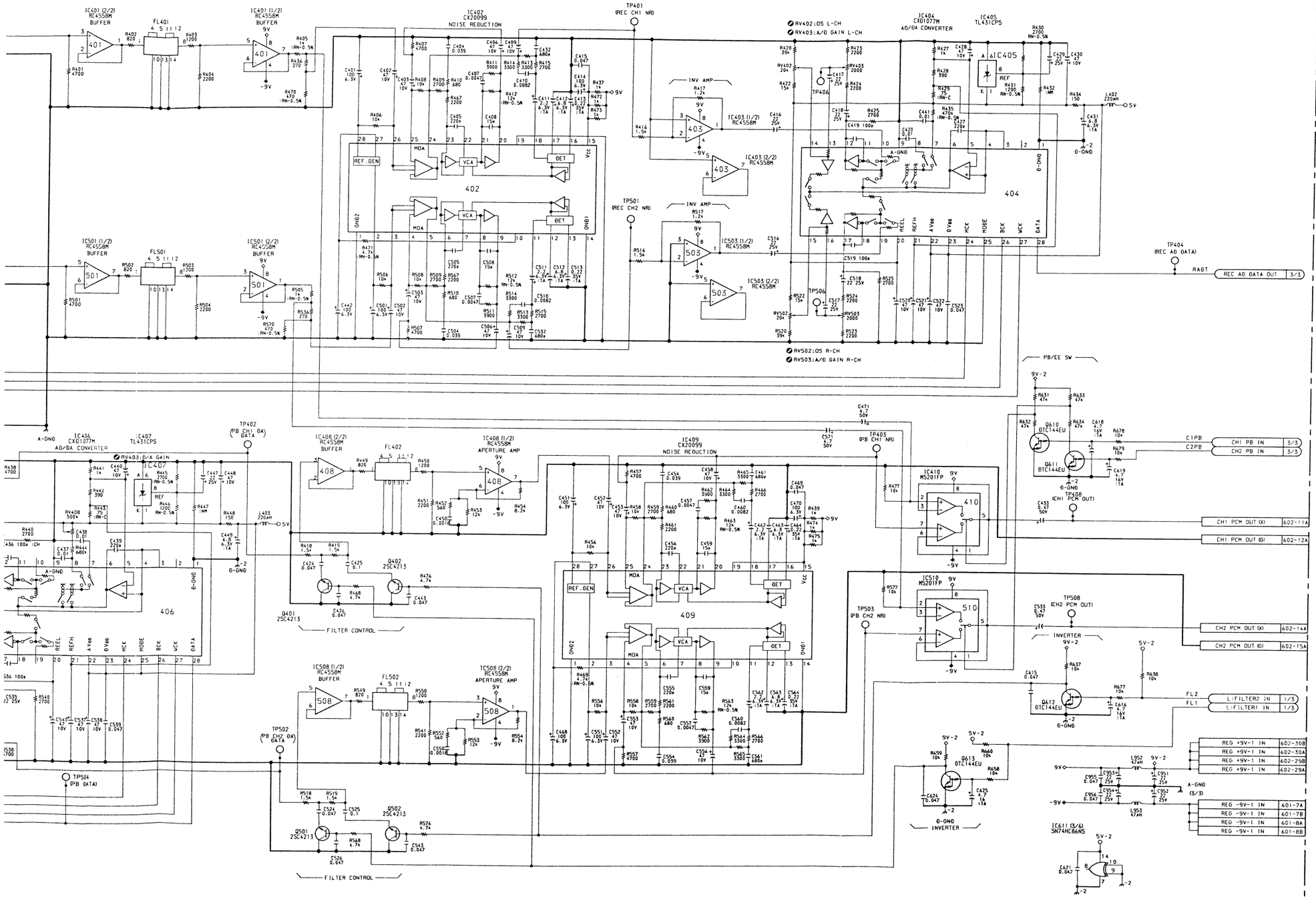

PCM Audio D/A, A/D, NR Process

AU-157 BOARD (2/3)

BOARD NO. 1-642-947-11, 12, 13
EVO-9850 (J) : = 10001–
EVO-9850 (UC) : = 10031–

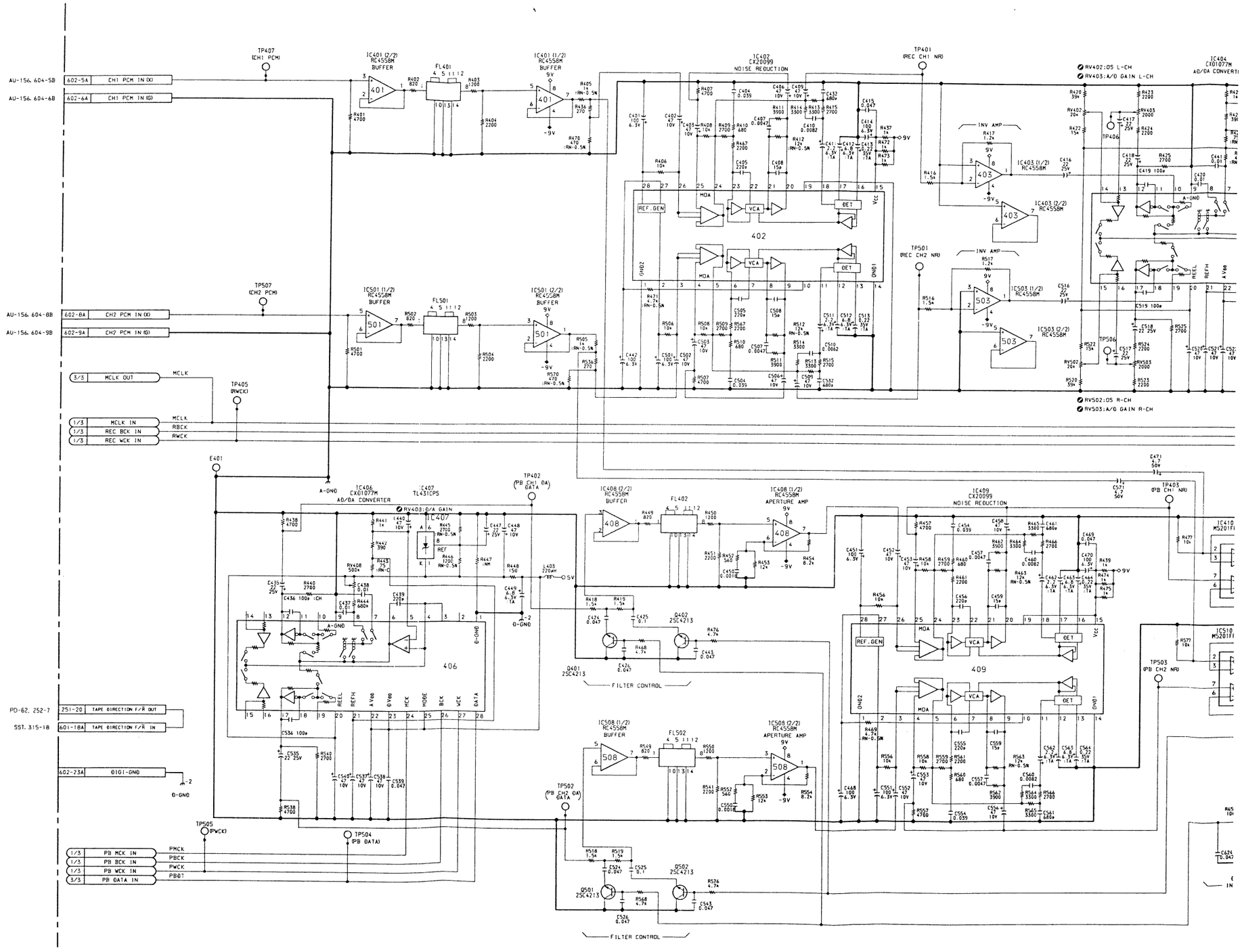
AU-156, 604-5B
AU-156, 604-6B
AU-156, 604-8B
AU-156, 604-9B
PD-62, 252-7
SST, 315-18
CH1 PCM IN (X)
CH1 PCM IN (G)
CH2 PCM IN (X)
CH2 PCM IN (G)
MCLK OUT
MCLK IN
REC BCK IN
REC WCK IN
TAPE DIRECTION F/R OUT
TAPE DIRECTION F/R IN
DIGI-GND
PB MCK IN
PB BCK IN
PB WCK IN
PB DATA IN
TP407 (CH1 PCM)
TP507 (CH2 PCM)
TP405 (RWCK)
TP401 (REC CH1 NR)
TP501 (REC CH2 NR)
TP402 (PB CH1 DATA)
TP502 (PB CH2 DATA)
TP403 (PB CH1 NR)
TP503 (PB CH2 NR)
TP504 (PB DATA)
TP505 (PWCK)
TP406
TP506
IC401 (2/2) RC4558M BUFFER
IC401 (1/2) RC4558M BUFFER
IC402 CX20099 NOISE REDUCTION
IC403 (1/2) RC4558M
IC403 (2/2) RC4558M
IC501 (1/2) RC4558M BUFFER
IC501 (2/2) RC4558M BUFFER
IC503 (1/2) RC4558M
IC503 (2/2) RC4558M
IC406 CXD1077M AD/DA CONVERTER
IC407 TL431CPS
IC408 (2/2) RC4558M BUFFER
IC408 (1/2) RC4558M APERTURE AMP
IC409 CX20099 NOISE REDUCTION
IC508 (1/2) RC4558M BUFFER
IC508 (2/2) RC4558M APERTURE AMP
FL401
FL402
FL501
FL502
402
406
409
INV AMP
FILTER CONTROL
RV402:DS L-CH
RV403:A/D GAIN L-CH
RV502:DS R-CH
RV503:A/D GAIN R-CH
RV403:D/A GAIN

A B C D E F G H

AU-157 (2/3)

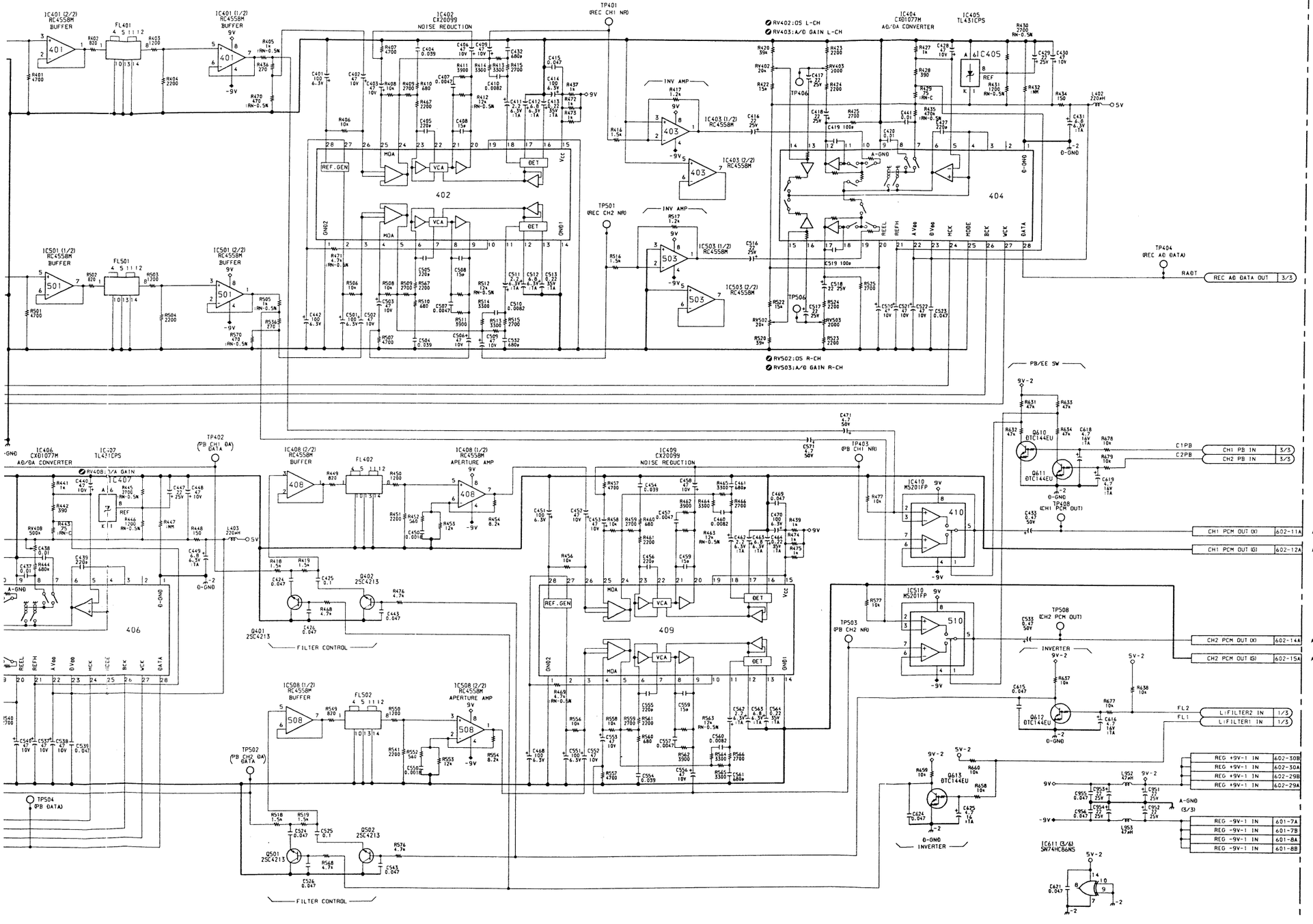

PCM Audio D/A, A/D, NR Process

AU-157 BOARD (2/3)

BOARD NO. 1-642-947-11, 12
EVO-9850 (J) : # 10001–
EVO-9850 (UC) : # 10031–

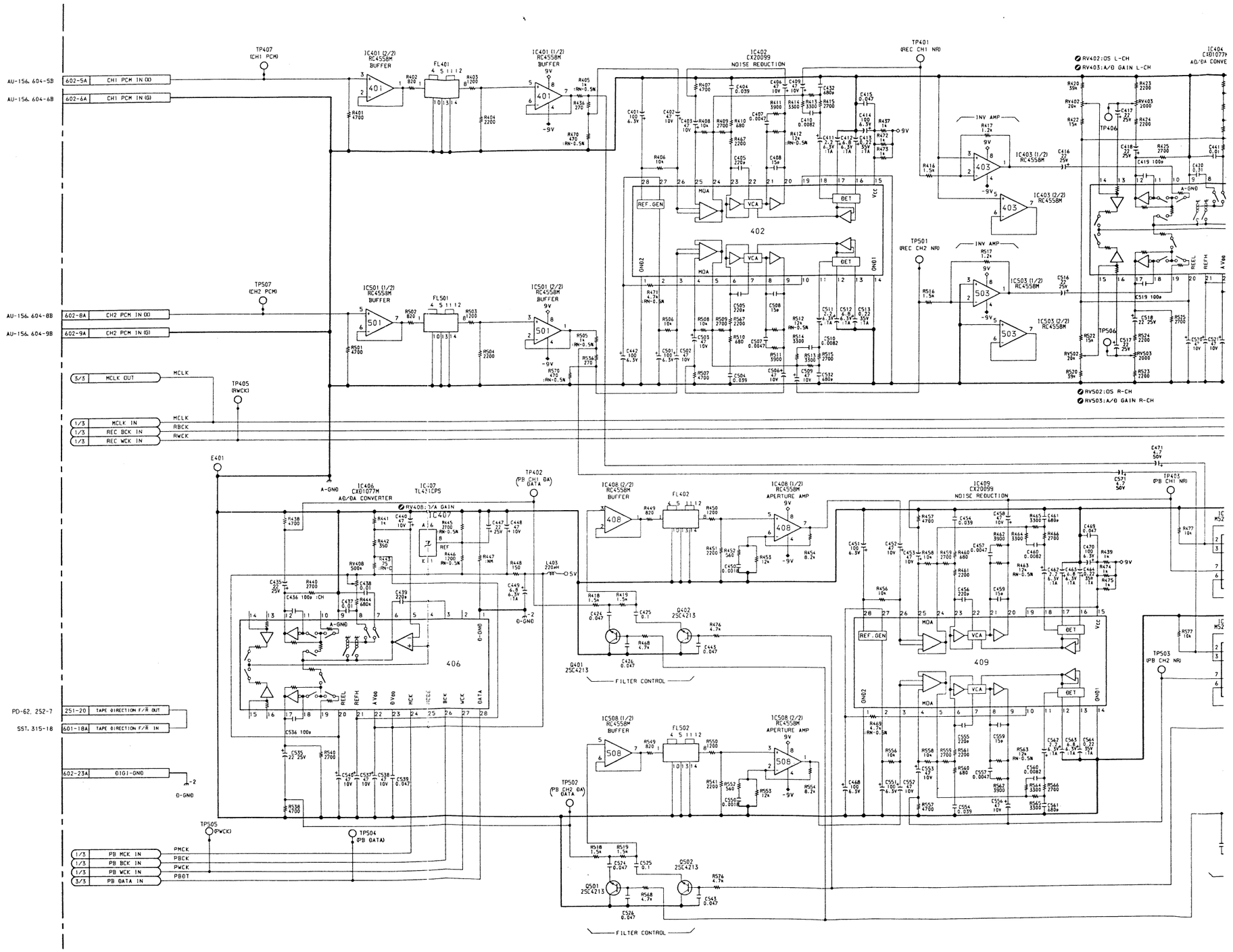
AU-156, 604-5B
602-5A CH1 PCM IN (X)
AU-156, 604-6B
602-6A CH1 PCM IN (G)
TP407 (CH1 PCM)
IC401 (2/2) RC4558M BUFFER
FL401
IC401 (1/2) RC4558M BUFFER
IC402 CX20099 NOISE REDUCTION
TP401 (REC CH1 NR)
RV402:OS L-CH
RV403:A/D GAIN L-CH
IC404 CXD1077M AD/DA CONVE
INV AMP
IC403 (1/2) RC4558M
IC403 (2/2) RC4558M
A-GND
REF.GEN
MDA
VCA
DET
402
AU-156, 604-8B
602-8A CH2 PCM IN (X)
AU-156, 604-9B
602-9A CH2 PCM IN (G)
TP507 (CH2 PCM)
IC501 (1/2) RC4558M BUFFER
FL501
IC501 (2/2) RC4558M BUFFER
TP501 (REC CH2 NR)
IC503 (1/2) RC4558M
IC503 (2/2) RC4558M
RV502:OS R-CH
RV503:A/D GAIN R-CH
3/3 MCLK OUT
MCLK
TP405 (RWCK)
1/3 MCLK IN
1/3 REC BCK IN
1/3 REC WCK IN
RBCK
RWCK
E401
A-GND
IC406 CX01077M AD/DA CONVERTER
IC407 TL431CPS
TP402 (PB CH1 DATA)
RV408:V/A GAIN
IC408 (2/2) RC4558M BUFFER
FL402
IC408 (1/2) RC4558M APERTURE AMP
IC409 CX20099 NOISE REDUCTION
TP403 (PB CH1 NR)
406
409
FILTER CONTROL
Q401 2SC4213
Q402 2SC4213
PD-62, 252-7
SST. 315-18
251-20 TAPE DIRECTION F/R OUT
601-18A TAPE DIRECTION F/R IN
602-23A 0101-GND
D-GND
TP505 (PWCK)
TP504 (PB DATA)
1/3 PB MCK IN
1/3 PB BCK IN
1/3 PB WCK IN
3/3 PB DATA IN
PMCK
PBCK
PWCK
PBDT
IC508 (1/2) RC4558M BUFFER
FL502
IC508 (2/2) RC4558M APERTURE AMP
TP502 (PB CH2 DATA)
TP503 (PB CH2 NR)
Q501 2SC4213
Q502 2SC4213

A B C D E F G H

AU-157 (1/3)

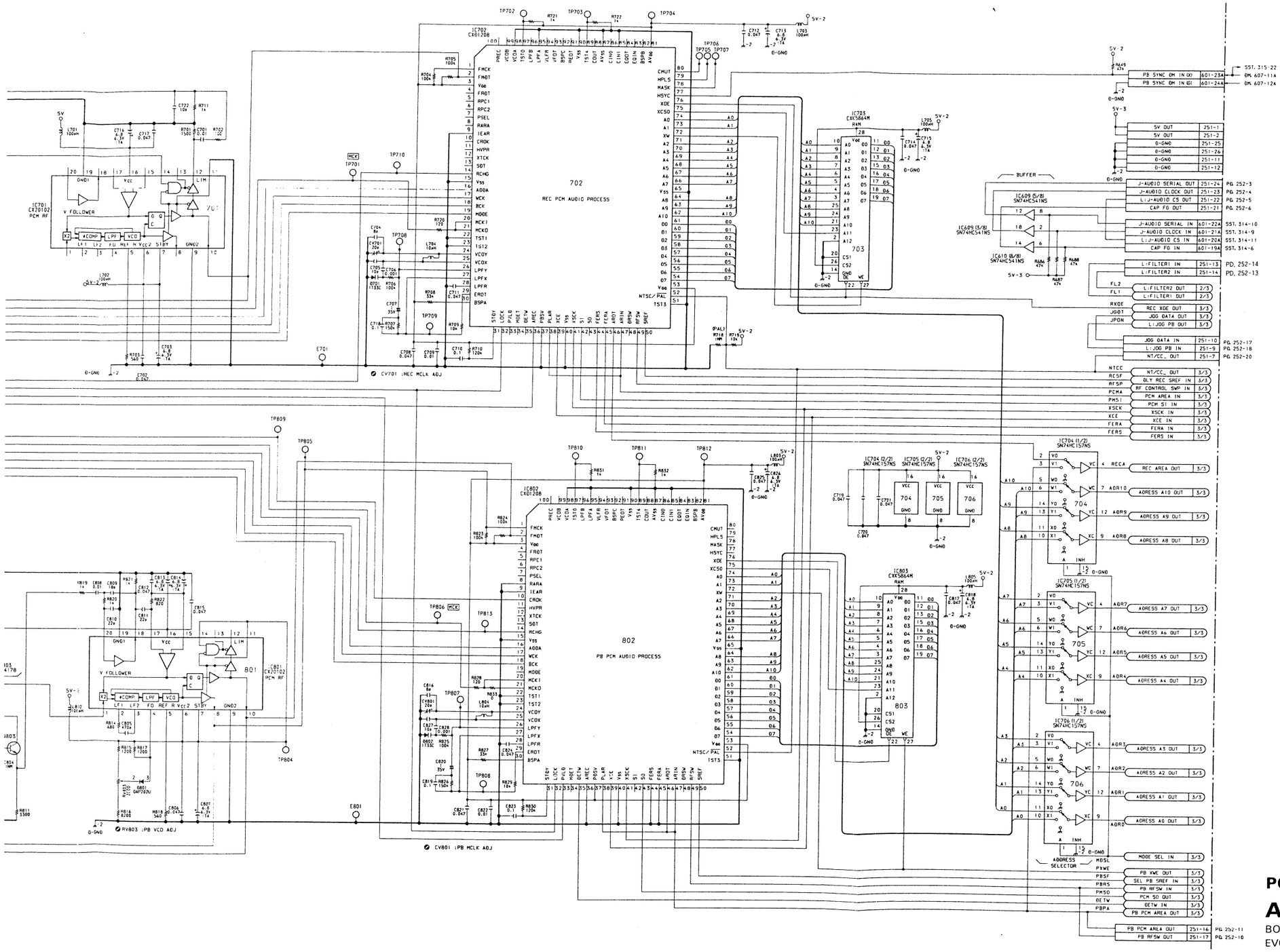

PCM Audio REC/PB Process

AU-157 BOARD (1/3)

BOARD NO. 1-642-947-13
EVO-9850 (J) : # 10121—
EVO-9850 (UC) : # 10341—

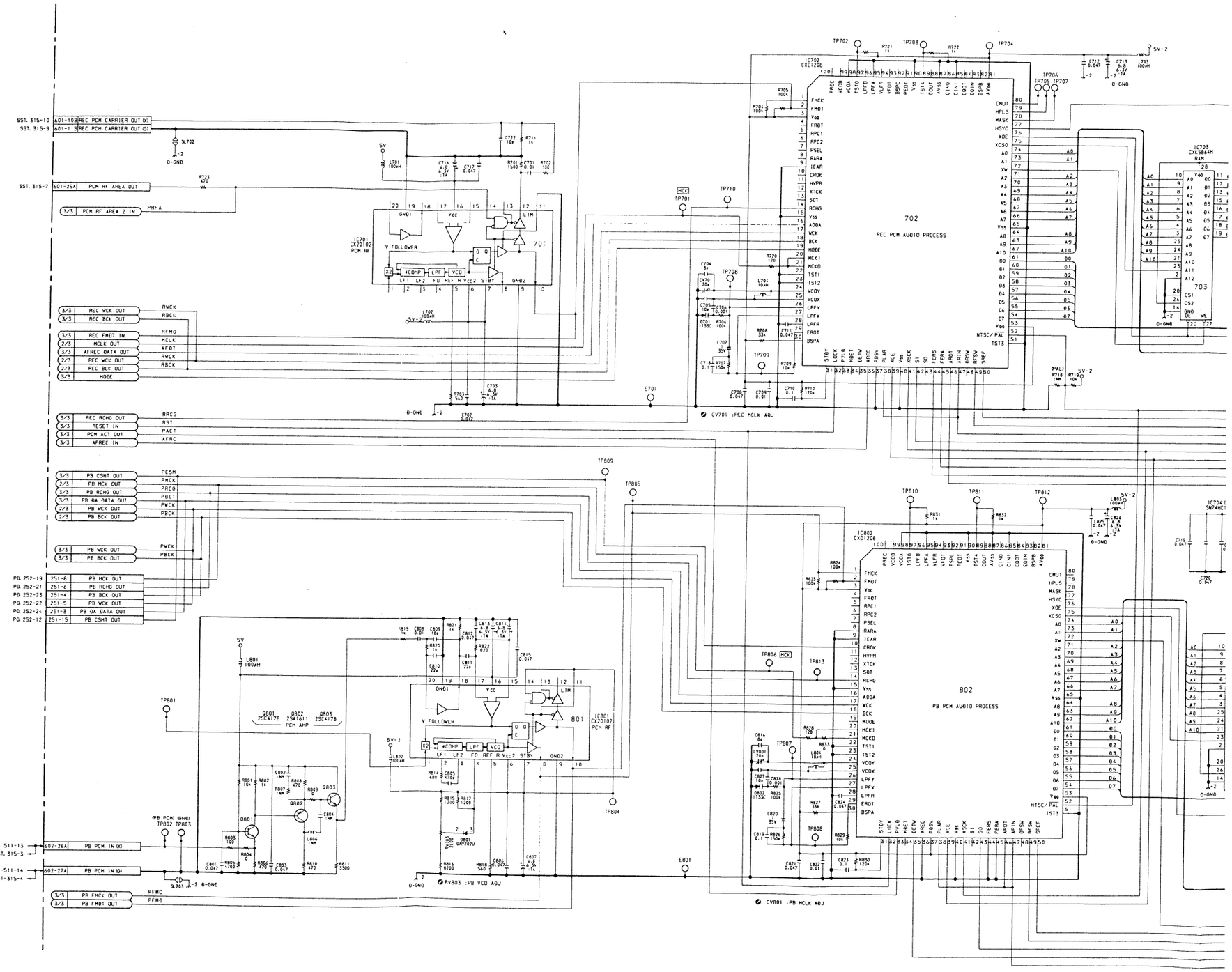

13-37(b) 13-37(b)

A B C D E F G H

AU-157 (1/3)

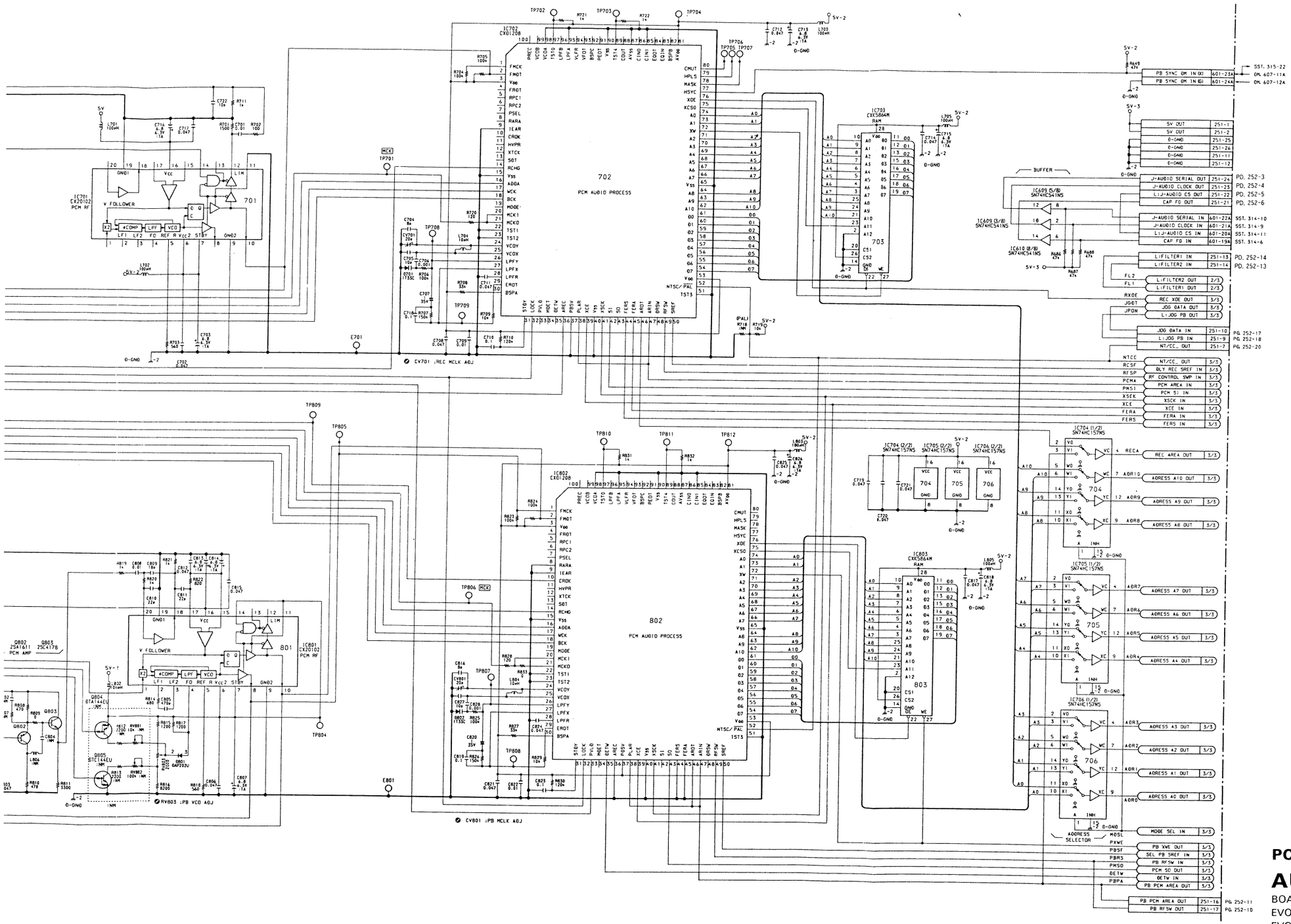

PCM Audio REC/PB Process

AU-157 BOARD (1/3)

BOARD NO. 1-642-947-11, 12
EVO-9850 (J) : # 10001—10120
EVO-9850 (UC) : # 10031—10340

AU-157 (1/3)

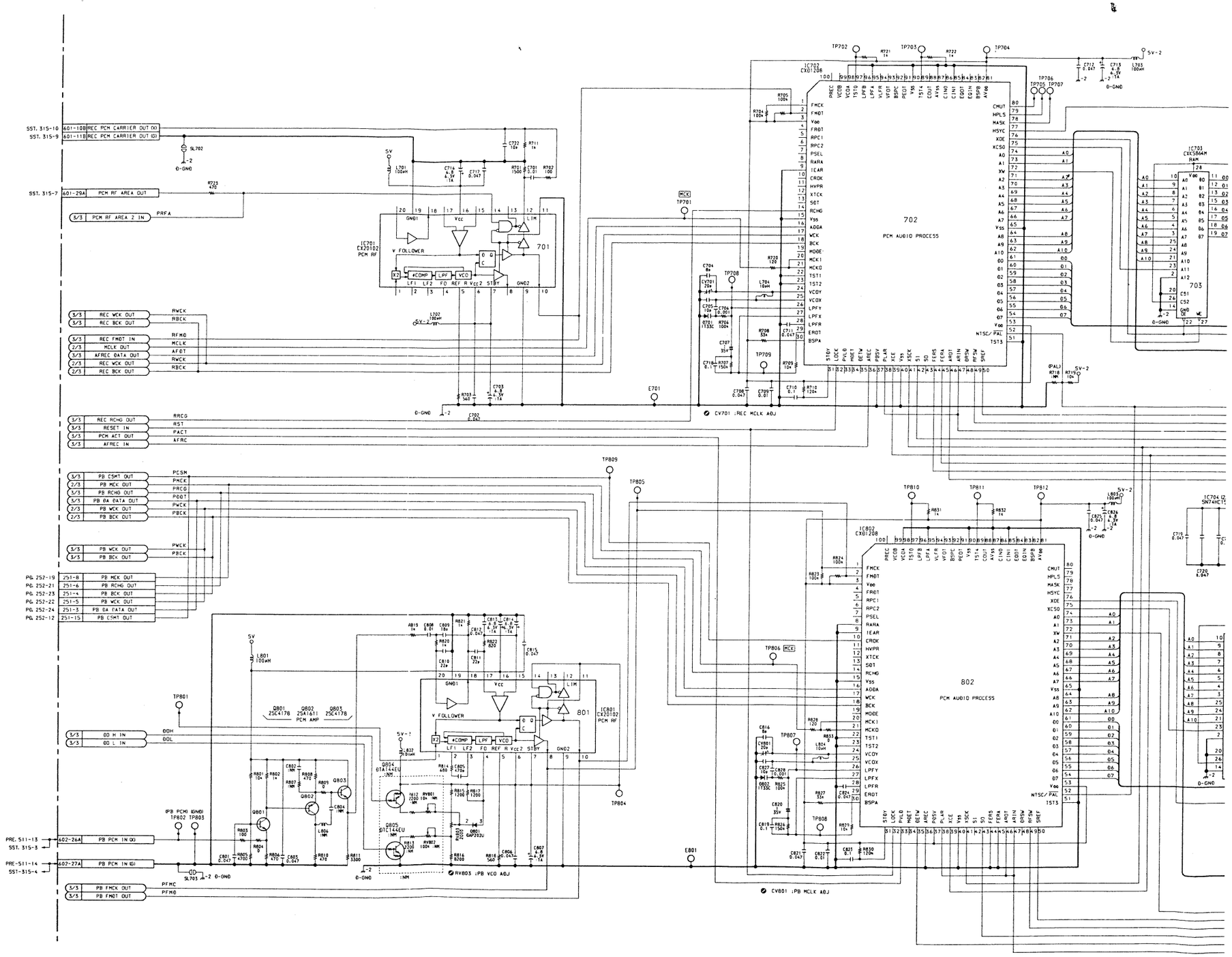

13-37(a)

A | B | C | D | E | F | G | H

AU-157 (1/3)

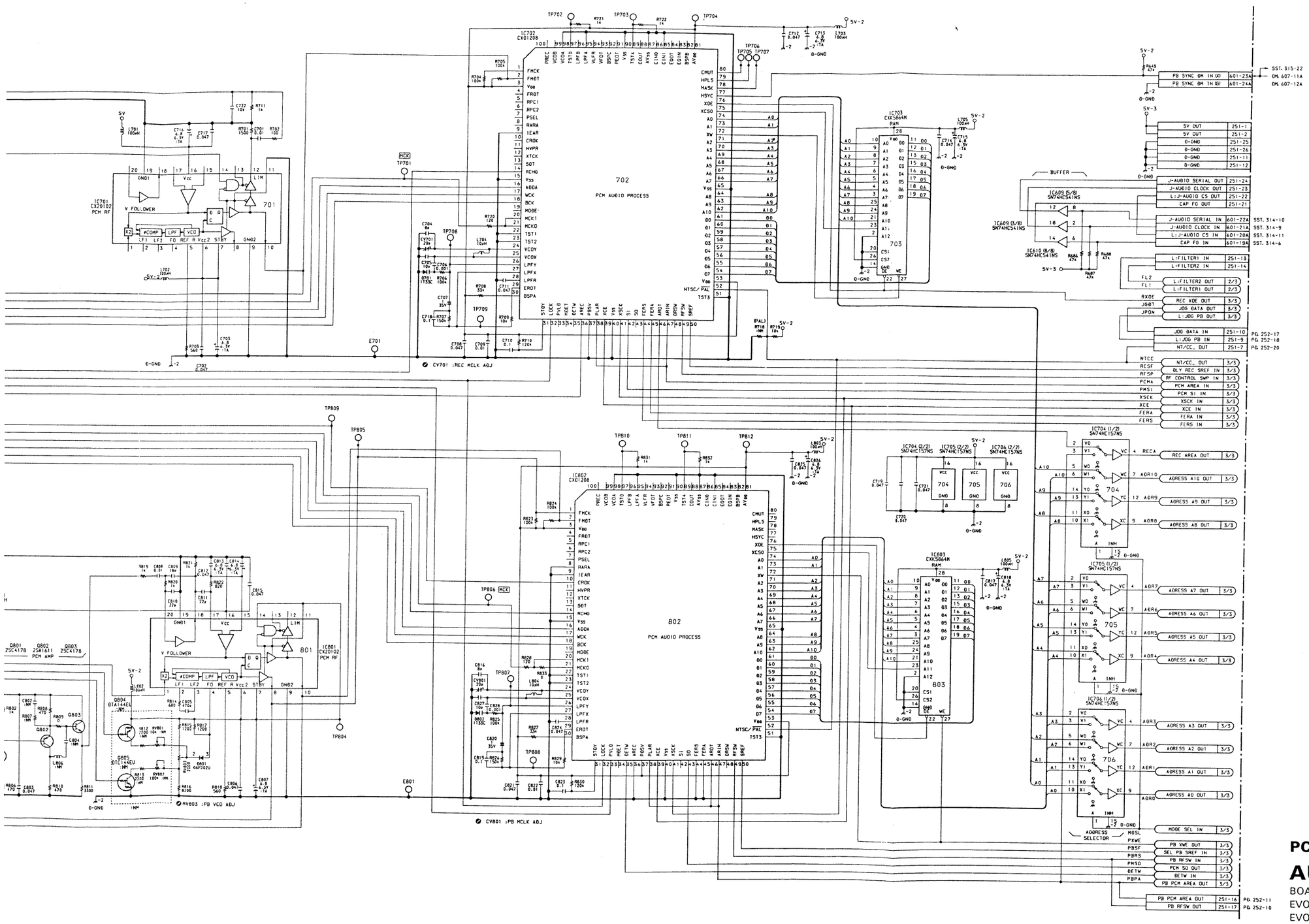

PCM Audio REC/PB Process

AU-157 BOARD (1/3)

BOARD NO. 1-642-947-11, 12
EVO-9850 (J) : # 10001–
EVO-9850 (UC) : # 10031–

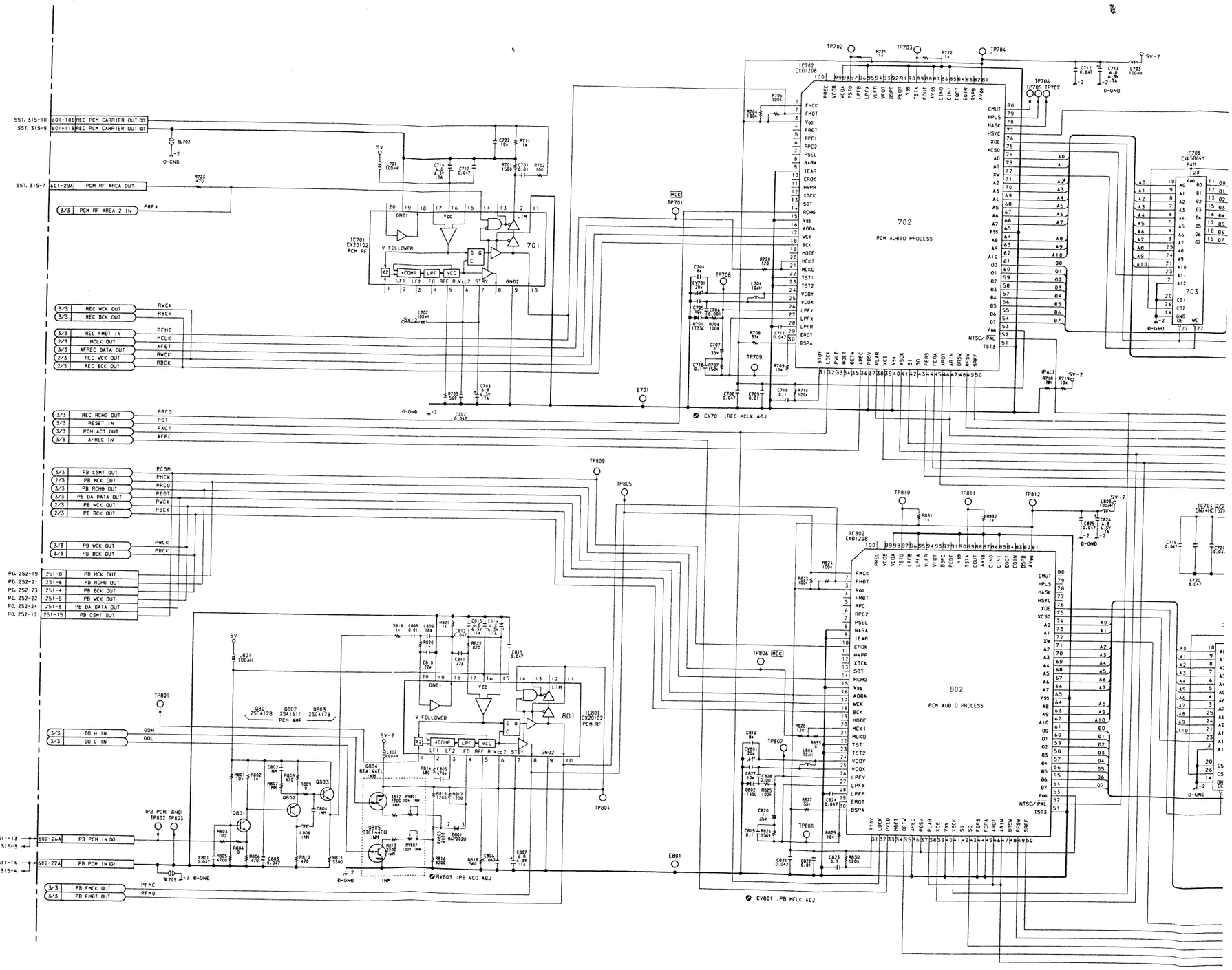
702
PCM AUDIO PROCESS
802
PCM AUDIO PROCESS
701
801
703
IC701
CX20102
PCM RF
IC702
CX01208
IC802
CX01208
IC703
CXK5864M
IC801
CX20102
PCM RF
CV701 :REC MCLK ADJ
CV801 :PB MCLK ADJ
RV803 :PB VCO ADJ
V FOLLOWER
PCM AMP
REC PCM CARRIER OUT (0)
PCM RF AREA OUT
PCM RF AREA 2 IN
REC WCK OUT
REC BCK OUT
REC FMDT IN
MCLK OUT
AFREC DATA OUT
REC RCHG OUT
RESET IN
PCM ACT OUT
AFREC IN
PB CSMT OUT
PB MCK OUT
PB RCHG OUT
PB DA DATA OUT
PB WCK OUT
PB BCK OUT
PB DA DATA OUT
PB CSMT OUT
DD H IN
DD L IN
PB PCM IN (0)
PB FMCK OUT
PB FMDT OUT
SST. 315-10
SST. 315-9
SST. 315-7
PRE. 511-13
SST. 315-3
PRE-511-14
SST-315-4

A B C D E F G H

)

Q605	B-5
Q606	B-5 *
Q607	B-4 *
Q608	B-4 *
Q609	B-3 *
Q610	J-6
Q611	H-5
Q612	H-2
Q613	H-2 *
Q801	G-5
Q802	G-5 *
Q803	G-4 *
RV402	L-3
RV403	L-1
RV408	K-1
RV502	N-3
RV503	M-1
RV803	F-4
P401	L-4
P402	K-2
P403	K-5
P404	M-1
P405	M-1
P406	L-2
P407	L-6
P408	K-6
P501	M-4
P502	H-2
P503	J-5
P504	H-1
P505	H-1
P506	N-2
P507	M-6
P508	J-5
P601	C-5
P602	B-3
P603	B-4
P604	B-5
P605	B-1
P701	G-2
702	D-4
703	E-4
704	E-4
705	E-4
706	E-4
707	E-4
708	F-2
709	F-2
801	F-4
802	H-5
803	G-5
304	F-6
305	F-4
306	H-2
307	H-4
308	H-4
309	F-3
310	F-4
311	F-4
312	G-3
11	C-3

ark ; B SIDE mount.

AU-157 BOARD
A Side

Serial No.: (J) 10031—10120
Serial No.: (UC) 10071—10340

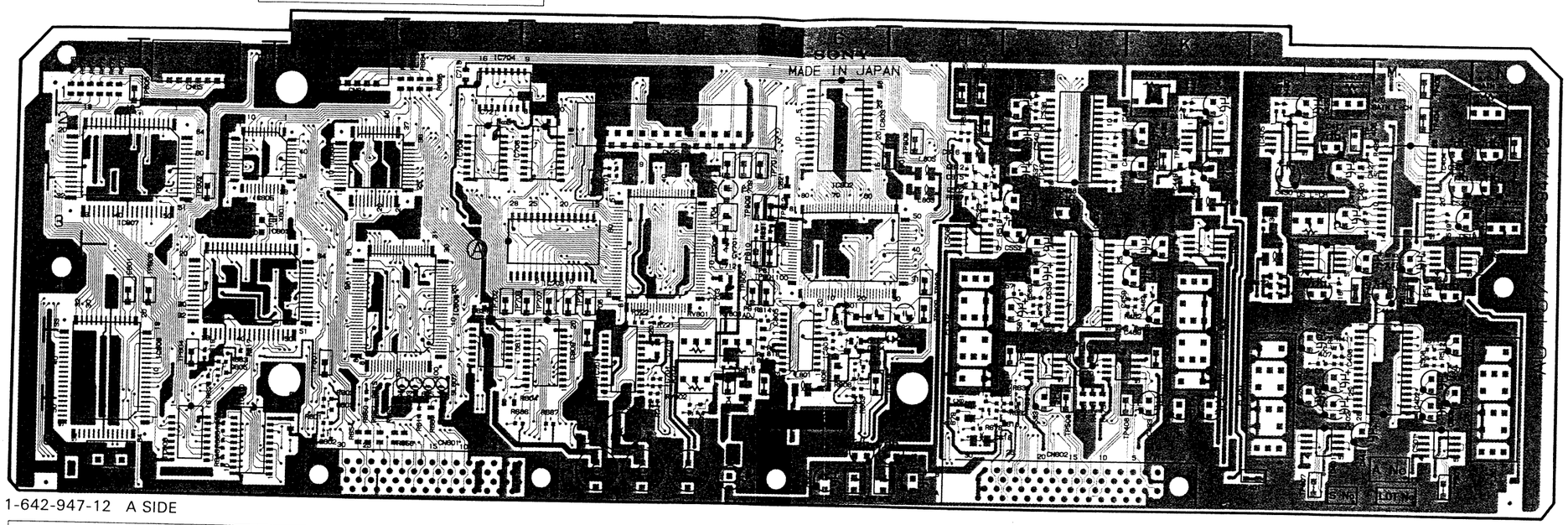

1-642-947-12 A SIDE

A Side is the same as Component Side

AU-157 BOARD
B Side

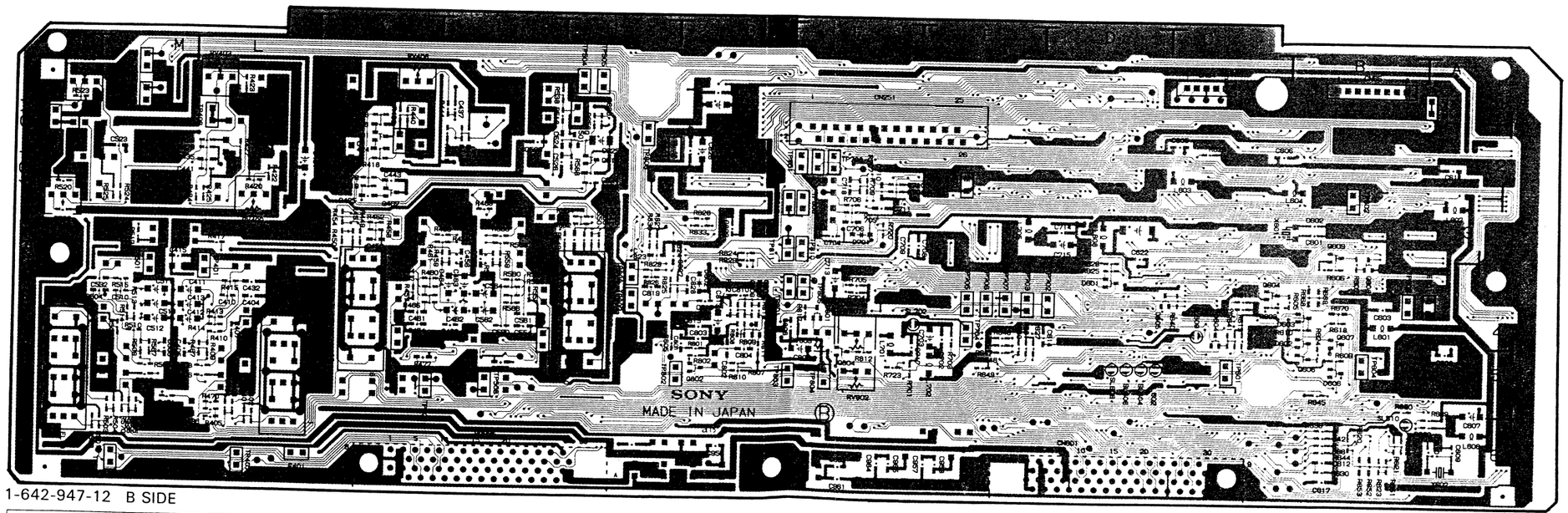

1-642-947-12 B SIDE

B Side is the same as Soldering Side

AU-157 (1-642-947-12)

CN64	C-1	Q605	B-5
CN65	B-1	Q606	B-5 *
CN251	F-2	Q607	B-4 *
CN601	D-6	Q608	B-4 *
CN602	J-6	Q609	B-3 *
		Q610	J-6
CV701	F-3	Q611	H-5
CV801	G-4	Q612	H-2
		Q613	H-2 *
D601	D-4 *	Q801	G-5
D602	C-4 *	Q802	G-5 *
D603	C-4 *	Q803	G-4 *
D604	C-4 *		
D605	D-4 *	RV402	L-3
D606	B-5 *	RV403	L-1
D701	F-3 *	RV408	K-1
D801	F-4 *	RV502	N-3
D802	G-4 *	RV503	M-1
		RV803	F-4
E401	L-6		
E601	A-4	TP401	L-4
E701	E-3	TP402	K-2
E801	H-2	TP403	K-5
		TP404	M-1
FL401	L-5	TP405	M-1
FL402	K-4	TP406	L-2
FL501	N-6	TP407	L-6
FL502	H-4	TP408	K-6
		TP501	M-4
IC401	L-6	TP502	H-2
IC402	M-5	TP503	J-5
IC403	L-4	TP504	H-1
IC404	M-2	TP505	H-1
IC405	L-2	TP506	N-2
IC406	J-2	TP507	M-6
IC407	K-2	TP508	J-5
IC408	K-3	TP601	C-5
IC409	J-3	TP602	B-3
IC410	J-5	TP603	B-4
IC501	M-6	TP604	B-5
IC503	N-4	TP605	B-1
IC508	H-3	TP701	G-2
IC510	J-5	TP702	D-4
IC601	B-3	TP703	E-4
IC603	B-6	TP704	E-4
IC604	C-2	TP705	E-4
IC605	B-3	TP706	E-4
IC607	A-3	TP707	E-4
IC608	D-4	TP708	F-2
IC609	E-5	TP709	F-2
IC610	E-6	TP801	F-4
IC611	E-5	TP802	H-5
IC701	E-5	TP803	G-5
IC702	F-3	TP804	F-6
IC703	E-4	TP805	F-4
IC704	D-1	TP806	H-2
IC705	D-2	TP807	H-4
IC706	E-2	TP808	H-4
IC801	G-5	TP809	F-3
IC802	G-2	TP810	F-4
IC803	G-2	TP811	F-4
		TP812	G-3
Q401	K-2 *		
Q402	K-3 *	X601	C-3
Q501	H-2 *		
Q502	H-2	* mark; B SIDE mount.	
Q602	C-6		
Q603	C-6		
Q604	C-4 *		

AU-157 BOARD
A Side

Serial No.: (J) 10031—10120
Serial No.: (UC) 10071—10340

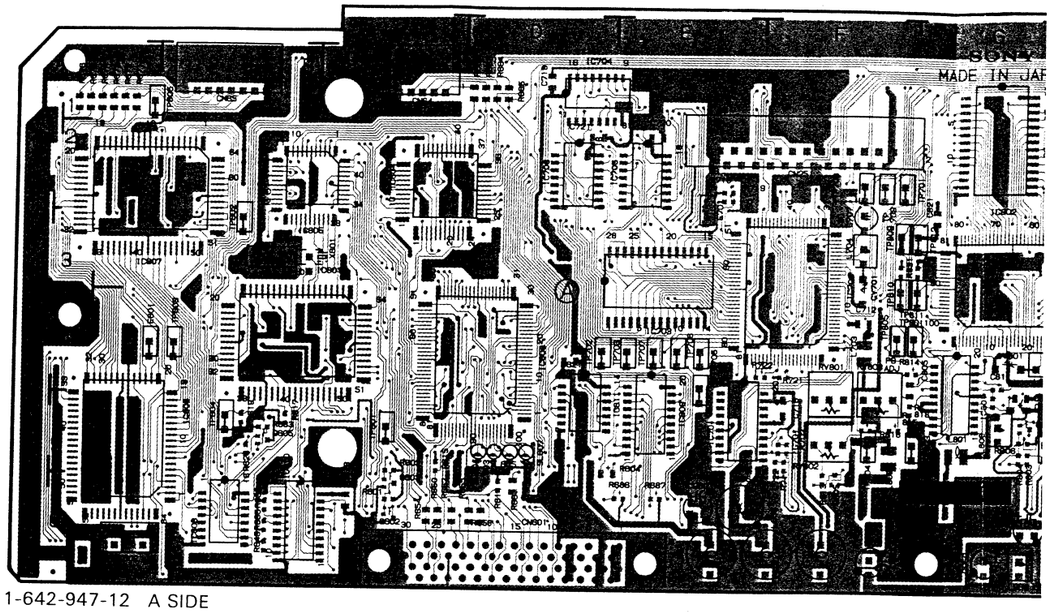

1-642-947-12 A SIDE

A Side is the same as Component Side

AU-157 BOARD
B Side

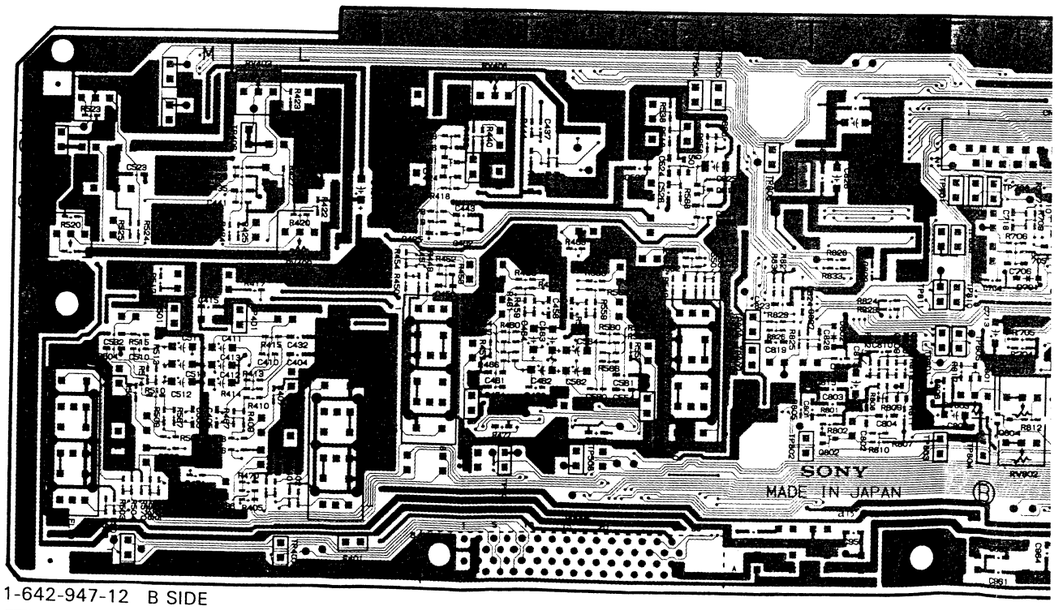

1-642-947-12 B SIDE

B Side is the same as Soldering Side

AU-157 BOARD
A Side

Serial No.: (J) 10001—10030
Serial No.: (UC) 10031—10070

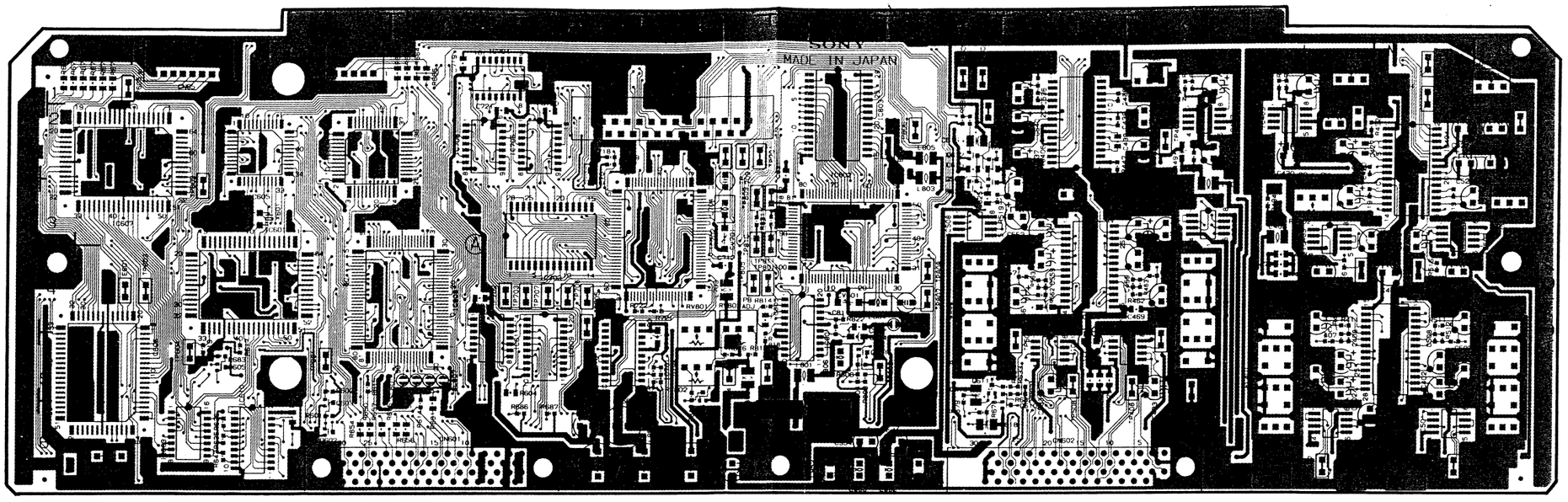

1-642-947-11 A SIDE

A Side is the same as Component Side

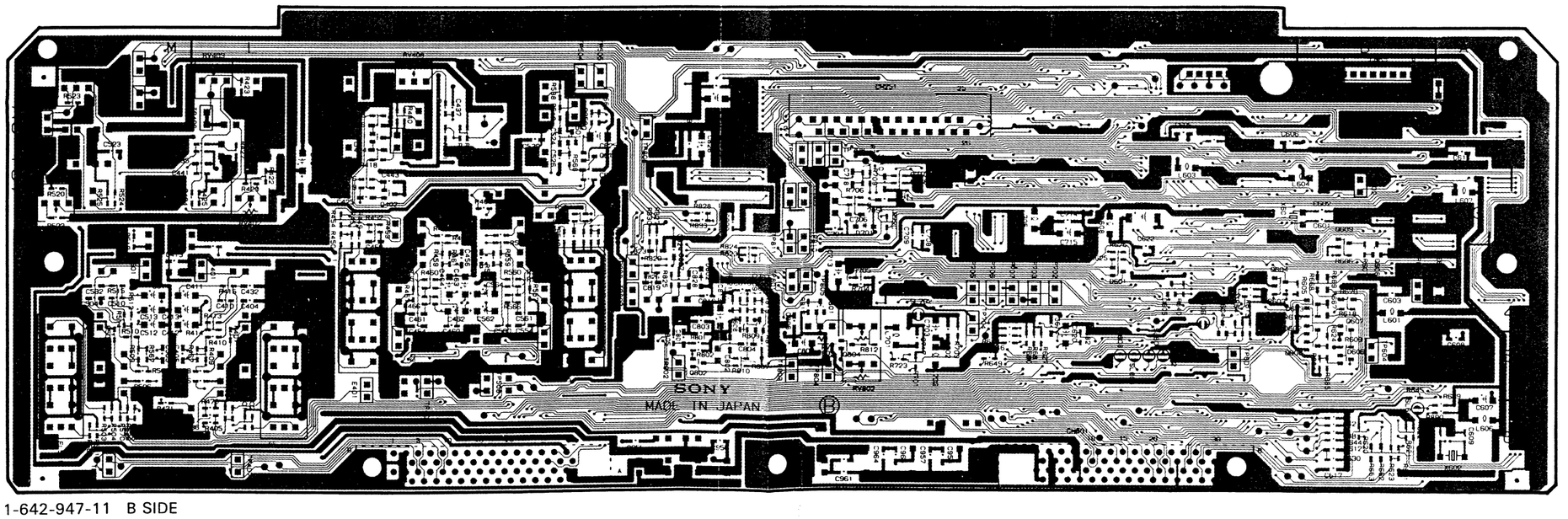

1-642-947-11 B SIDE

B Side is the same as Soldering Side

12-947-11)

·1	Q605	B-5
·1	Q606	B-5 *
2	Q607	B-4 *
·6	Q608	B-4 *
6	Q609	B-3 *
	Q610	J-6
3	Q611	H-5
·4	Q612	H-2
	Q613	H-2 *
·4 *	Q801	G-5
·4 *	Q802	G-5 *
·4 *	Q803	G-4 *
·4 *		
·4 *	RV402	L-3
·5 *	RV403	L-1
3 *	RV408	K-1
4 *	RV502	N-3
4 *	RV503	N-1
	RV803	F-4
5		
4	TP401	L-4
2	TP402	K-2
·2	TP403	K-5
	TP404	M-1
5	TP405	M-1
4	TP406	L-2
·5	TP407	L-6
·4	TP408	K-5
	TP501	M-4
6	TP502	H-2
·5	TP503	J-5
3	TP504	H-1
·2	TP505	H-1
2	TP506	N-2
2	TP507	M-6
2	TP508	J-5
3	TP601	C-5
3	TP602	B-3
5	TP603	B-4
·6	TP604	B-5
·3	TP605	A-1
3	TP701	F-2
5	TP702	D-4
4	TP703	E-4
6	TP704	E-4
2	TP705	E-4
2	TP706	E-4
2	TP707	E-4
4	TP708	F-2
4	TP709	F-2
6	TP801	G-4
4	TP802	G-5
4	TP803	G-5
3	TP804	F-5
4	TP805	F-4
1	TP806	H-2
2	TP807	H-4
2	TP808	H-4
4	TP809	F-3
3	TP810	F-3
1	TP811	G-3
	TP812	G-3
2 *		
3 *	X601	B-3
2 *	X602	A-6
3		
6	* mark ; B SIDE mount.	
6		
4 *		

AU-157 (1-642-947-11)

CN64	C-1	Q605	B-5
CN65	B-1	Q606	B-5 *
CN251	F-2	Q607	B-4 *
CN601	D-6	Q608	B-4 *
CN602	J-6	Q609	B-3 *
		Q610	J-6
CV701	F-3	Q611	H-5
CV801	G-4	Q612	H-2
		Q613	H-2 *
D601	D-4 *	Q801	G-5
D602	B-4 *	Q802	G-5 *
D603	B-4 *	Q803	G-4 *
D604	C-4 *		
D605	D-4 *	RV402	L-3
D606	B-5 *	RV403	L-1
D701	F-3 *	RV408	K-1
D801	F-4 *	RV502	N-3
D802	G-4 *	RV503	N-1
		RV803	F-4
E401	K-5		
E601	A-4	TP401	L-4
E701	E-2	TP402	K-2
E801	H-2	TP403	K-5
		TP404	M-1
FL401	L-5	TP405	M-1
FL402	K-4	TP406	L-2
FL501	N-5	TP407	L-6
FL502	H-4	TP408	K-5
		TP501	M-4
IC401	L-6	TP502	H-2
IC402	M-5	TP503	J-5
IC403	L-3	TP504	H-1
IC404	M-2	TP505	H-1
IC405	L-2	TP506	N-2
IC406	J-2	TP507	M-6
IC407	K-2	TP508	J-5
IC408	K-3	TP601	C-5
IC409	J-3	TP602	B-3
IC410	J-5	TP603	B-4
IC501	M-6	TP604	B-5
IC503	M-3	TP605	A-1
IC508	H-3	TP701	F-2
IC510	J-5	TP702	D-4
IC601	B-4	TP703	E-4
IC603	B-6	TP704	E-4
IC604	C-2	TP705	E-4
IC605	B-2	TP706	E-4
IC607	A-2	TP707	E-4
IC608	D-4	TP708	F-2
IC609	E-4	TP709	F-2
IC610	E-6	TP801	G-4
IC611	D-4	TP802	G-5
IC701	E-4	TP803	G-5
IC702	F-3	TP804	F-5
IC703	D-4	TP805	F-4
IC704	D-1	TP806	H-2
IC705	E-2	TP807	H-4
IC706	E-2	TP808	H-4
IC801	G-4	TP809	F-3
IC802	G-3	TP810	F-3
IC803	G-1	TP811	G-3
		TP812	G-3
Q401	K-2 *		
Q402	K-3 *	X601	B-3
Q501	H-2 *	X602	A-6
Q502	H-3		
Q602	C-6	* mark; B SIDE mount.	
Q603	C-6		
Q604	C-4 *		

AU-157 BOARD

Serial No.: (J) 10001—10030
Serial No.: (UC) 10031—10070

A Side

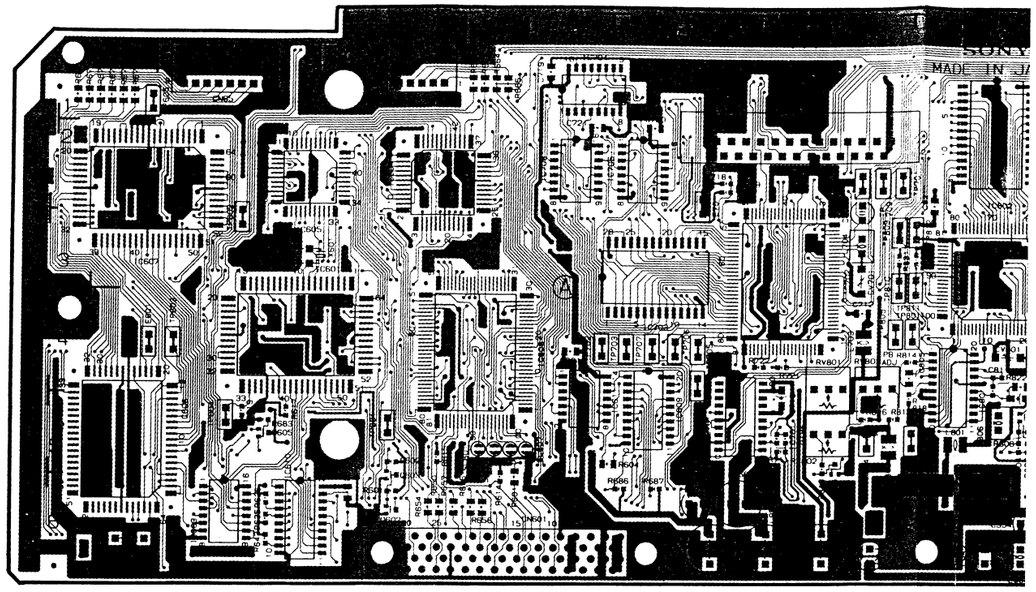

1-642-947-11 A SIDE

A Side is the same as Component Side

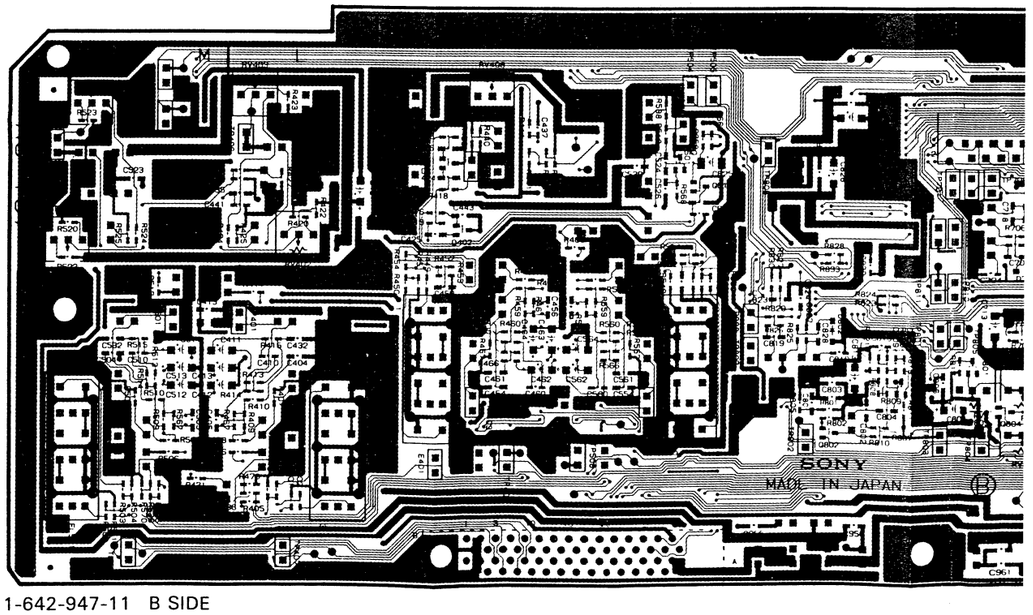

1-642-947-11 B SIDE

B Side is the same as Soldering Side

47-11)

Q605	B-5
Q606	B-5 *
Q607	B-4 *
Q608	B-4 *
Q609	B-3 *
Q610	J-6
Q611	H-5
Q612	H-2
Q613	H-2 *
Q801	G-5
Q802	G-5 *
Q803	G-4 *
RV402	L-3
RV403	L-1
RV408	K-1
RV502	N-3
RV503	N-1
RV803	F-4
TP401	L-4
TP402	K-2
TP403	K-5
TP404	M-1
TP405	M-1
TP406	L-2
TP407	L-6
TP408	K-5
TP501	M-4
TP502	H-2
TP503	J-5
TP504	H-1
TP505	H-1
TP506	N-2
TP507	M-6
TP508	J-5
TP601	C-5
TP602	B-3
TP603	B-4
TP604	B-5
TP605	A-1
TP701	F-2
TP702	D-4
TP703	E-4
TP704	E-4
TP705	E-4
TP706	E-4
TP707	E-4
TP708	F-2
TP709	F-2
TP801	G-4
TP802	G-5
TP803	G-5
TP804	F-5
TP805	F-4
TP806	H-2
TP807	H-4
TP808	H-4
TP809	F-3
TP810	F-3
TP811	G-3
TP812	G-3
X601	B-3
X602	A-6

* mark; B SIDE mount.

AU-157 BOARD
A Side

Serial No.: (J) 10001—10030
Serial No.: (UC) 10031—10070

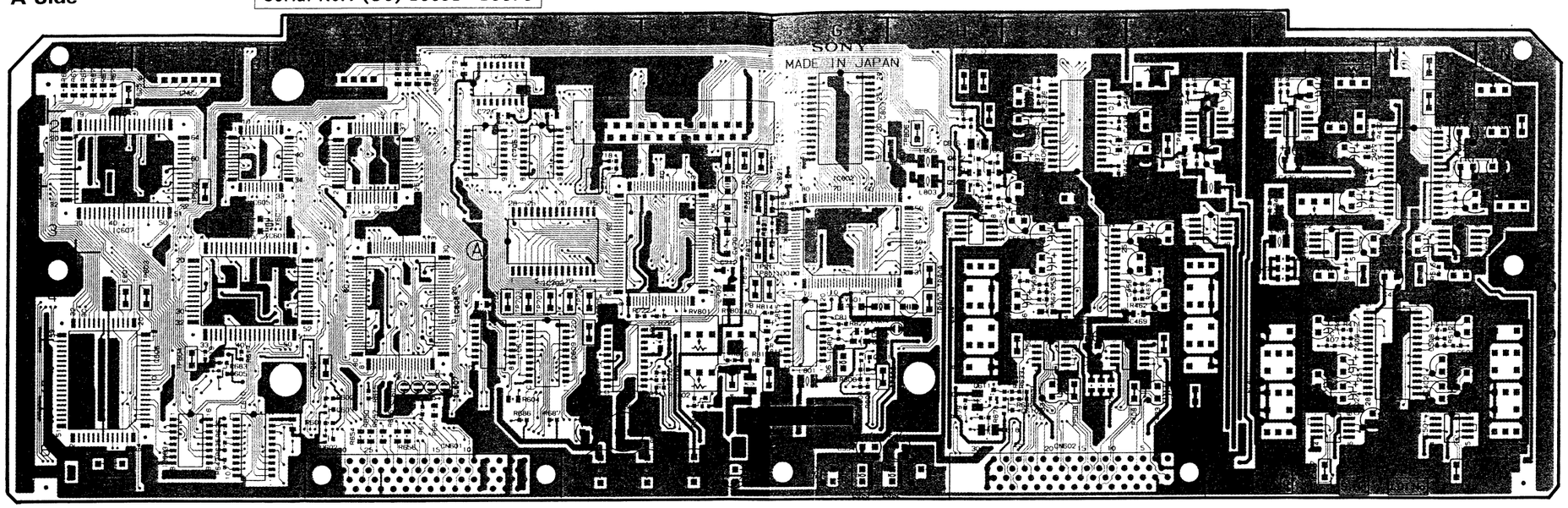

1-642-947-11 A SIDE

A Side is the same as Component Side

AU-157 BOARD
B Side

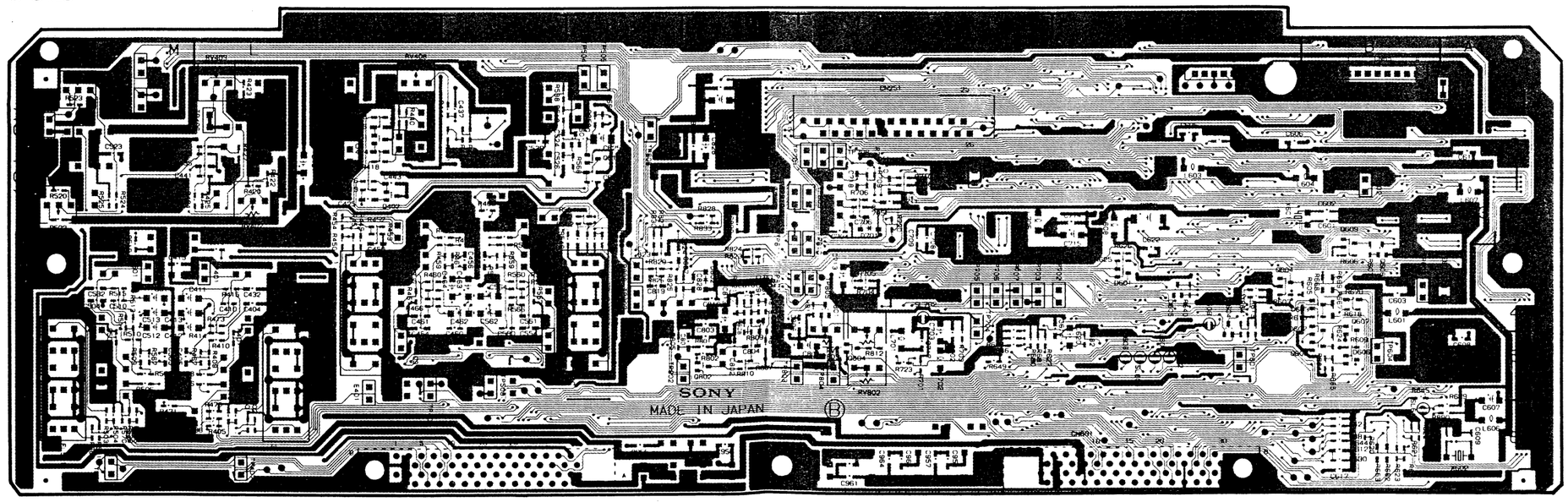

1-642-947-11 B SIDE

B Side is the same as Soldering Side

AU-157 (1-642-947-11)

CN64	C-1	Q605	B-5
CN65	B-1	Q606	B-5 *
CN251	F-2	Q607	B-4 *
CN601	D-6	Q608	B-4 *
CN602	J-6	Q609	B-3 *
		Q610	J-6
CV701	F-3	Q611	H-5
CV801	G-4	Q612	H-2
		Q613	H-2 *
D601	D-4 *	Q801	G-5
D602	B-4 *	Q802	G-5 *
D603	B-4 *	Q803	G-4 *
D604	C-4 *		
D605	D-4 *	RV402	L-3
D606	B-5 *	RV403	L-1
D701	F-3 *	RV408	K-1
D801	F-4 *	RV502	N-3
D802	G-4 *	RV503	N-1
		RV803	F-4
E401	K-5		
E601	A-4	TP401	L-4
E701	E-2	TP402	K-2
E801	H-2	TP403	K-5
		TP404	M-1
FL401	L-5	TP405	M-1
FL402	K-4	TP406	L-2
FL501	N-5	TP407	L-6
FL502	H-4	TP408	K-5
		TP501	M-4
IC401	L-6	TP502	H-2
IC402	M-5	TP503	J-5
IC403	L-3	TP504	H-1
IC404	M-2	TP505	H-1
IC405	L-2	TP506	N-2
IC406	J-2	TP507	M-6
IC407	K-2	TP508	J-5
IC408	K-3	TP601	C-5
IC409	J-3	TP602	B-3
IC410	J-5	TP603	B-4
IC501	M-6	TP604	B-5
IC503	M-3	TP605	A-1
IC508	H-3	TP701	F-2
IC510	J-5	TP702	D-4
IC601	B-4	TP703	E-4
IC603	B-6	TP704	E-4
IC604	C-2	TP705	E-4
IC605	B-2	TP706	E-4
IC607	A-2	TP707	E-4
IC608	D-4	TP708	F-2
IC609	E-4	TP709	F-2
IC610	E-6	TP801	G-4
IC611	D-4	TP802	G-5
IC701	E-4	TP803	G-5
IC702	F-3	TP804	F-5
IC703	D-4	TP805	F-4
IC704	D-1	TP806	H-2
IC705	E-2	TP807	H-4
IC706	E-2	TP808	H-4
IC801	G-4	TP809	F-3
IC802	G-3	TP810	F-3
IC803	G-1	TP811	G-3
		TP812	G-3
Q401	K-2 *		
Q402	K-3 *	X601	B-3
Q501	H-2 *	X602	A-6
Q502	H-3		
Q602	C-6	* mark ; B SIDE mount.	
Q603	C-6		
Q604	C-4 *		

AU-157 BOARD
A Side

Serial No.: (J) 10001—10030
Serial No.: (UC) 10031—10070

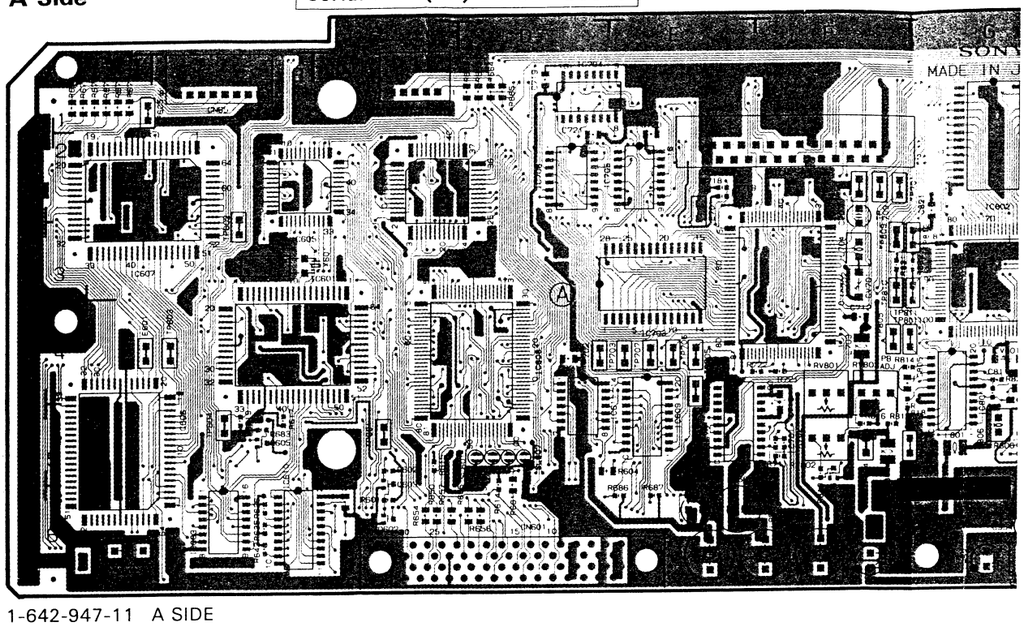

1-642-947-11 A SIDE

A Side is the same as Component Side

AU-157 BOARD
B Side

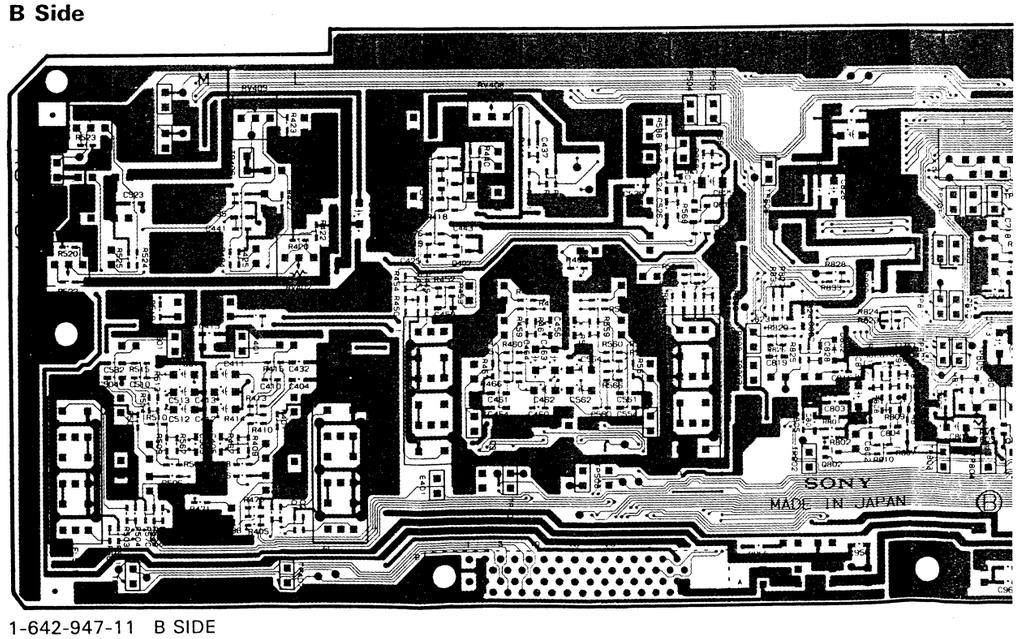

1-642-947-11 B SIDE

B Side is the same as Soldering Side

AU-157 BOARD
A Side

Serial No.: (J) 10121 and higher
Serial No.: (UC) 10341 and higher

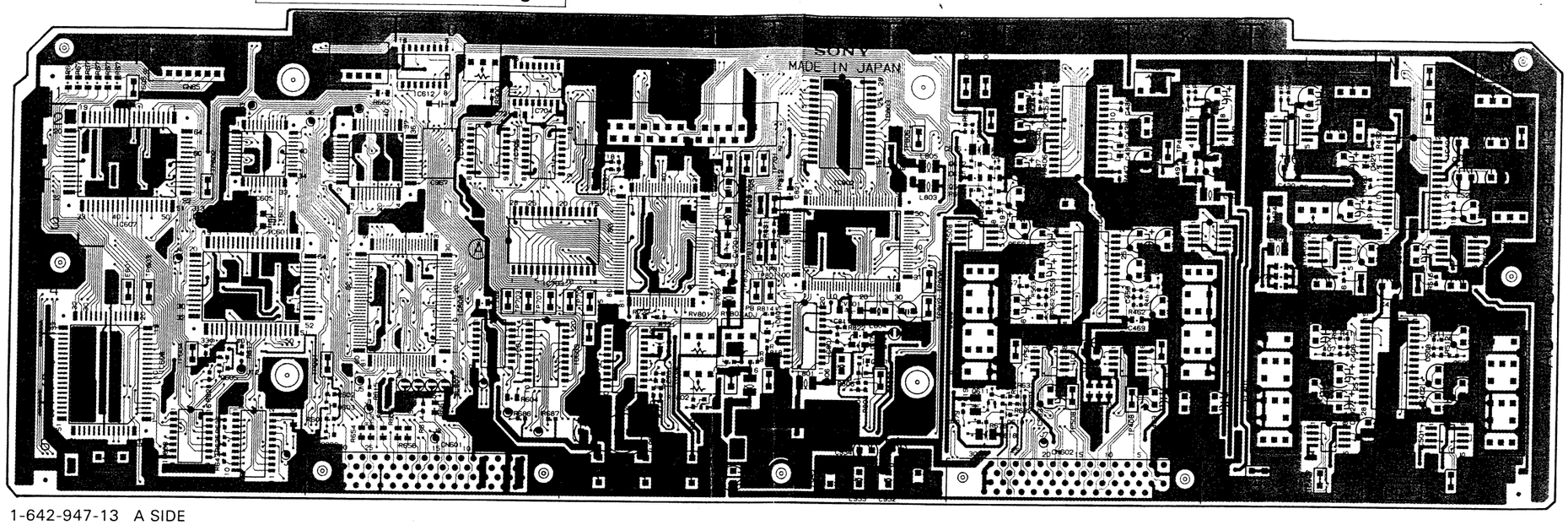

1-642-947-13 A SIDE

A Side is the same as Component Side

AU-157 BOARD
B Side

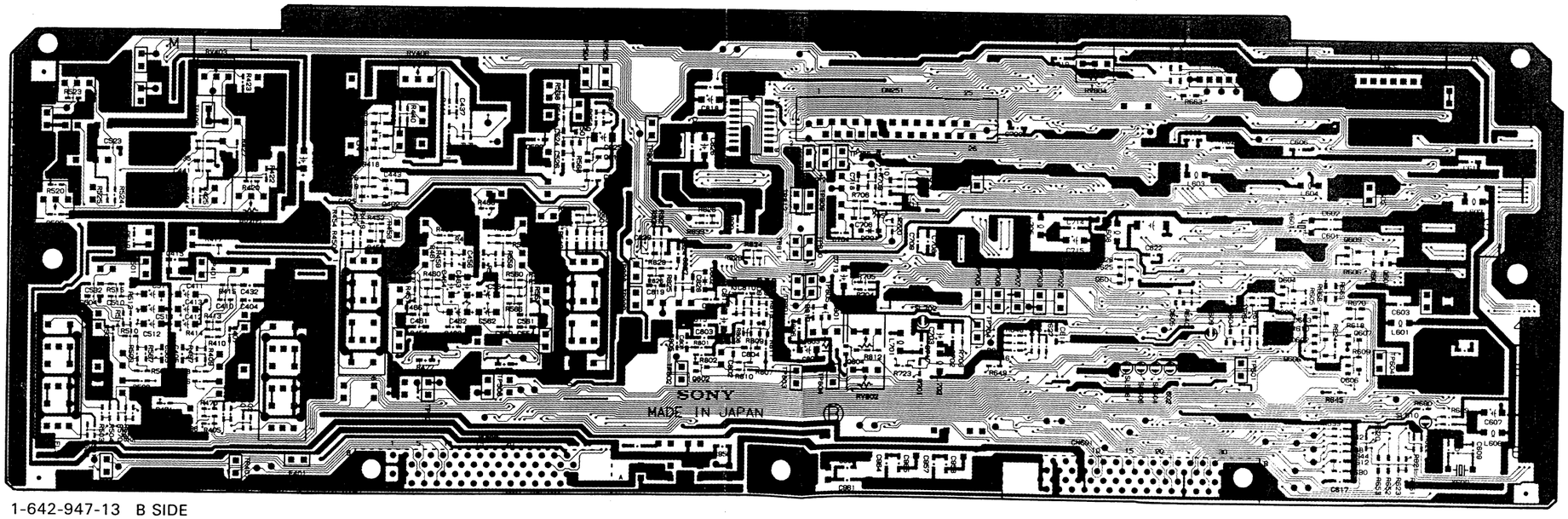

1-642-947-13 B SIDE

B Side is the same as Soldering Side

02 C-6
03 C-6
04 C-4 *
05 B-5
06 C-5 *
07 B-4 *
08 B-4 *
09 B-3 *
10 J-6
11 H-5
12 H-2
13 H-2 *
01 G-5
02 G-5 *
03 G-4 *

102 L-3
103 L-1
108 K-1
202 N-2
203 M-1
303 F-4
304 D-1

01 L-4
02 K-2
03 K-5
04 M-1
05 M-1
06 L-2
07 L-6
08 K-6
01 M-4
02 H-2
03 J-5
04 H-1
05 H-1
06 N-2
07 M-6
08 J-6
01 C-5
02 B-3
03 B-4
04 B-5
05 B-1
01 G-2
02 D-4
03 E-4
04 E-5
05 E-4
06 E-4
07 E-4
08 F-2
09 F-2
11 F-4
12 H-5
13 G-5
14 F-6
15 F-4
16 H-2
17 H-4
18 H-4
19 F-3
20 F-4
21 F-4
22 G-3

C-3
A-6

k; B SIDE mount.

AU-157 (1-642-947-13)

CN64	C-1	Q602	C-6
CN65	B-1	Q603	C-6
CN251	F-2	Q604	C-4 *
CN601	D-6	Q605	B-5
CN602	J-6	Q606	C-5 *
		Q607	B-4 *
CV701	F-3	Q608	B-4 *
CV801	G-4	Q609	B-3 *
		Q610	J-6
D601	D-4 *	Q611	H-5
D602	C-4 *	Q612	H-2
D603	C-4 *	Q613	H-2 *
D604	C-4 *	Q801	G-5
D605	D-4 *	Q802	G-5 *
D606	B-5 *	Q803	G-4 *
D701	F-3 *		
D801	F-4 *	RV402	L-3
D802	G-4 *	RV403	L-1
		RV408	K-1
E401	L-6	RV502	N-2
E601	A-4	RV503	M-1
E701	E-3	RV803	F-4
E801	H-2	RV804	D-1
FL401	L-5	TP401	L-4
FL402	K-4	TP402	K-2
FL501	N-6	TP403	K-5
FL502	H-4	TP404	M-1
		TP405	M-1
IC401	L-6	TP406	L-2
IC402	M-5	TP407	L-6
IC403	L-4	TP408	K-6
IC404	M-2	TP501	M-4
IC405	L-2	TP502	H-2
IC406	J-2	TP503	J-5
IC407	K-2	TP504	H-1
IC408	K-3	TP505	H-1
IC409	J-3	TP506	N-2
IC410	J-5	TP507	M-6
IC501	M-6	TP508	J-6
IC503	N-4	TP601	C-5
IC508	H-3	TP602	B-3
IC510	J-5	TP603	B-4
IC601	B-3	TP604	B-5
IC603	B-6	TP605	B-1
IC604	C-2	TP701	G-2
IC605	B-3	TP702	D-4
IC606	B-5	TP703	E-4
IC607	A-3	TP704	E-5
IC608	D-4	TP705	E-4
IC609	E-5	TP706	E-4
IC610	B-6	TP707	E-4
IC611	E-5	TP708	F-2
IC612	D-1	TP709	F-2
IC613	G-1 *	TP801	F-4
IC701	E-5	TP802	H-5
IC702	F-3	TP803	G-5
IC703	E-4	TP804	F-6
IC704	E-1	TP805	F-4
IC705	E-2	TP806	H-2
IC706	D-2	TP807	H-4
IC801	G-5	TP808	H-4
IC802	G-2	TP809	F-3
IC803	G-2	TP810	F-4
		TP811	F-4
Q401	K-2 *	TP812	G-3
Q402	K-3 *		
Q501	H-2 *	X601	C-3
Q502	H-2	X602	A-6

* mark ; B SIDE mount.

AU-157 BOARD
A Side

Serial No.: (J) 10121 and higher
Serial No.: (UC) 10341 and higher

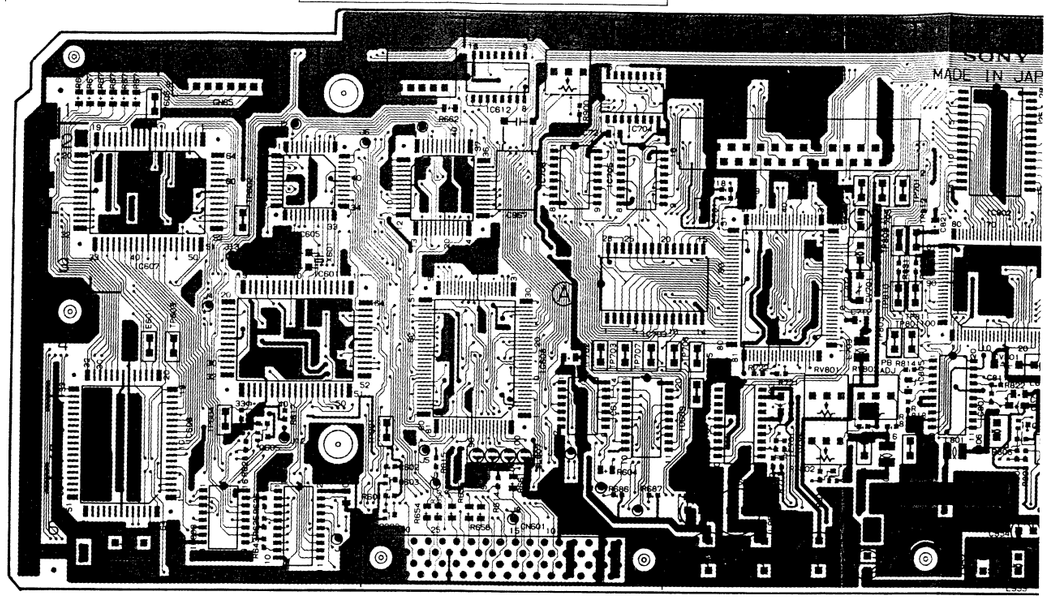

1-642-947-13 A SIDE

A Side is the same as Component Side

AU-157 BOARD
B Side

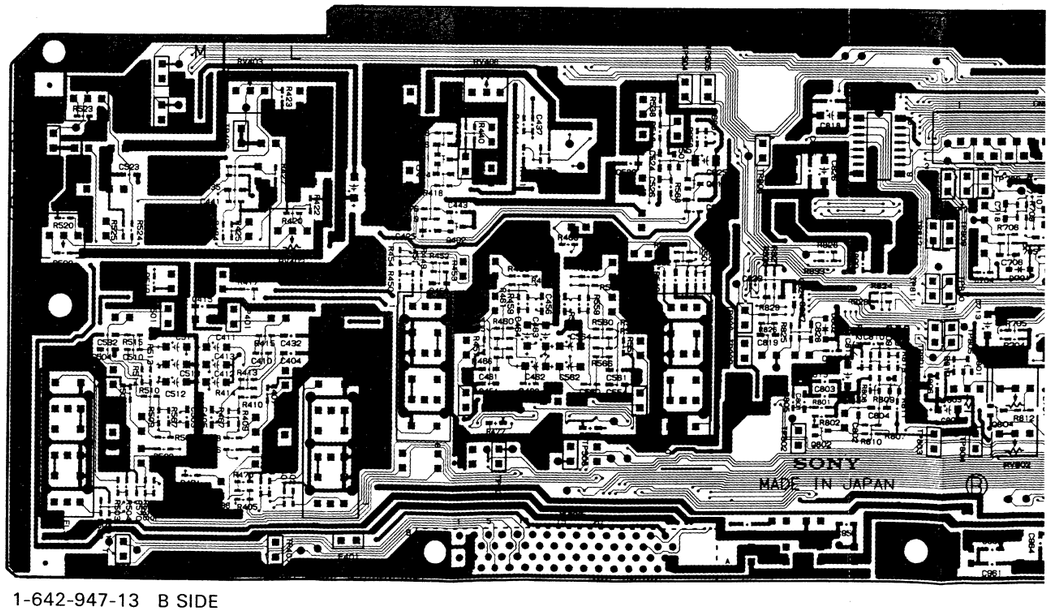

1-642-947-13 B SIDE

B Side is the same as Soldering Side

AU-156 (3/3)

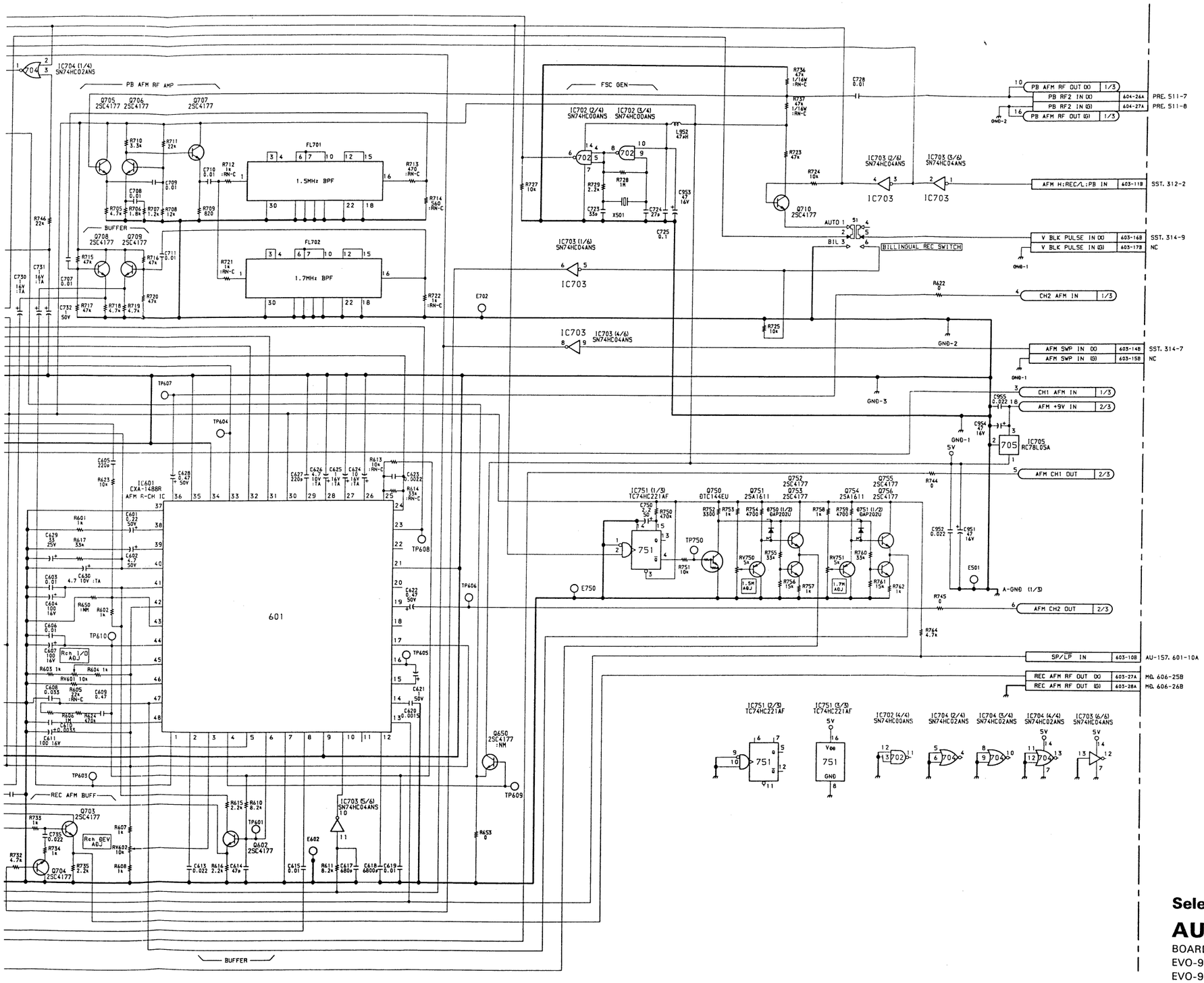

Select Buffer

AU-156 BOARD (3/3)

BOARD NO. 1-642-943-11, 12
EVO-9850 (J) : # 10001—
EVO-9850 (UC) : # 10031—

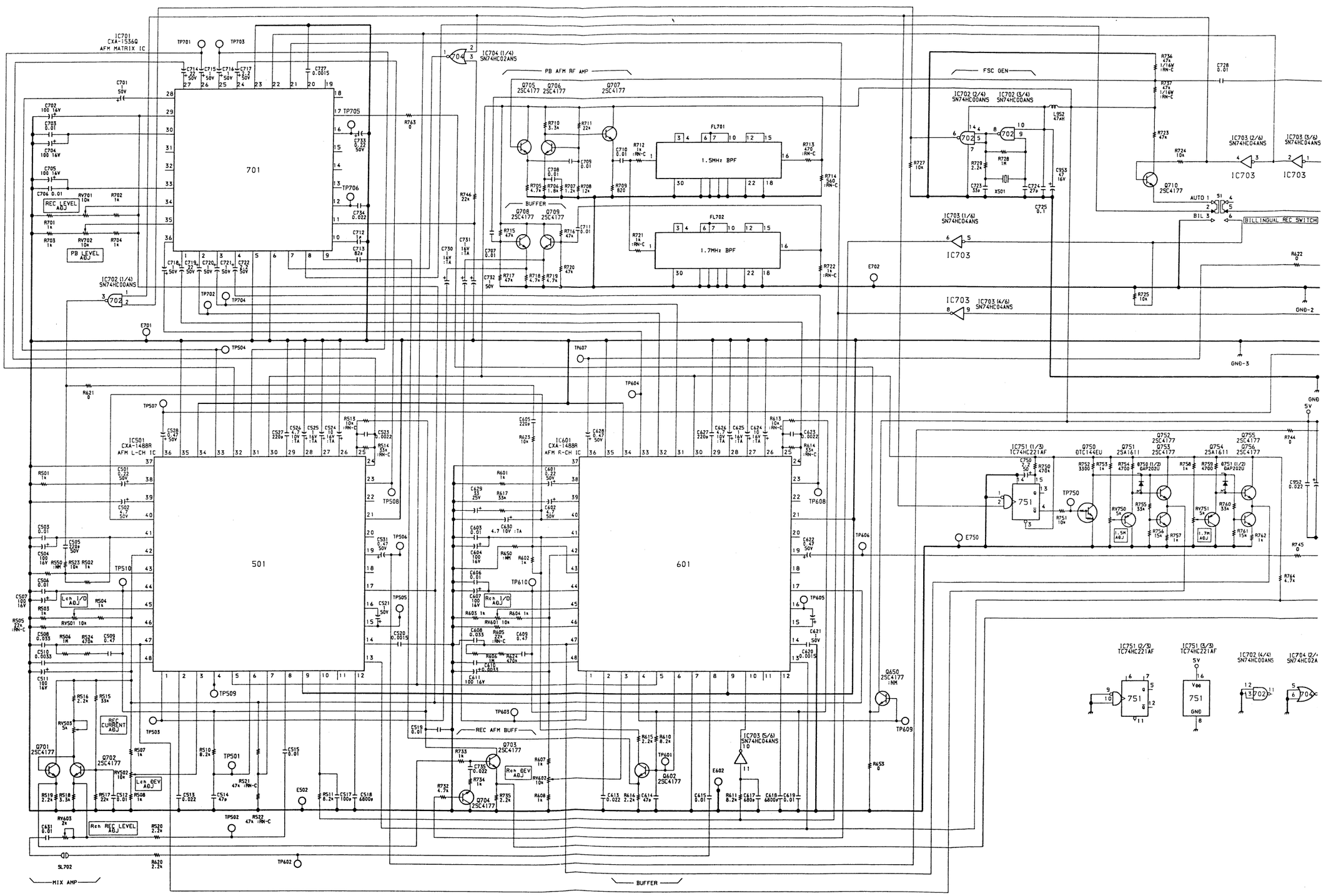
IC701 CXA-1536Q AFM MATRIX IC
701
PB AFM RF AMP
BUFFER
FSC GEN
FL701 1.5MHz BPF
FL702 1.7MHz BPF
REC LEVEL ADJ
PB LEVEL ADJ
IC501 CXA-1488R AFM L-CH IC
501
IC601 CXA-1488R AFM R-CH IC
601
Lch I/O ADJ
Rch I/O ADJ
Lch REC LEVEL ADJ
Rch REC LEVEL ADJ
REC CURRENT ADJ
Lch OEV ADJ
Rch OEV ADJ
REC AFM BUFF
MIX AMP
BUFFER
BILLINGUAL REC SWITCH
IC751 (1/3) TC74HC221AF
IC751 (2/3) TC74HC221AF
IC751 (3/3) TC74HC221AF
IC702 (4/4) SN74HC00ANS
IC704 (2/4) SN74HC02ANS
GND-2
GND-3
GND
5V

A | B | C | D | E | F | G | H

Serial No.: (J) 10031 and higher
Serial No.: (UC) 10071 and higher

AU-157 BOARD
A Side

B-5
B-5 *
B-4 *
B-4 *
B-3 *
J-6
H-5
H-2
H-2 *
G-5
G-5 *
G-4 *

L-3
L-1
K-1
N-3
M-1
F-4

L-4
K-2
K-5
M-1
M-1
L-2
L-6
K-6
M-4
H-2
J-5
H-1
H-1
N-2
M-6
J-5
C-5
B-3
B-4
B-5
B-1
G-2
D-4
E-4
E-4
E-4
E-4
E-4
F-2
F-2
F-4
H-5
G-5
F-6
F-4
H-2
H-4
H-4
F-3
F-4
F-4
G-3

C-3

B SIDE mount.

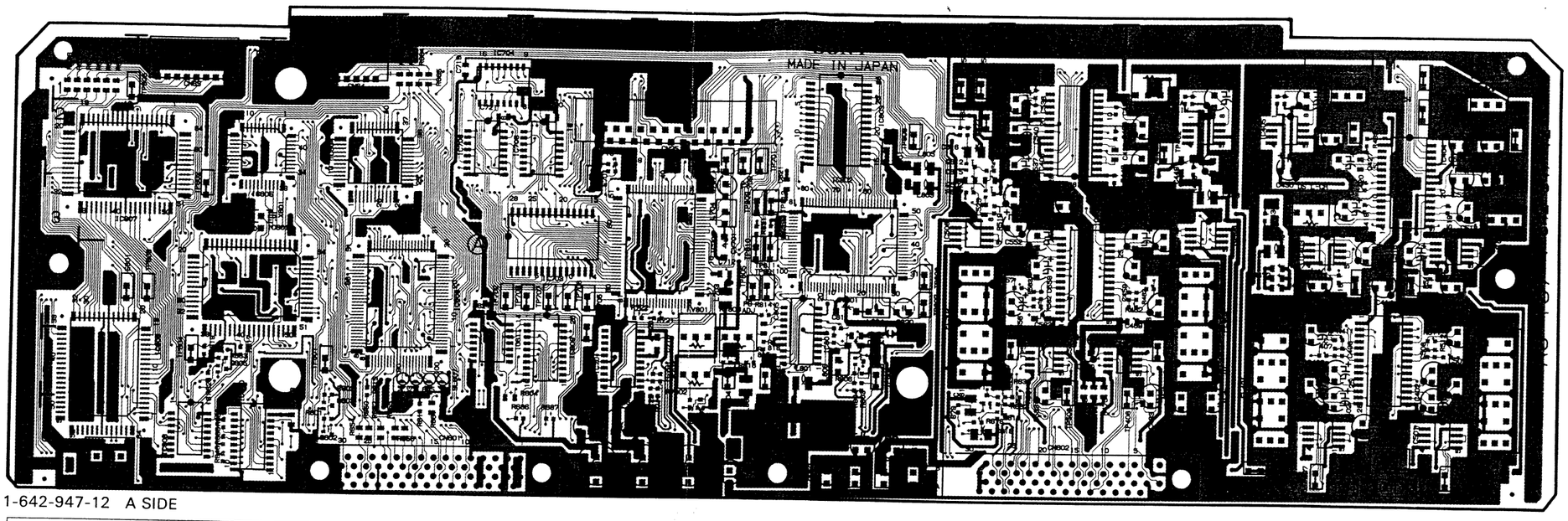

1-642-947-12 A SIDE

A Side is the same as Component Side

AU-157 BOARD
B Side

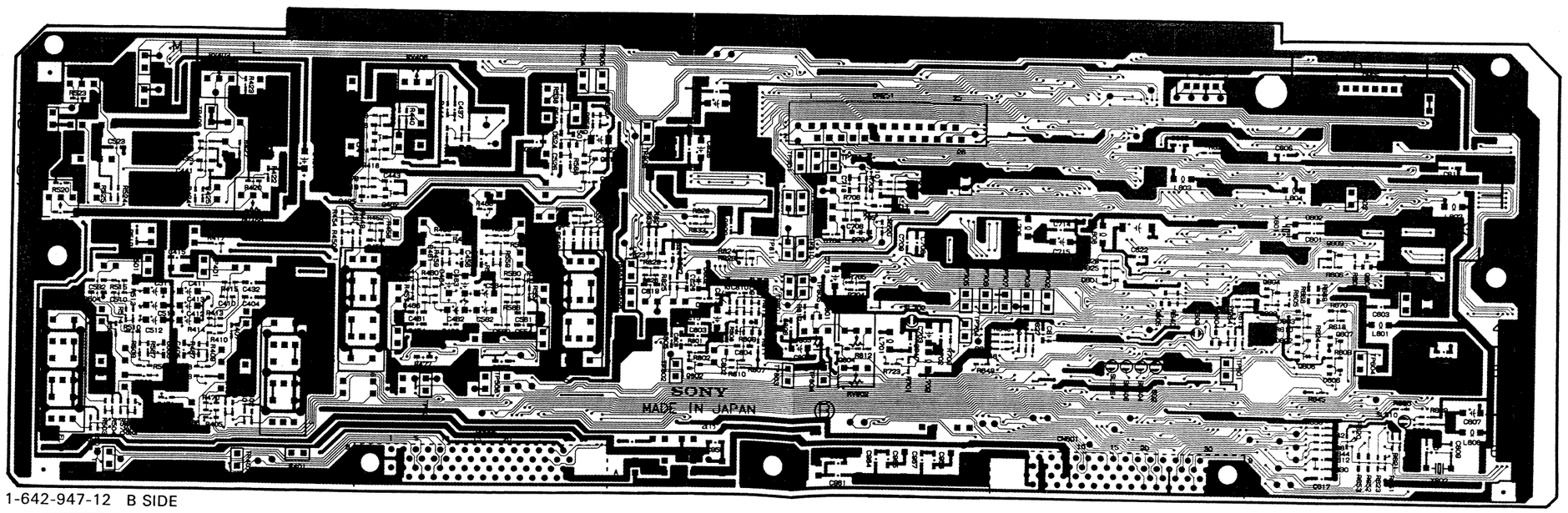

1-642-947-12 B SIDE

B Side is the same as Soldering Side

AU-157 (1-642-947-12)

CN64	C-1	Q605	B-5
CN65	B-1	Q606	B-5 *
CN251	F-2	Q607	B-4 *
CN601	D-6	Q608	B-4 *
CN602	J-6	Q609	B-3 *
		Q610	J-6
CV701	F-3	Q611	H-5
CV801	G-4	Q612	H-2
		Q613	H-2 *
D601	D-4 *	Q801	G-5
D602	C-4 *	Q802	G-5 *
D603	C-4 *	Q803	G-4 *
D604	C-4 *		
D605	D-4 *	RV402	L-3
D606	B-5 *	RV403	L-1
D701	F-3 *	RV408	K-1
D801	F-4 *	RV502	N-3
D802	G-4 *	RV503	M-1
		RV803	F-4
E401	L-6		
E601	A-4	TP401	L-4
E701	E-3	TP402	K-2
E801	H-2	TP403	K-5
		TP404	M-1
FL401	L-5	TP405	M-1
FL402	K-4	TP406	L-2
FL501	N-6	TP407	L-6
FL502	H-4	TP408	K-6
		TP501	M-4
IC401	L-6	TP502	H-2
IC402	M-5	TP503	J-5
IC403	L-4	TP504	H-1
IC404	M-2	TP505	H-1
IC405	L-2	TP506	N-2
IC406	J-2	TP507	M-6
IC407	K-2	TP508	J-5
IC408	K-3	TP601	C-5
IC409	J-3	TP602	B-3
IC410	J-5	TP603	B-4
IC501	M-6	TP604	B-5
IC503	N-4	TP605	B-1
IC508	H-3	TP701	G-2
IC510	J-5	TP702	D-4
IC601	B-3	TP703	E-4
IC603	B-6	TP704	E-4
IC604	C-2	TP705	E-4
IC605	B-3	TP706	E-4
IC607	A-3	TP707	E-4
IC608	D-4	TP708	F-2
IC609	E-5	TP709	F-2
IC610	E-6	TP801	F-4
IC611	E-5	TP802	H-5
IC701	E-5	TP803	G-5
IC702	F-3	TP804	F-6
IC703	E-4	TP805	F-4
IC704	D-1	TP806	H-2
IC705	D-2	TP807	H-4
IC706	E-2	TP808	H-4
IC801	G-5	TP809	F-3
IC802	G-2	TP810	F-4
IC803	G-2	TP811	F-4
		TP812	G-3
Q401	K-2 *		
Q402	K-3 *	X601	C-3
Q501	H-2 *		
Q502	H-2	* mark; B SIDE mount.	
Q602	C-6		
Q603	C-6		
Q604	C-4 *		

AU-157 BOARD
A Side

Serial No.: (J) 10031 and higher
Serial No.: (UC) 10071 and higher

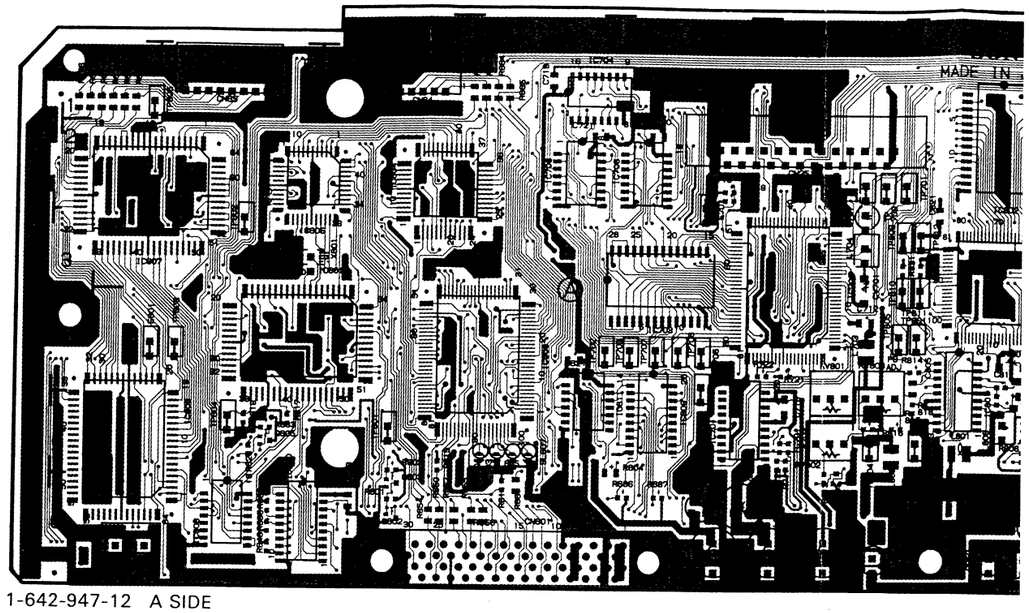

1-642-947-12 A SIDE

A Side is the same as Component Side

AU-157 BOARD
B Side

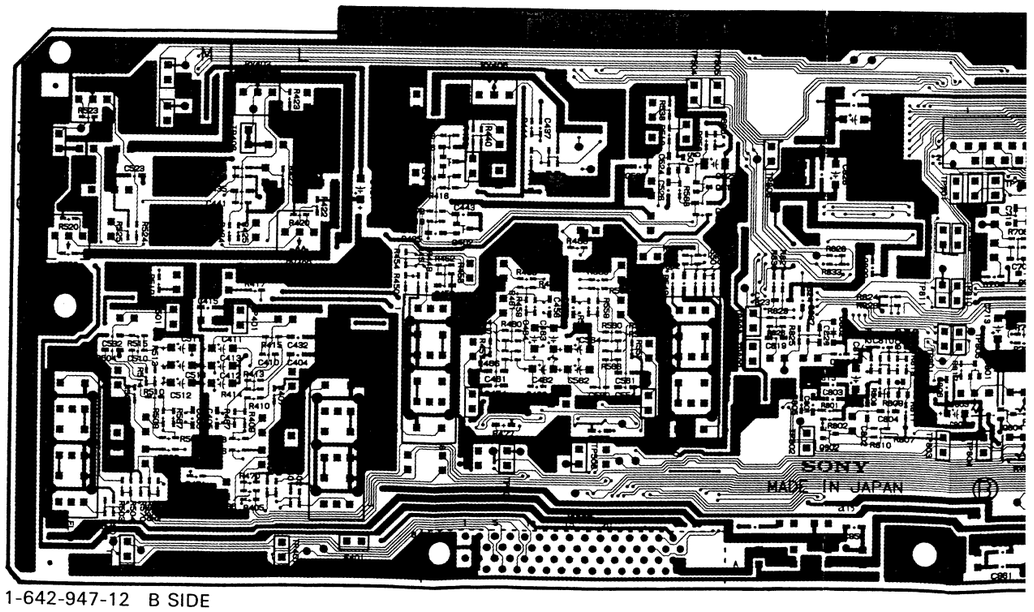

1-642-947-12 B SIDE

B Side is the same as Soldering Side

AU-156 (3/3)

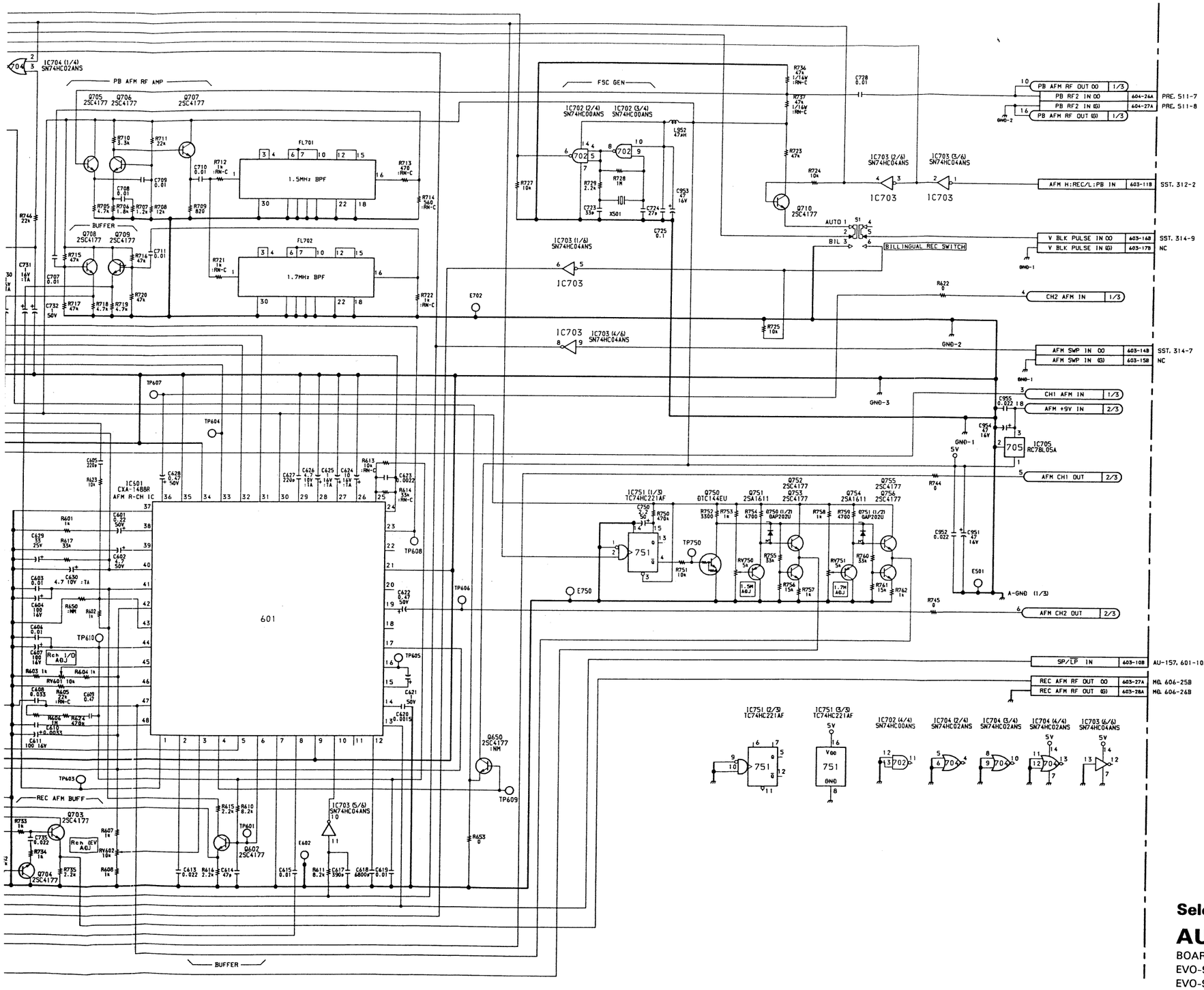

Select Buffer

AU-156 BOARD (3/3)

BOARD NO. 1-642-943-11, 12
EVO-9850 (J) : # 10001—
EVO-9850 (UC) : # 10031—

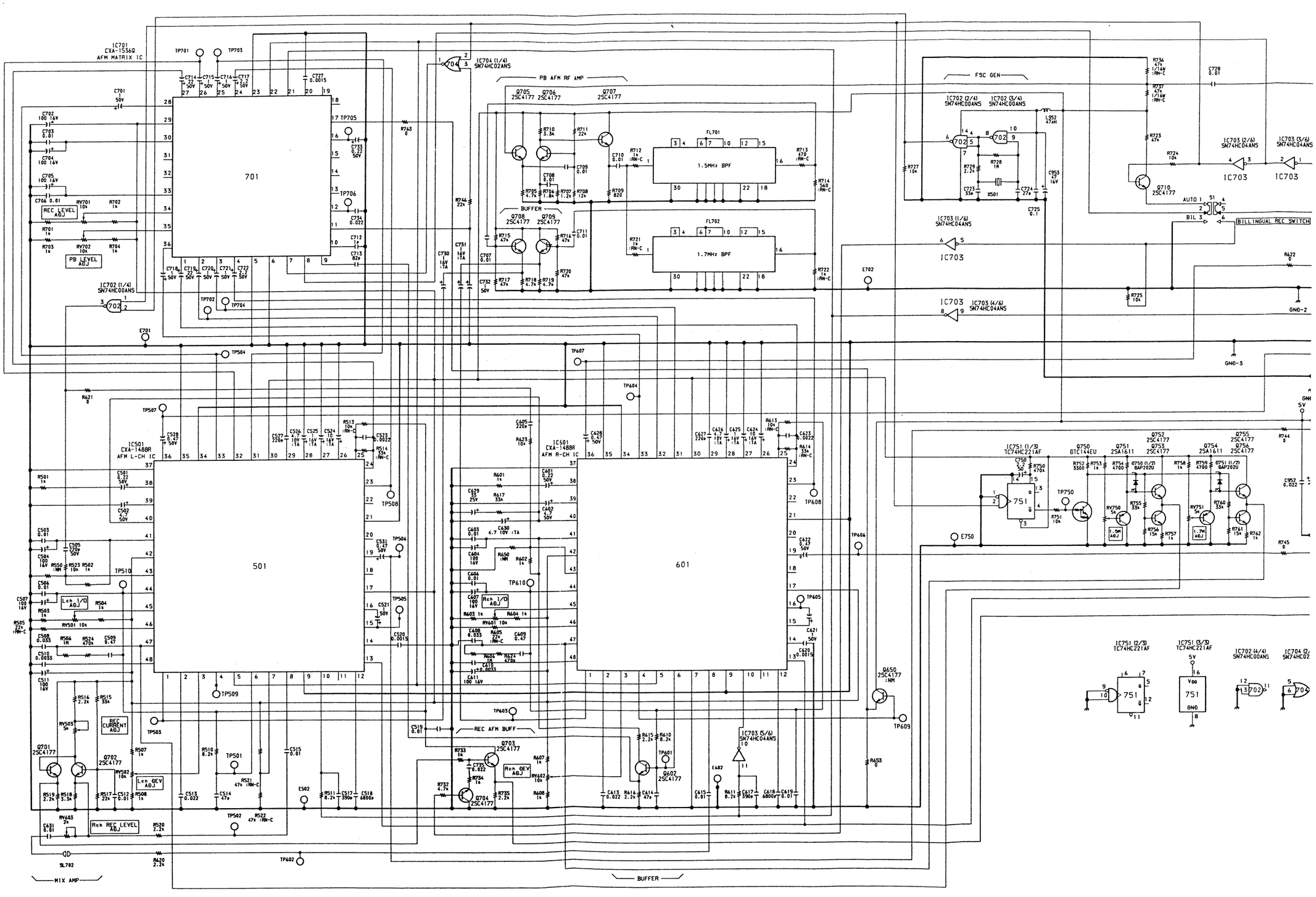

13-35 13-35

A B C D E F G H

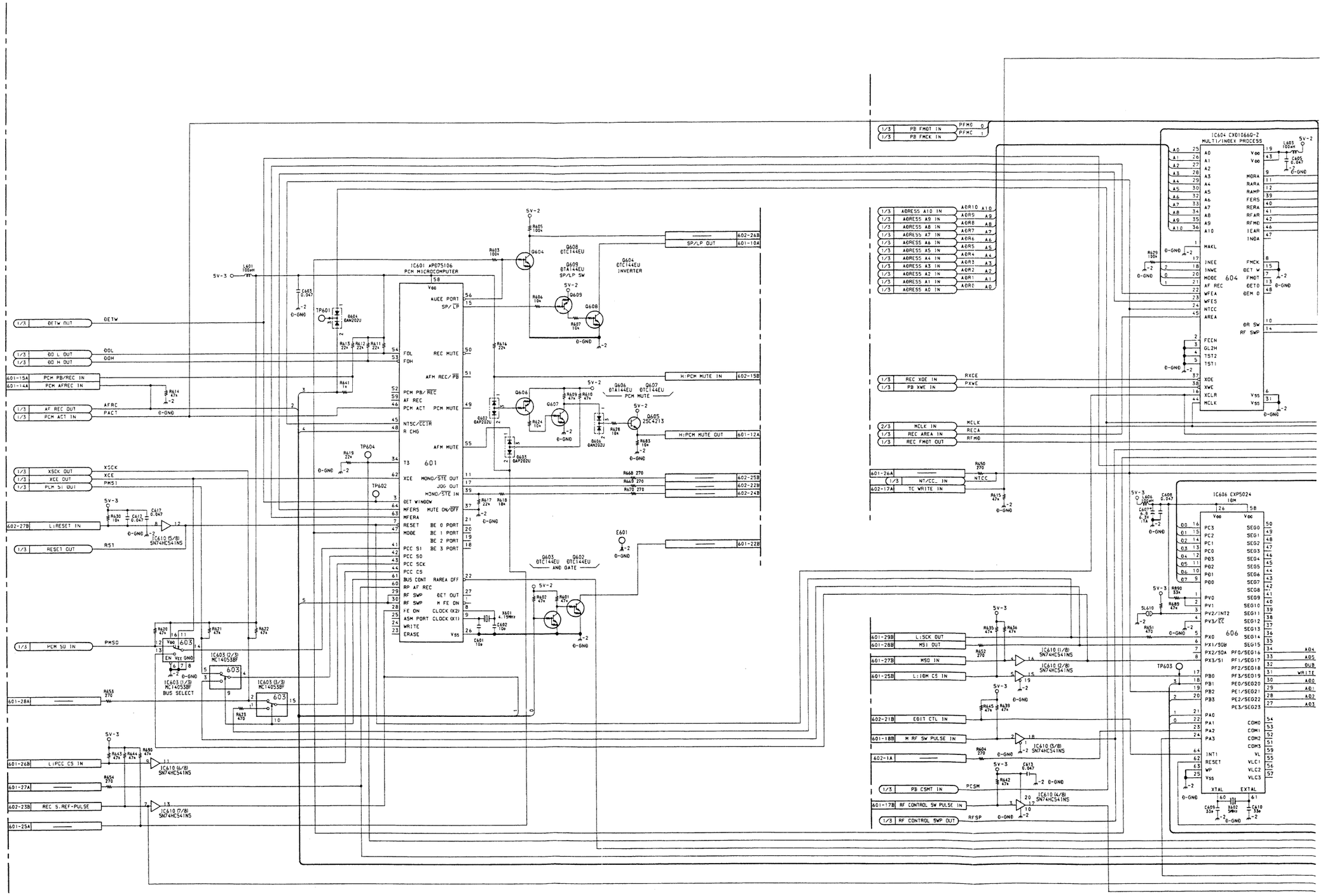

13-41 13-41

A | B | C | D | E | F | G | H

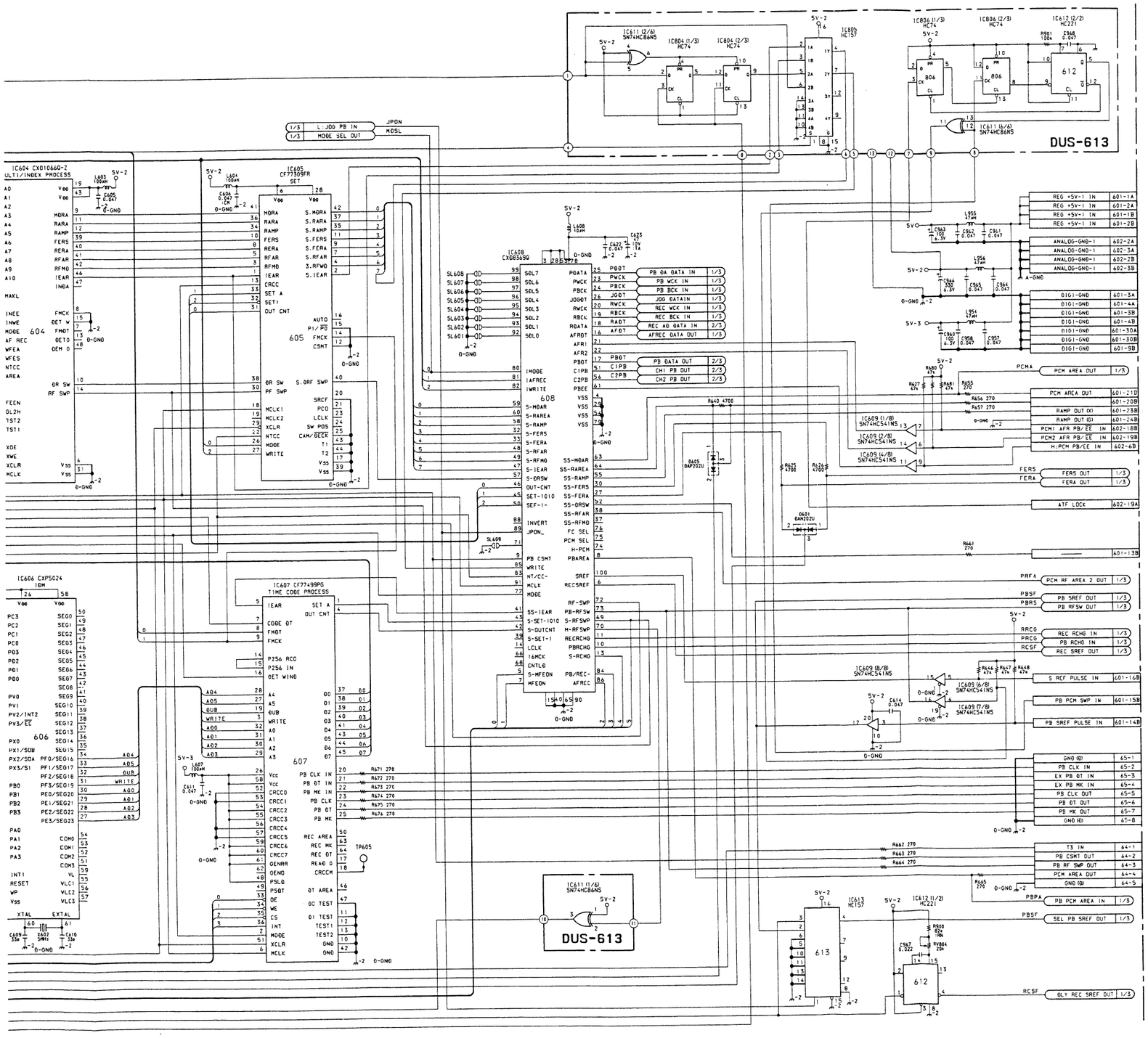

PCM Audio Control and Time Code

AU-157 BOARD (3/3)

BOARD NO. 1-642-947-11, 12
EVO-9850 (J) : # 10001—
EVO-9850 (UC) : # 10031—

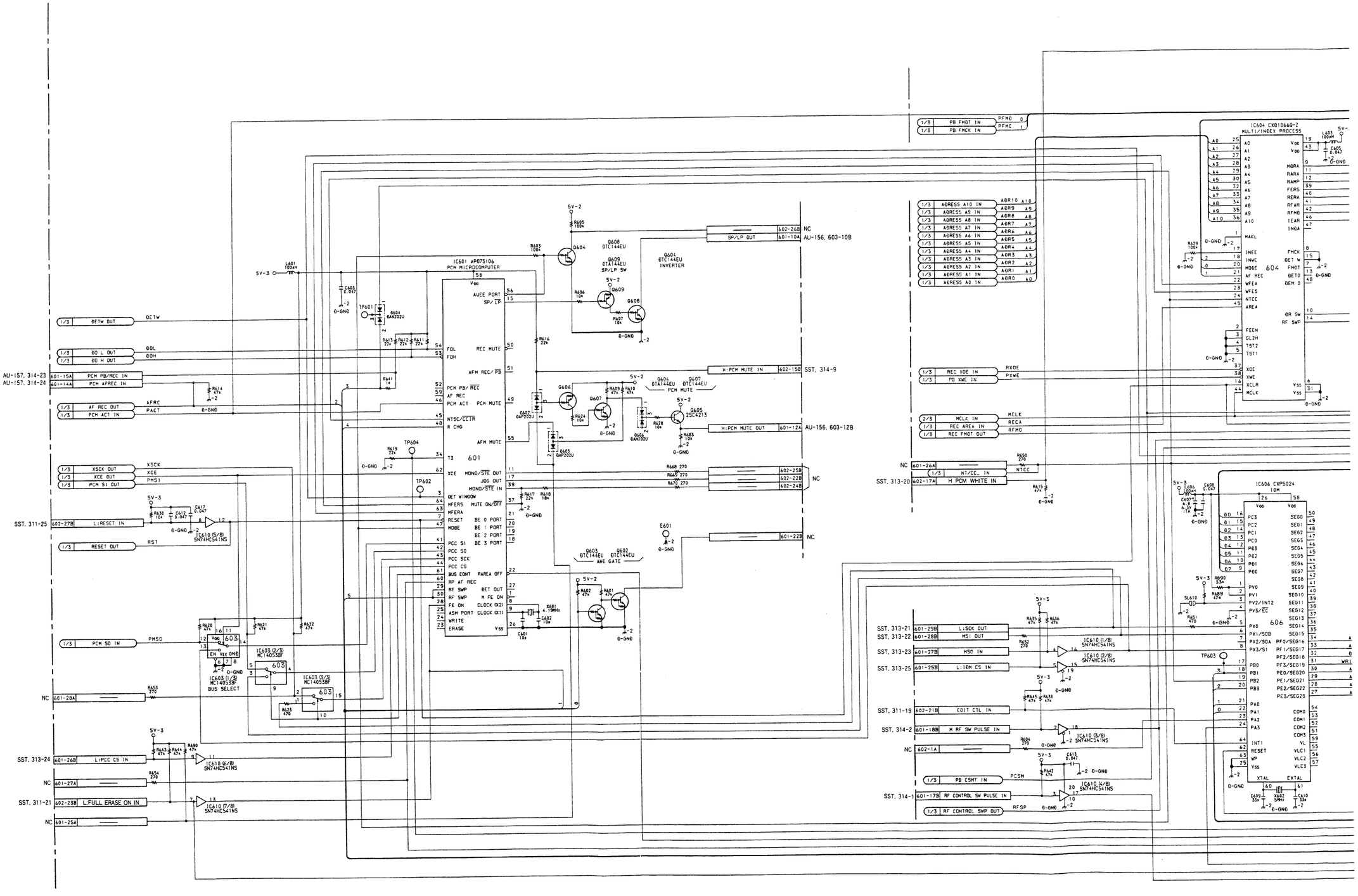
IC601 #P075106
PCM MICROCOMPUTER
IC604 CXD10660-Z
MULTI/INDEX PROCESS
IC606 CXP5024
10M
IC603 (1/3) MC14053BF
BUS SELECT
IC603 (2/3) MC14053BF
IC603 (3/3) MC14053BF
IC610 (1/8) SN74HC541NS
IC610 (2/8) SN74HC541NS
IC610 (3/8) SN74HC541NS
IC610 (4/8) SN74HC541NS
IC610 (5/8) SN74HC541NS
IC610 (6/8) SN74HC541NS
IC610 (7/8) SN74HC541NS
IC610 (8/8) SN74HC541NS
DETW
DOL
DOH
PCM PB/REC IN
PCM AFREC IN
AFRC
PACT
XSCK
XCE
PMSI
L:RESET IN
RST
PMSO
NC
L:PCC CS IN
L:FULL ERASE ON IN
SP/LP OUT
H:PCM MUTE IN
H:PCM MUTE OUT
PB FMDT IN
PB FMCK IN
ADRESS A10 IN
ADRESS A9 IN
ADRESS A8 IN
ADRESS A7 IN
ADRESS A6 IN
ADRESS A5 IN
ADRESS A4 IN
ADRESS A3 IN
ADRESS A2 IN
ADRESS A1 IN
ADRESS A0 IN
REC XOE IN
PB XWE IN
MCLK IN
REC AREA IN
REC FMDT OUT
NT/CC, IN
H PCM WHITE IN
L:SCK OUT
MSI OUT
MSO IN
L:IDM CS IN
EDIT CTL IN
H RF SW PULSE IN
PB CSMT IN
RF CONTROL SW PULSE IN
RF CONTROL SWP OUT
AU-156, 603-10B
AU-156, 603-12B
SST, 314-9
AU-157, 314-23
AU-157, 314-24
SST, 311-25
SST, 313-24
SST, 311-21
SST, 313-20
SST, 313-21
SST, 313-22
SST, 313-23
SST, 313-25
SST, 311-19
SST, 314-2
SST, 314-1
13-41(a)
13-41(a)

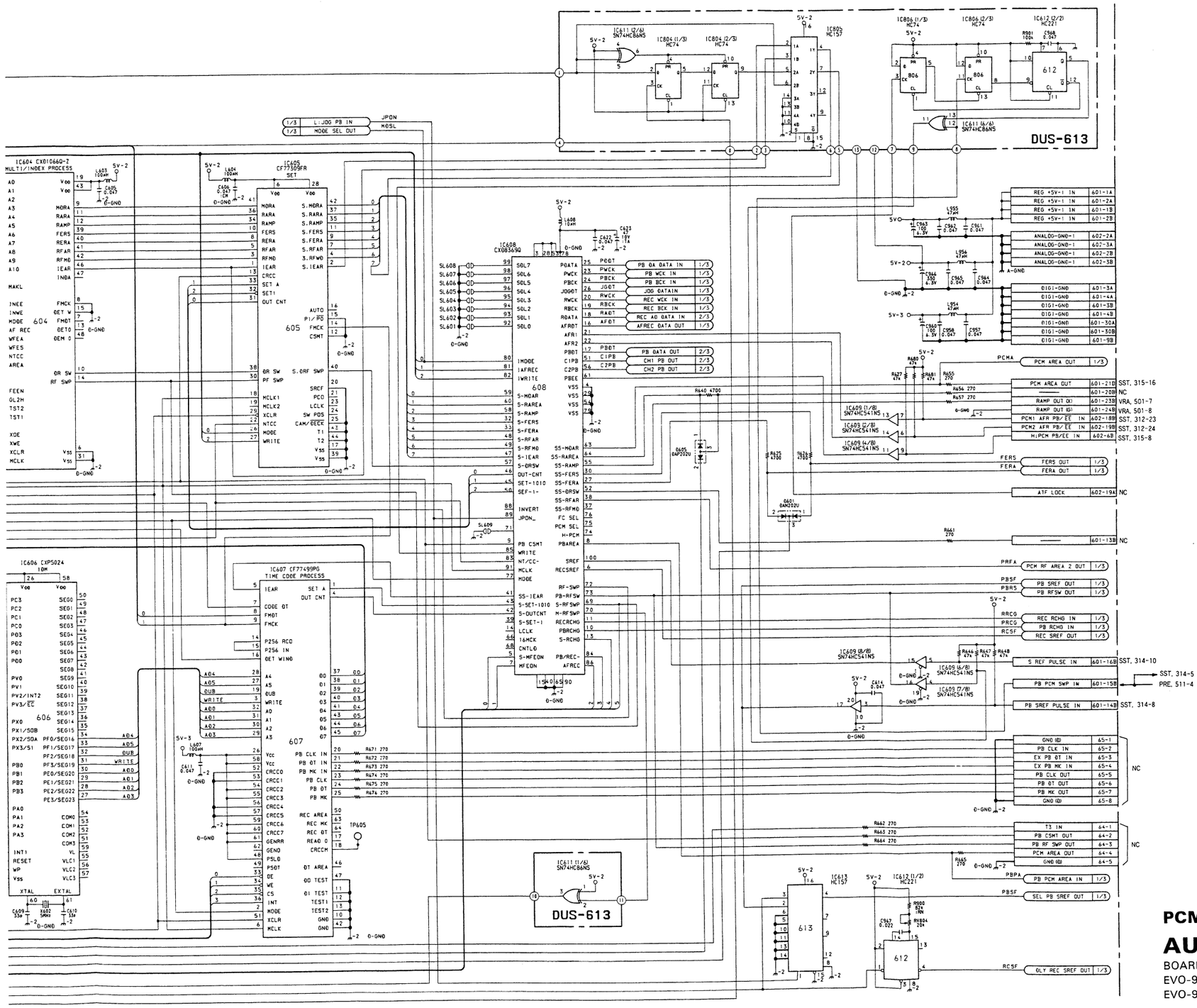

PCM Audio Control and Time Code

AU-157 BOARD (3/3)

BOARD NO. 1-642-947-11, 12
EVO-9850 (J) : # 10001—10120
EVO-9850 (UC) : # 10031—10340

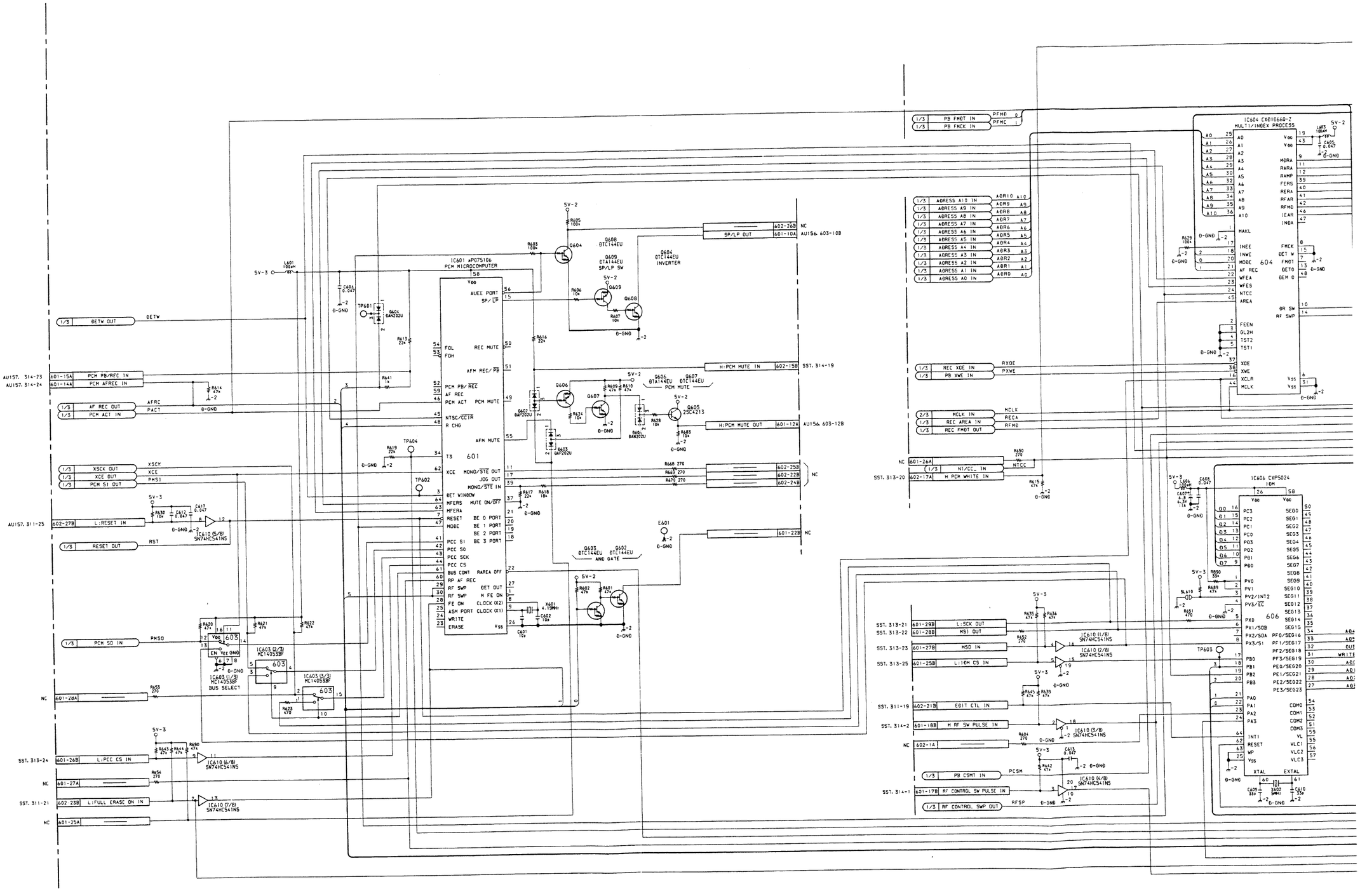
IC601 μPD75106
PCM MICROCOMPUTER
IC604 CXD1066Q-Z
MULTI/INDEX PROCESS
IC606 CXP5024
10M
IC603 (1/3) MC14053BF
BUS SELECT
IC603 (2/3) MC14053BF
IC603 (3/3) MC14053BF
IC610 (1/8) SN74HC541NS
IC610 (2/8) SN74HC541NS
IC610 (3/8) SN74HC541NS
IC610 (4/8) SN74HC541NS
IC610 (5/8) SN74HC541NS
IC610 (6/8) SN74HC541NS
IC610 (7/8) SN74HC541NS
Q604 DTC144EU
Q608 DTC144EU
Q609 DTA144EU SP/LP SW
Q606 DTA144EU PCM MUTE
Q607 DTC144EU
Q605 2SC4213
Q603 DTC144EU AND GATE
Q602 DTC144EU INVERTER
D601 BAN202U
D602 BAP202U
D603 BAP202U
D604 BAN202U
SP/LP OUT
H:PCM MUTE IN
H:PCM MUTE OUT
PB FMDT IN
PB FMCK IN
ADRESS A10 IN
ADRESS A9 IN
ADRESS A8 IN
ADRESS A7 IN
ADRESS A6 IN
ADRESS A5 IN
ADRESS A4 IN
ADRESS A3 IN
ADRESS A2 IN
ADRESS A1 IN
ADRESS A0 IN
REC XDE IN
PB XWE IN
MCLK IN
REC AREA IN
REC FMDT OUT
NT/CC IN
H PCM WHITE IN
DETW OUT
AFRC
PACT
XSCK OUT
XCE OUT
PMSI
PCM SI OUT
RESET OUT
PCM SO IN
PMSO
L:PCC CS IN
L:FULL ERASE ON IN
L:SCK OUT
MSI OUT
MSO IN
L:IOM CS IN
EDIT CTL IN
H RF SW PULSE IN
PB CSMT IN
RF CONTROL SW PULSE IN
RF CONTROL SWP OUT
AU157. 314-23
AU157. 314-24
SST. 314-19
AU156 603-10B
AU156 603-12B
SST. 313-19
SST. 313-20
SST. 313-21
SST. 313-22
SST. 313-23
SST. 313-25
SST. 311-19
SST. 314-2
SST. 314-1
AU157. 311-25
SST. 313-24
SST. 311-21

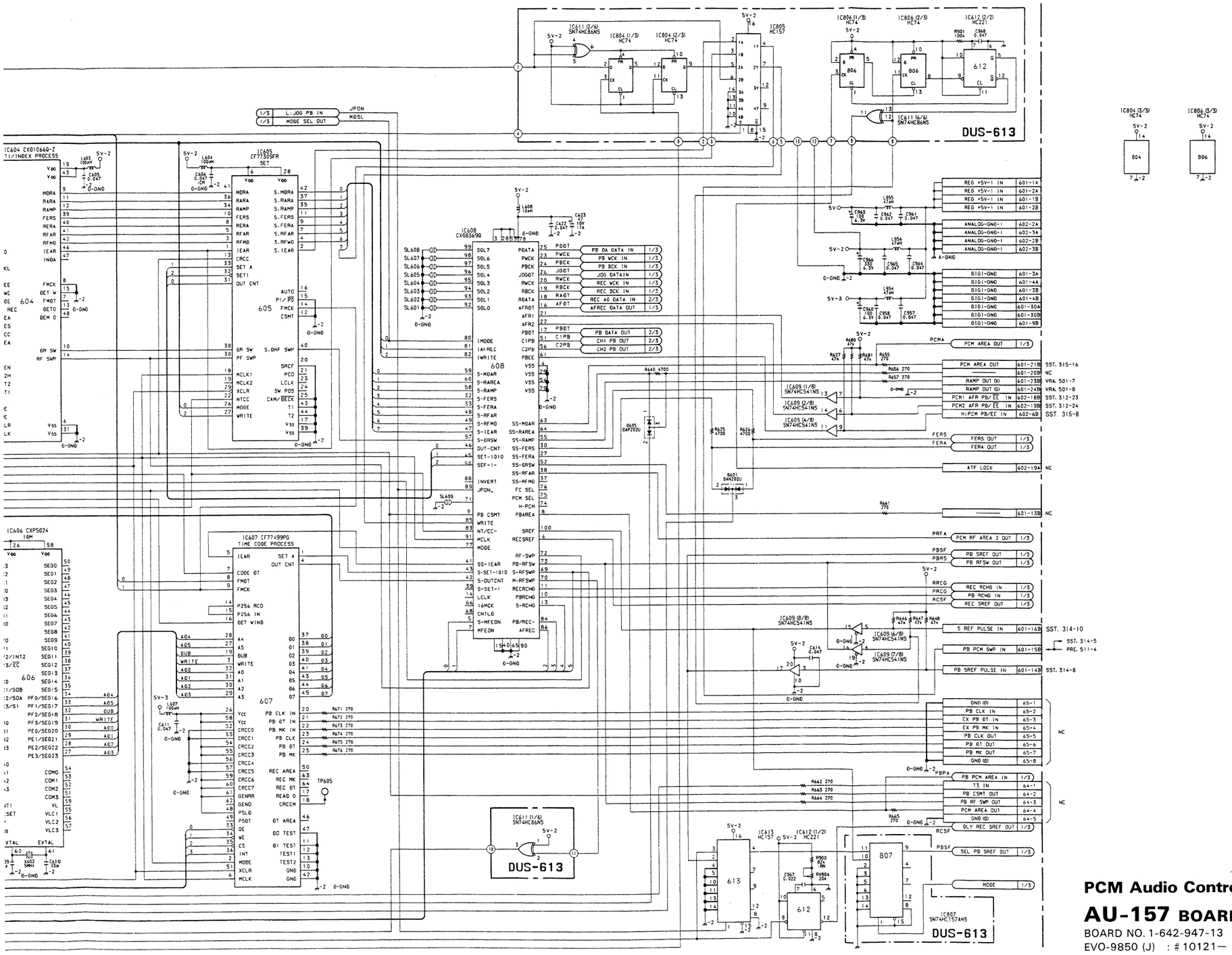

PCM Audio Control and Time Code

AU-157 BOARD (3/3)

BOARD NO. 1-642-947-13
EVO-9850 (J) : # 10121—
EVO-9850 (UC) : # 10341—

13-41 (b) 13-41 (b)

I J K L M N O P

PD-62 BOARD
A Side

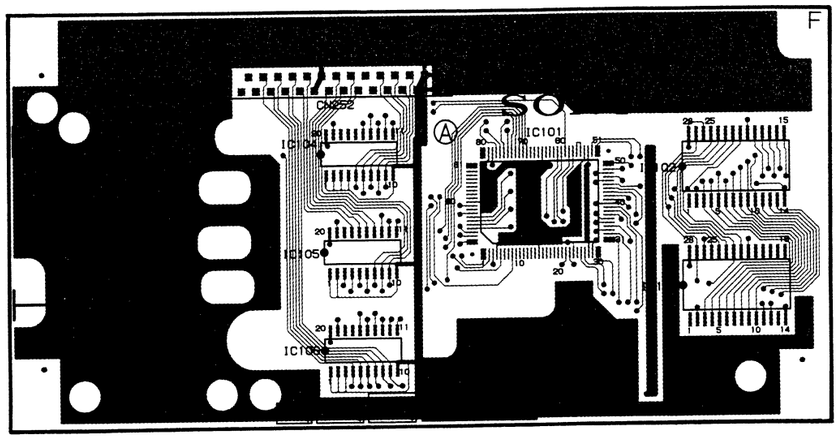

1-645-016-11 A SIDE

A Side is the same as Component Side

PD-62 BOARD
B Side

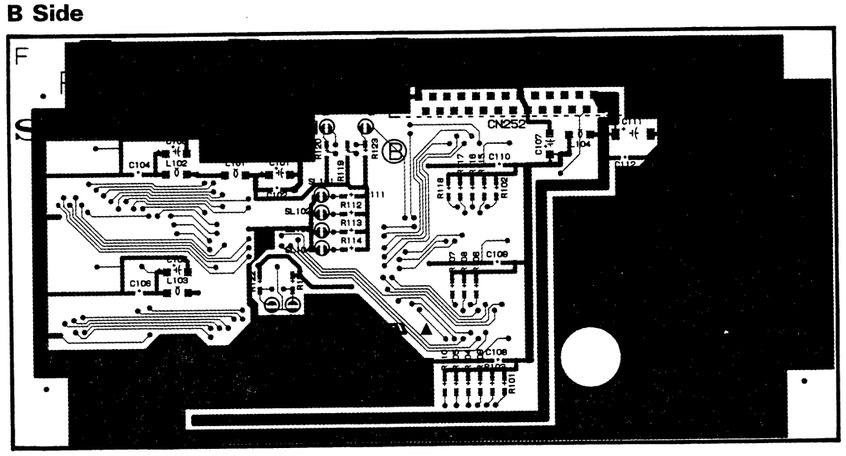

1-645-016-11 B SIDE

B Side is the same as Soldering Side

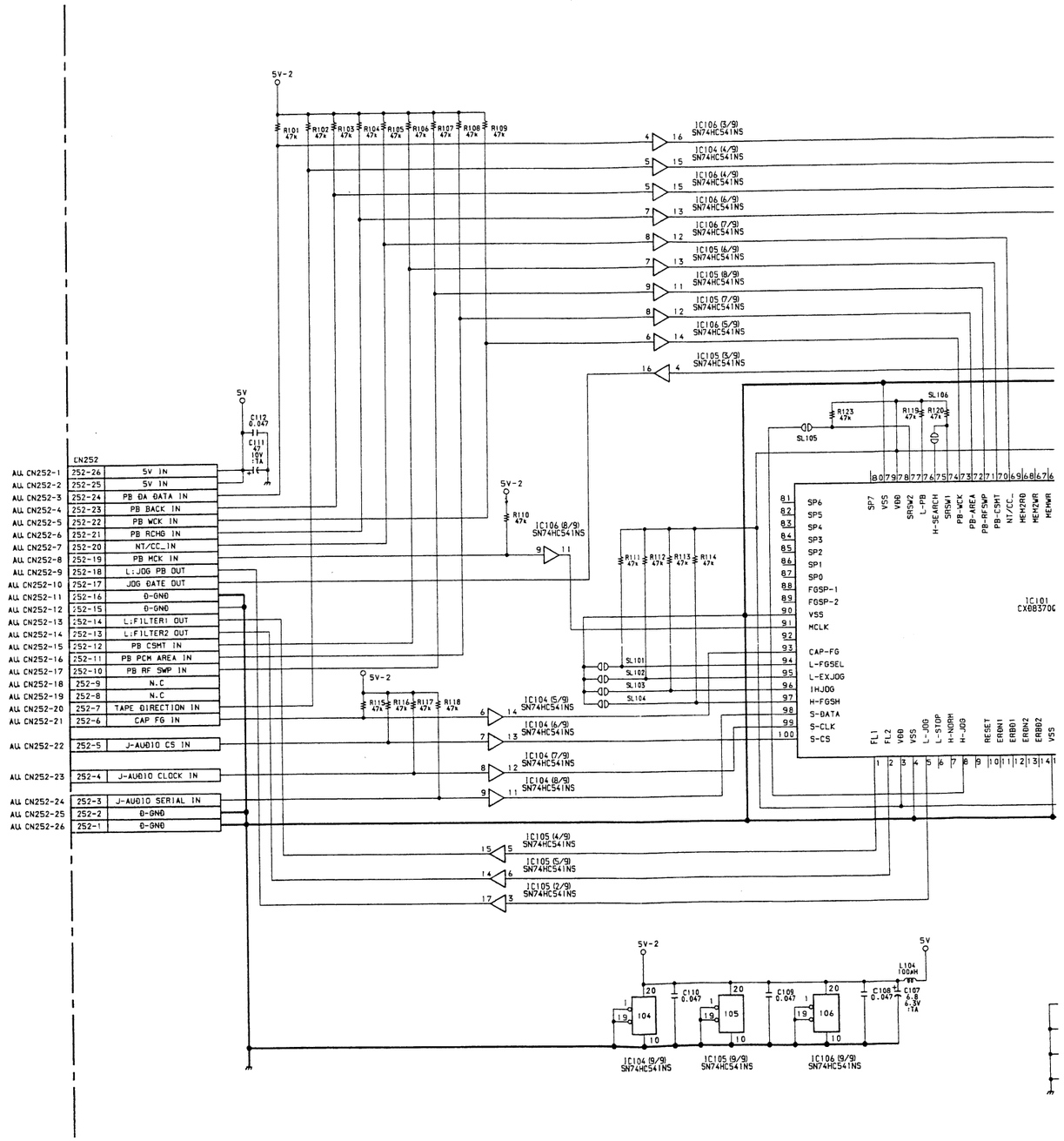

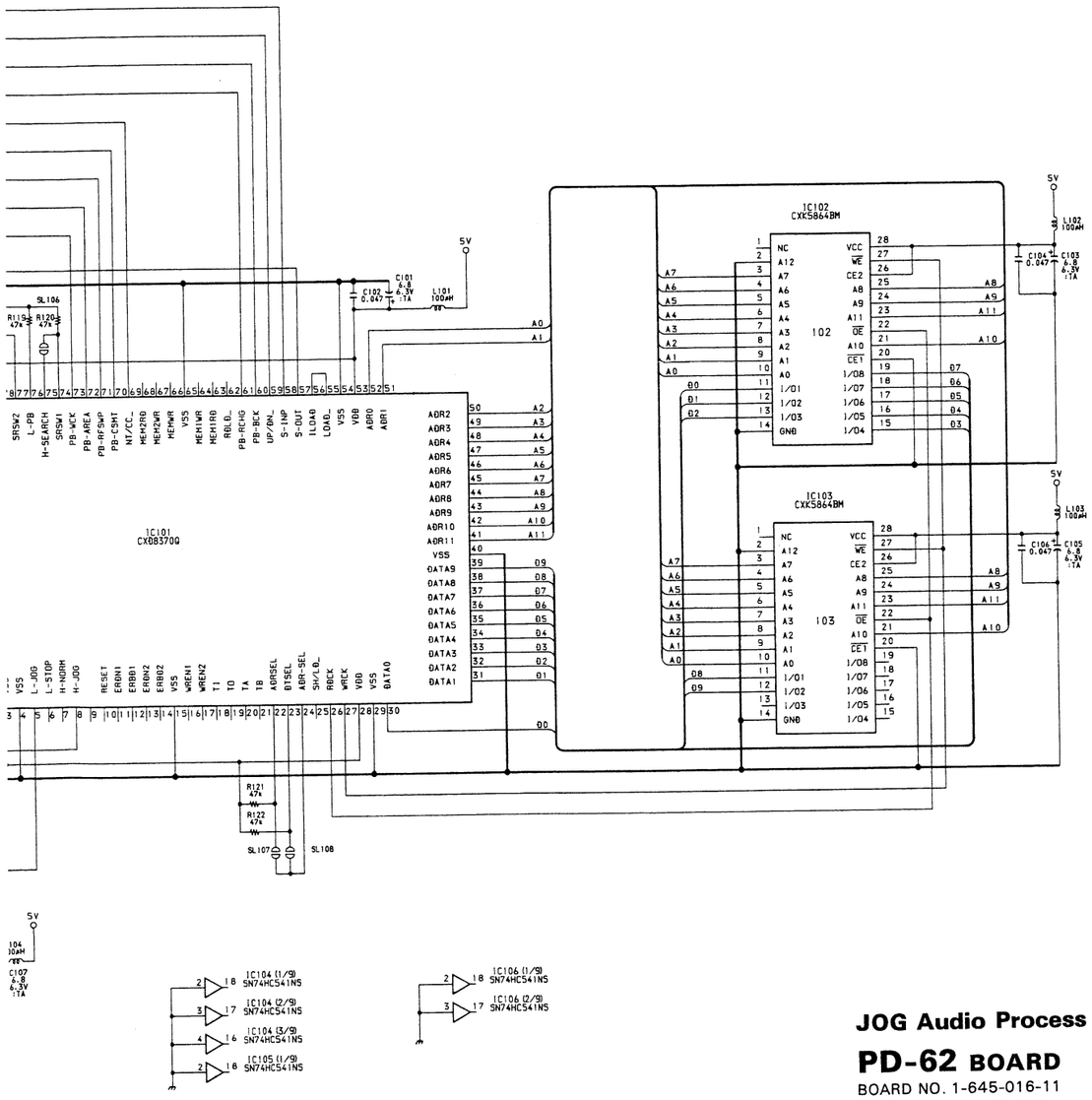

JOG Audio Process

PD-62 BOARD

BOARD NO. 1-645-016-11
EVO-9850 (J) : #10001—
EVO-9850 (UC) : #10031—

PD-62 BOARD

A Side

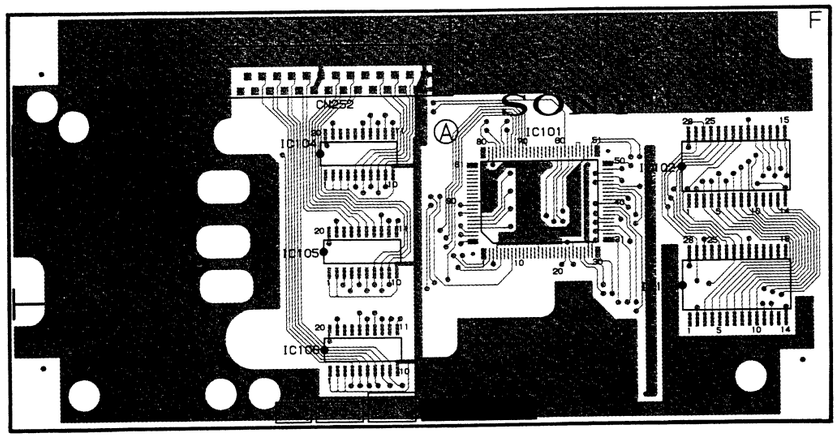

1-645-016-11 A SIDE

A Side is the same as Component Side

B Side

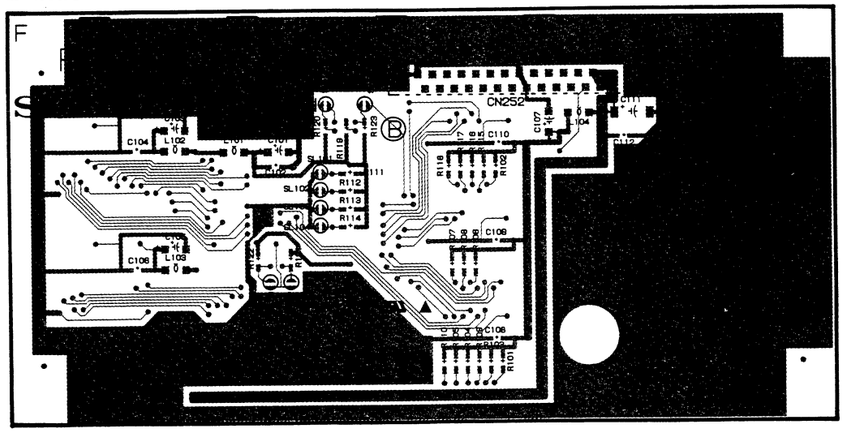

1-645-016-11 B SIDE

B Side is the same as Soldering Side

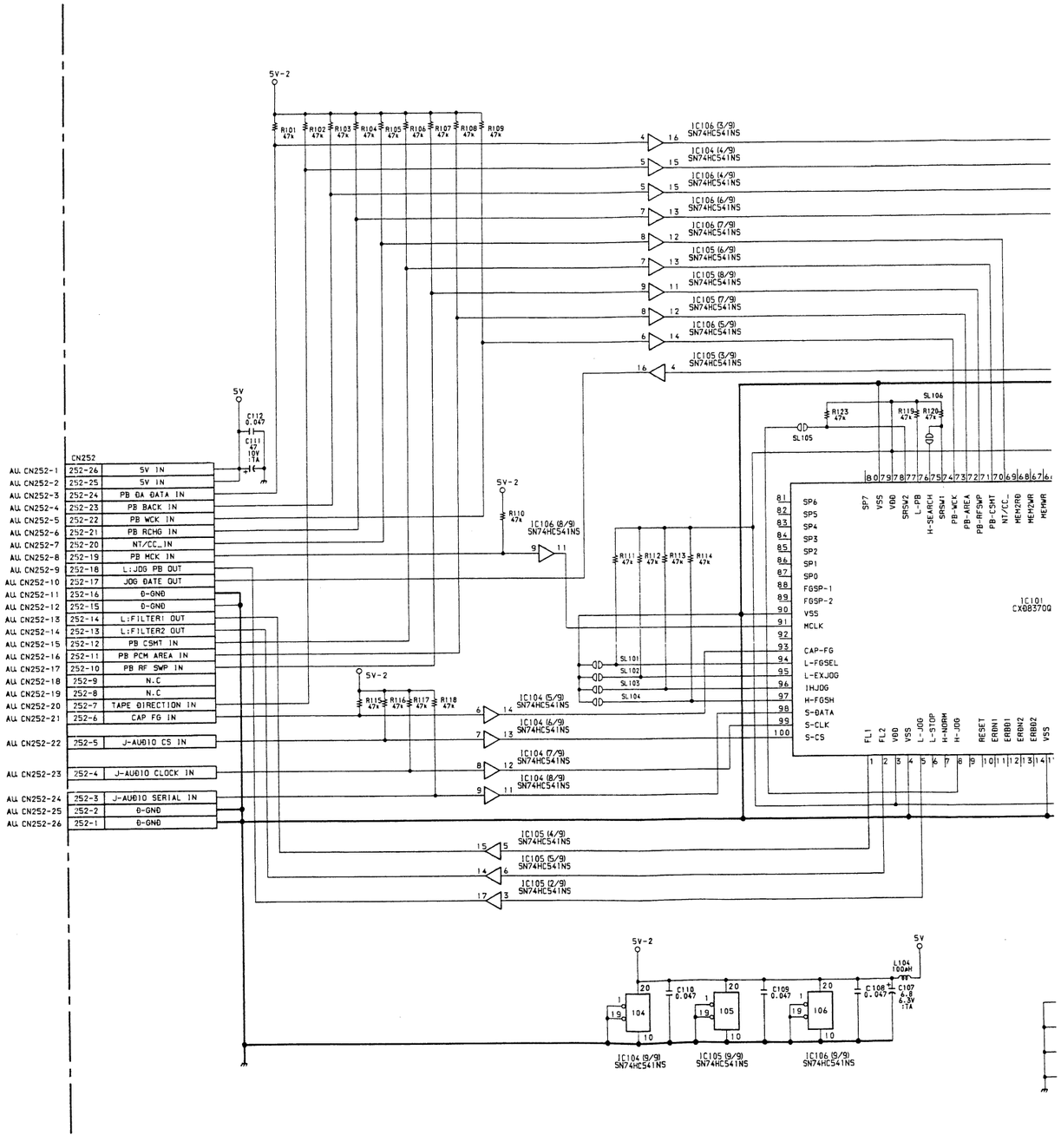

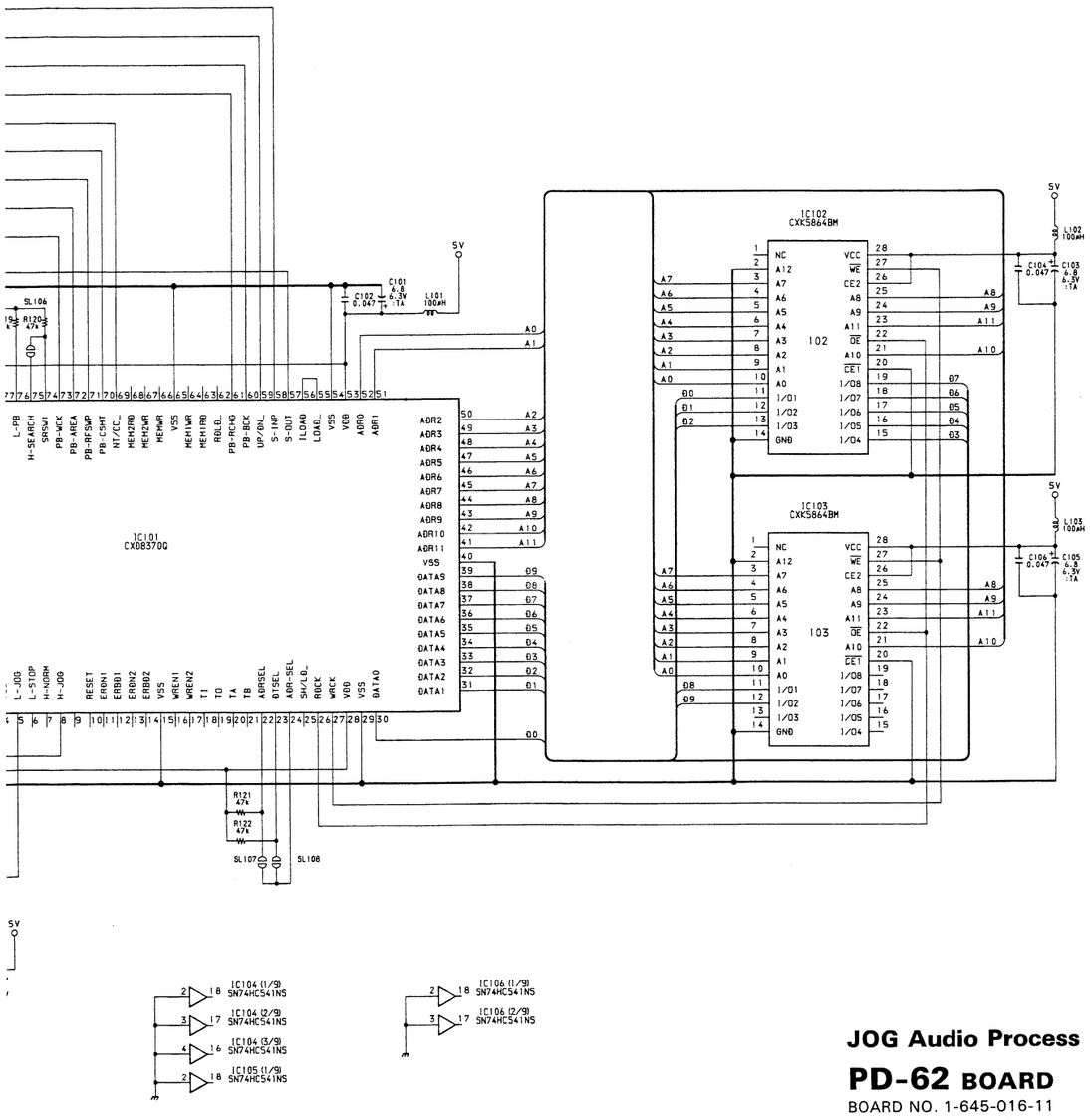

JOG Audio Process

PD-62 BOARD

BOARD NO. 1-645-016-11
EVO-9850 (J) : #10001—
EVO-9850 (UC) : #10031—

AA-57 (1-642-959-11)

CN201	D-3
CN202	C-3
CN203	B-3
CN204	A-3
CN205	E-3
CN206	A-2
CN207	C-2
CN208	C-2
CN209	E-2
CN210	E-3
D101	A-1 *
D102	A-2 *
D103	A-2 *
D104	A-2 *
D201	C-2 *
D202	C-2 *
D203	C-2 *
D204	C-2 *
D301	E-2 *
D302	E-2 *
D303	E-2 *
D304	E-2 *
D401	E-1 *
D402	E-1 *
D403	E-1 *
D404	E-1 *
D501	B-3 *
D601	A-3 *
D701	E-3 *
D801	C-3 *
IC101	B-2
IC102	C-2
IC103	A-2
IC201	C-2
IC202	D-2
IC203	C-2
IC301	D-2
IC302	D-2
IC401	D-1
IC601	B-3
IC801	C-3
PS1	B-2
PS2	B-2
Q1	A-2 *
Q2	A-2 *
Q51	C-2
Q52	C-2
Q501	C-3 *
Q502	B-3 *
Q503	B-3 *
Q601	A-3 *
Q602	A-3 *
Q603	A-3 *
Q701	E-3 *
Q702	D-3 *
Q703	D-3 *
Q801	D-3 *
Q802	C-3 *
Q803	C-3 *
T501	B-3
T601	A-3
T701	E-3
T801	C-3

AA-57 BOARD
A Side

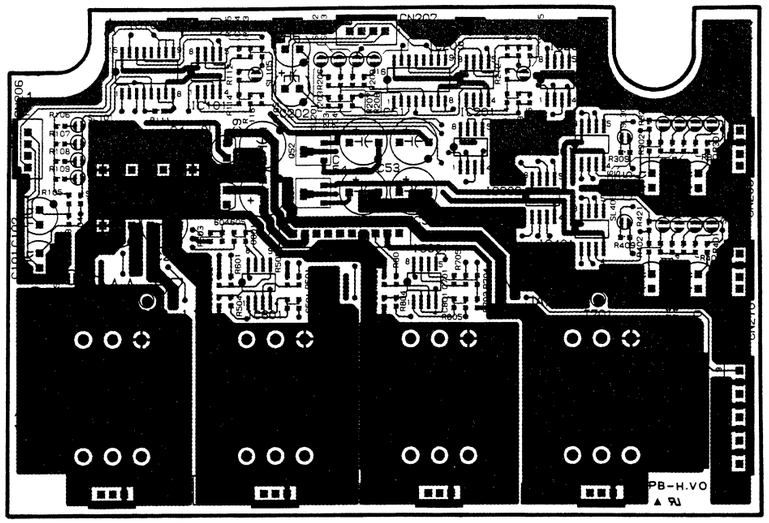

1-642-959-11 A SIDE

A Side is the same as Component Side

AA-57 BOARD
B Side

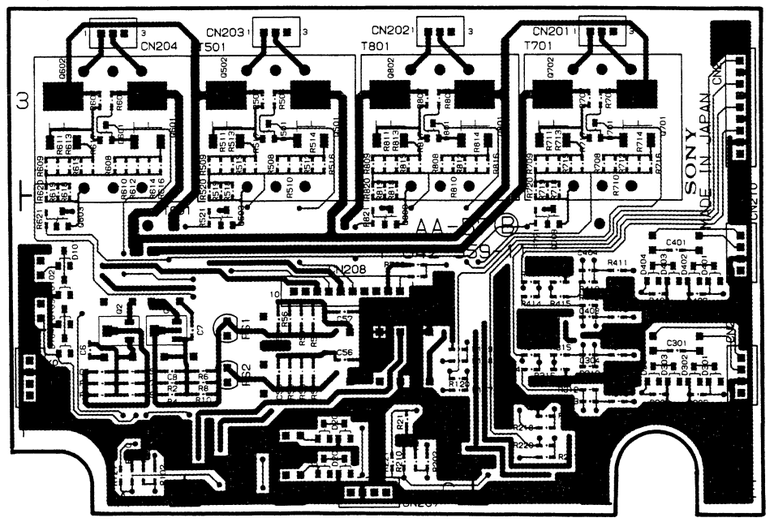

1-642-959-11 B SIDE

B Side is the same as Soldering Side

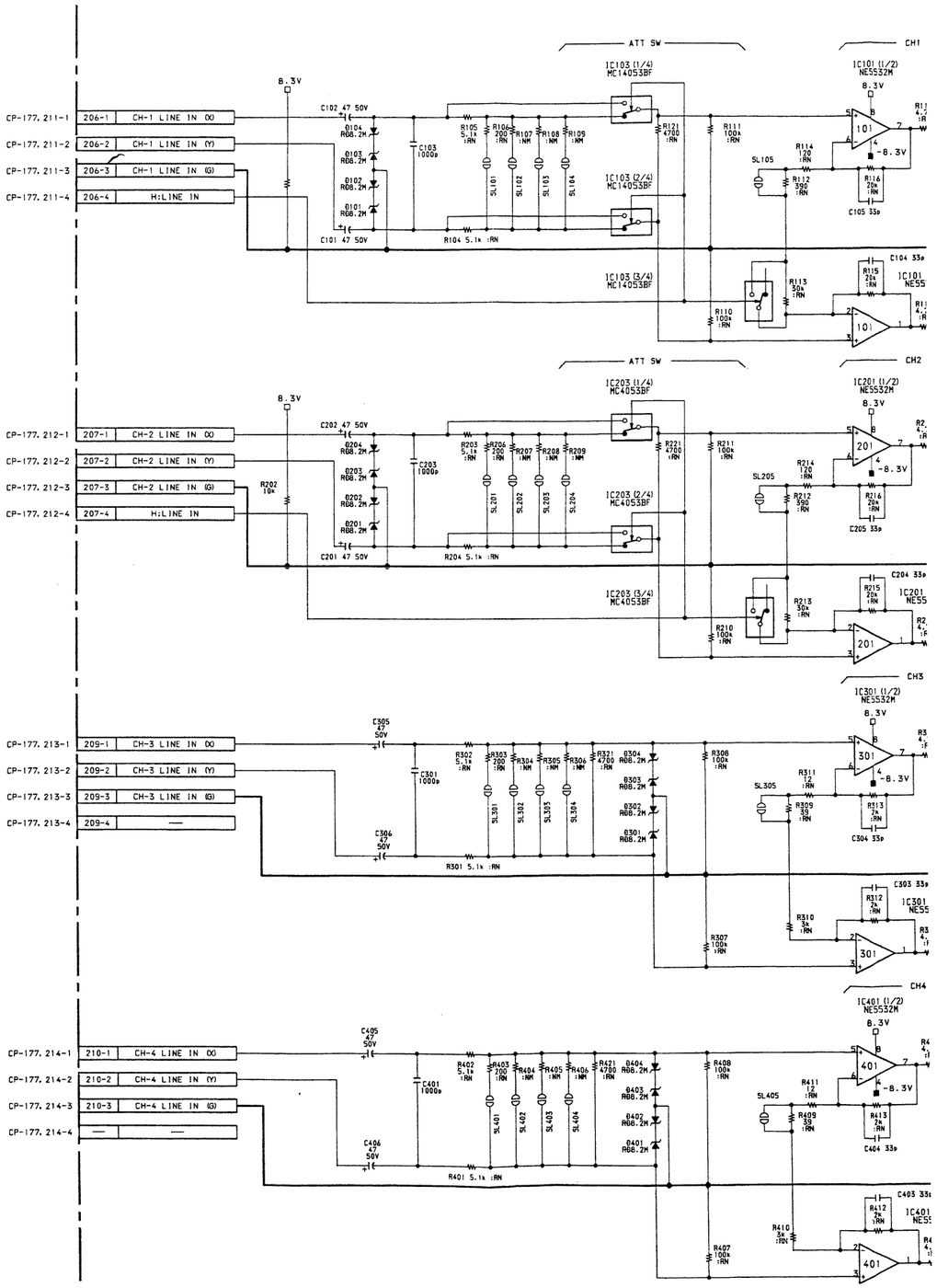

A | B | C | D | E | F | G | H

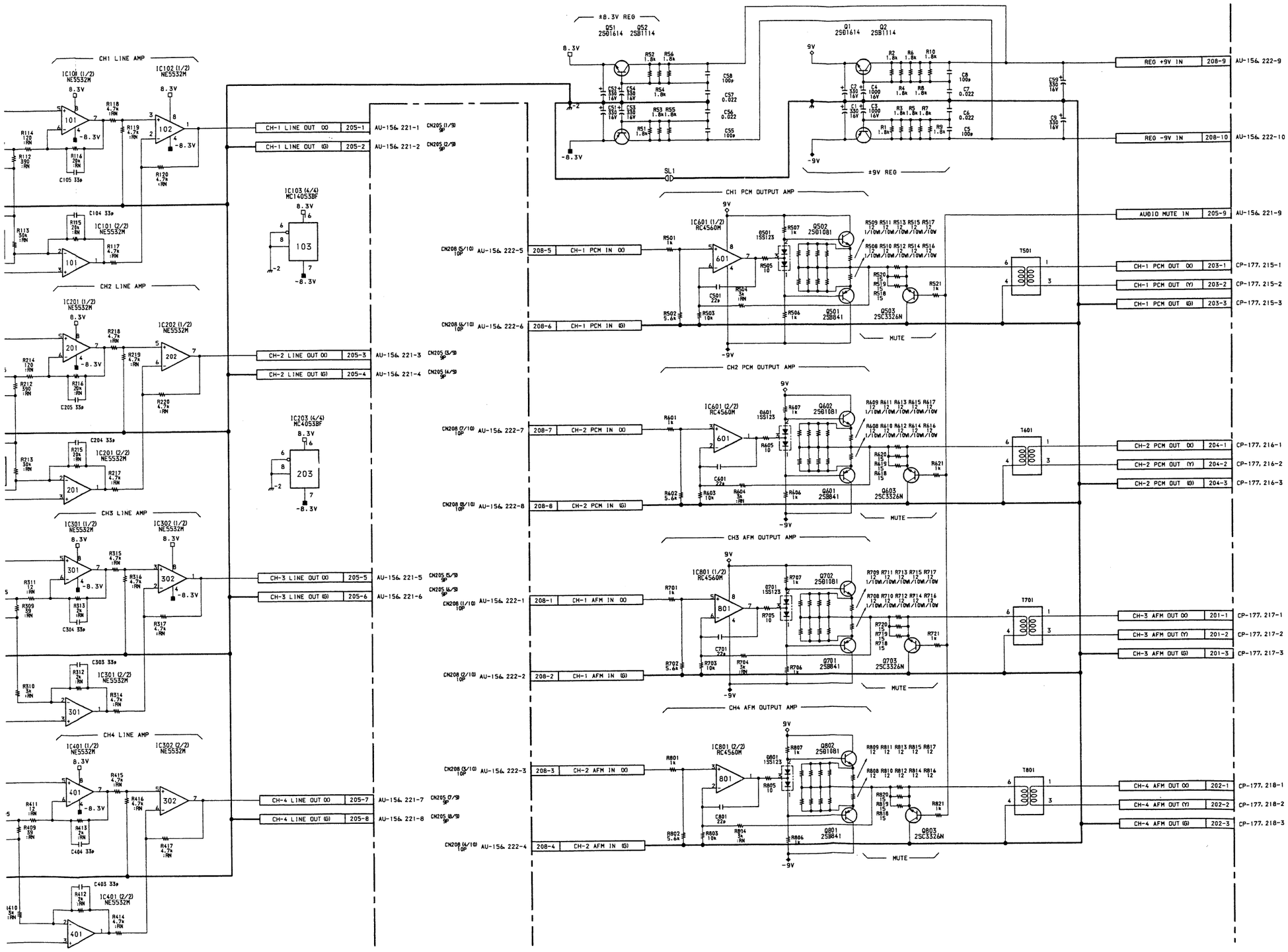

Audio Input/Output Amp

AA-57 BOARD

BOARD NO. 1-642-959-11
EVO-9850 (J) : # 10001—
EVO-9850 (UC) : # 10031—

AA-57 BOARD

A Side

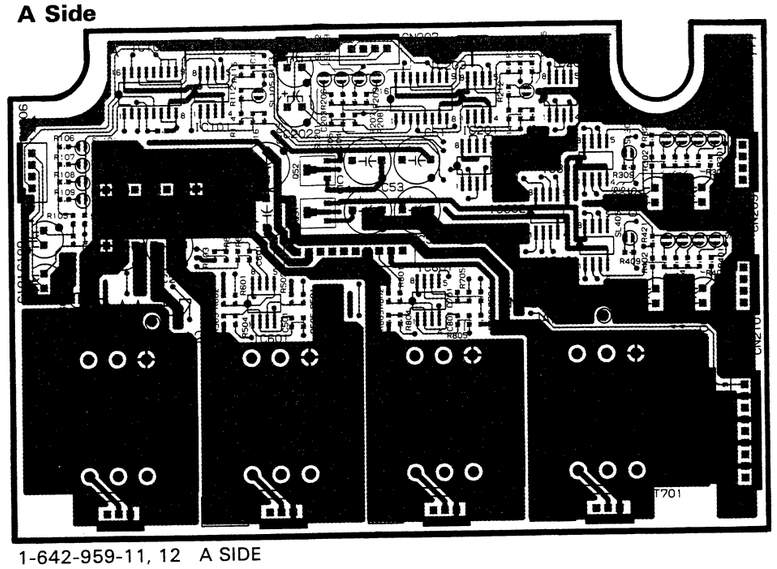

1-642-959-11, 12 A SIDE

A Side is the same as Component Side

AA-57 (1-642-959-11, 12)

CN201	D-3
CN202	D-3
CN203	C-3
CN204	A-3
CN205	E-3
CN206	A-1
CN207	C-1
CN208	C-2
CN209	E-2
CN210	E-3
D101	A-2 *
D102	A-2 *
D103	A-2 *
D104	A-2 *
D201	C-1 *
D202	C-1 *
D203	C-1 *
D204	C-1 *
D301	E-1 *
D302	E-1 *
D303	E-1 *
D304	E-1 *
D401	E-2 *
D402	E-2 *
D403	E-2 *
D404	E-2 *
D501	B-3 *
D601	A-3 *
D701	E-3 *
D801	C-3 *
IC101	B-1
IC102	D-1
IC103	A-1
IC201	C-1
IC202	D-1
IC203	C-1
IC301	D-1
IC302	D-1
IC401	D-2
IC601	B-2
IC801	C-2
PS1	B-2
PS2	B-2
Q1	A-2 *
Q2	A-2 *
Q51	C-2
Q52	C-1
Q501	C-3 *
Q502	B-3 *
Q503	B-2 *
Q601	A-3 *
Q602	A-3 *
Q603	A-2 *
Q701	E-3 *
Q702	D-3 *
Q703	D-2 *
Q801	D-3 *
Q802	C-3 *
Q803	C-2 *
T501	C-3
T601	A-3
T701	E-3
T801	D-3

* mark; B SIDE mount.

AA-57 BOARD

B Side

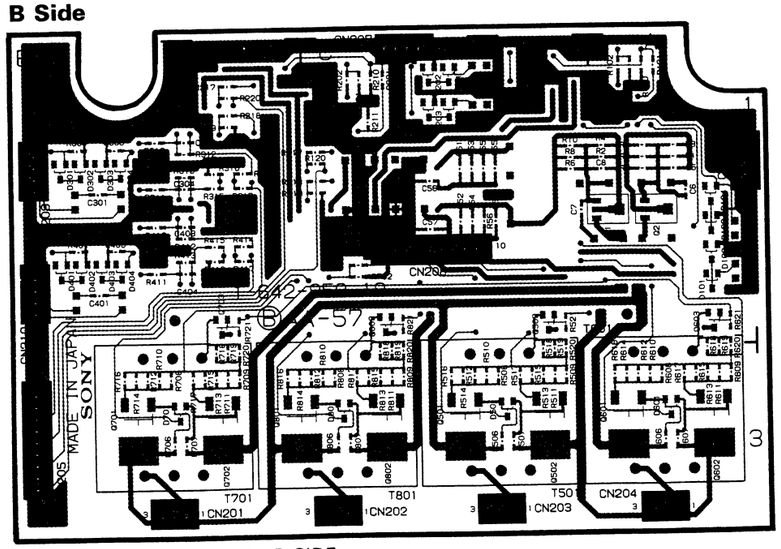

1-642-959-11, 12 B SIDE

B Side is the same as Soldering Side

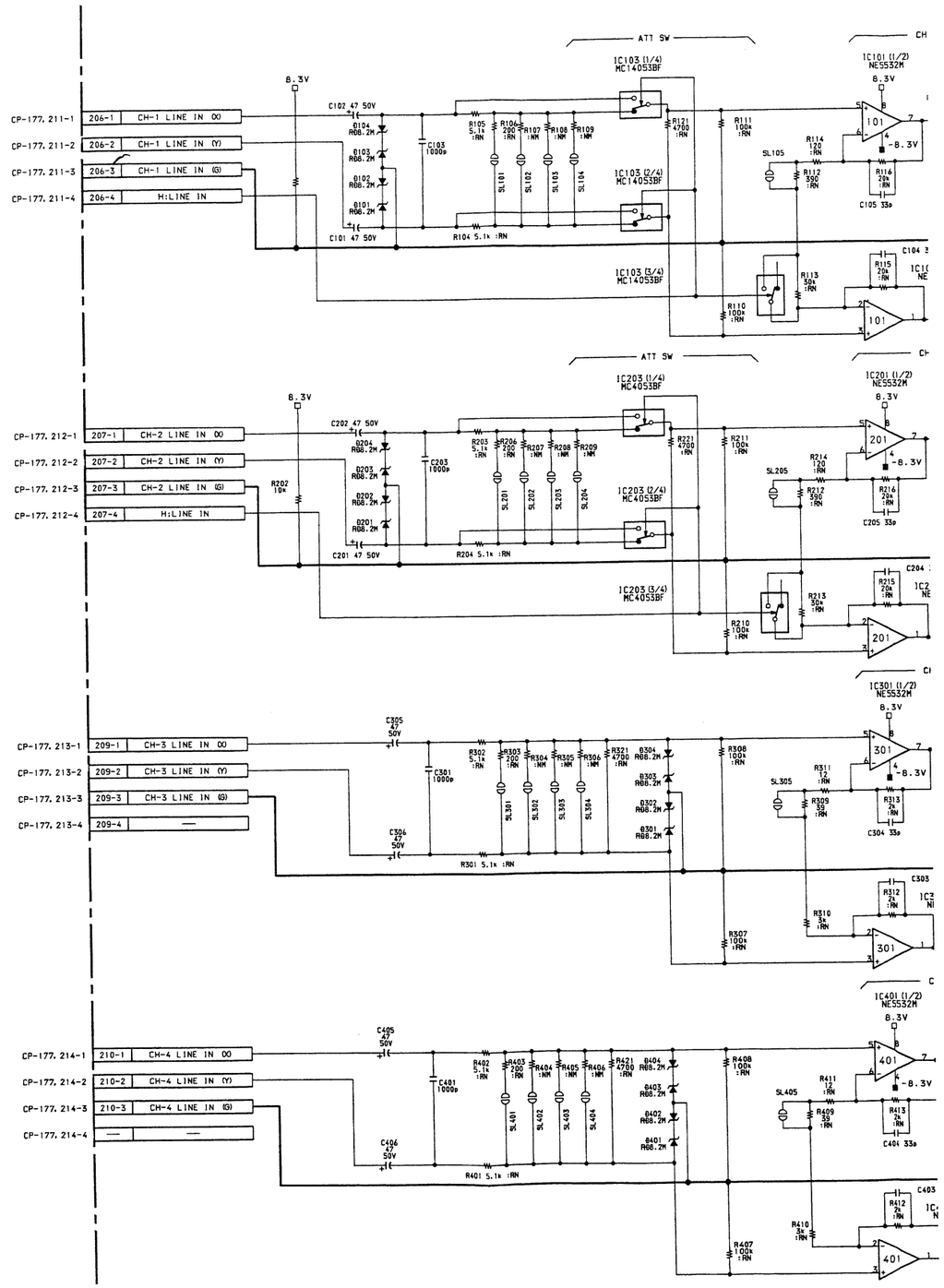

SST-2 (1-642-951-13)

CN5	A-5	D901	D-7	IC409	B-3 *	Q507	J-4 *	RV405	C-6
CN31	N-3	D902	G-5	IC410	D-4 *	Q508	M-4 *	RV410	C-5
CN51	P-6	D903	G-5	IC411	B-1	Q509	J-5 *	RV601	F-1
CN52	N-6	D904	E-7 *	IC412	C-3 *	Q510	J-5 *	RV602	F-2
CN53	Q-6	D905	E-6	IC501	M-2	Q511	J-2 *	RV603	G-5
CN54	R-6	D906	G-4 *	IC502	K-2	Q512	K-3 *	RV701	B-6
CN55	R-6	D907	G-4 *	IC503	K-3	Q513	J-3 *	RV702	B-2
CN61	J-4	D908	F-4 *	IC504	M-2 *	Q514	J-3 *	RV703	B-2
CN62	J-4	D909	C-7 *	IC601	E-2 *	Q601	E-2 *	RV802	F-6
CN63	J-1	D910	G-7	IC602	F-2	Q602	F-2 *	RV803	F-5
CN307	R-3	D1002	Q-9 *	IC603	C-4 *	Q603	F-3 *	RV804	F-5
CN308	D-5			IC604	G-1	Q604	E-3 *	RV805	F-6
CN309	R-2	E1	M-8	IC605	D-1 *	Q605	E-3 *	RV901	B-6
CN311	P-1	E2	R-1	IC606	F-2 *	Q701	B-2 *	RV1001	R-10
CN312	M-1	E3	P-4	IC607	G-5	Q702	B-2 *		
CN313	H-1	E401	D-5	IC701	B-2 *	Q703	A-4	S1	N-5
CN314	E-1	E501	L-2	IC702	C-4	Q704	B-4	S401	C-2
CN315	B-1	E601	G-1	IC703	B-6	Q705	B-4		
CN316	A-2			IC704	A-2 *	Q706	A-4 *	TP1	C-9
CN318	A-6	IC1	Q-4	IC705	B-6	Q707	A-5 *	TP2	P-8
CN319	A-4	IC2	P-5	IC706	C-7	Q708	B-5 *	TP3	P-8
CN320	A-3	IC3	Q-5	IC707	D-5 *	Q709	A-5 *	TP11	D-9
CN321	G-2	IC4	Q-2	IC801	G-6	Q710	A-7	TP12	D-9
CN322	J-2	IC5	Q-6	IC802	F-3	Q711	A-8	TP15	C-9
CN323	H-4	IC6	P-6	IC803	E-7 *	Q712	C-5 *	TP16	C-9
CN324	H-6	IC8	M-4	IC804	G-7 *	Q713	B-6 *	TP18	N-5
CN325	H-7	IC9	M-8	IC805	F-9	Q714	B-6 *	TP19	M-6
CN326	H-2	IC10	N-3	IC806	G-9	Q715	B-6 *	TP20	M-6
CN327	H-4	IC11	Q-8	IC809	G-7 *	Q716	B-6 *	TP26	C-10
CN328	H-6	IC13	K-7	IC901	F-4	Q717	A-6 *	TP27	C-10
CN329	R-1	IC14	Q-8	IC902	D-8 *	Q718	A-6 *	TP28	C-10
CN330	B-6	IC15	P-4	IC903	E-7 *	Q719	B-6 *	TP29	C-10
		IC16	B-9	IC904	D-7	Q720	B-4	TP30	P-2
COP1	P-5	IC17	P-4	IC905	C-7	Q801	E-8 *	TP201	P-9
COR1	N-5	IC18	M-5 *	IC1001	Q-9	Q802	G-2 *	TP401	D-4
CV100	P-3	IC19	N-4	IC1002	Q-10	Q803	G-2	TP402	D-4
		IC21	P-8	IC1003	Q-10	Q804	G-2	TP403	D-4
D1	M-4	IC22	E-9			Q809	F-7	TP404	F-6
D2	N-4 *	IC23	D-9	PS1	Q-1	Q810	G-9 *	TP405	G-5
D3	M-4 *	IC51	L-5	PS2	C-7	Q811	G-9 *	TP406	D-3
D5	C-6	IC52	Q-2	PS3	Q-1	Q812	E-5	TP501	K-3
D6	C-7	IC53	P-2	PS701	B-7	Q813	F-5	TP601	F-1
D10	L-6 *	IC54	Q-8	PS801	G-3	Q814	G-3	TP602	F-1
D11	L-5 *	IC100	Q-4			Q815	G-3	TP603	F-5
D201	J-8 *	IC101	P-2	Q1	P-4 *	Q816	G-3	TP604	G-5
D203	N-4 *	IC102	M-7	Q2	N-4 *	Q817	G-3	TP701	B-7
D204	N-9 *	IC103	L-6	Q3	M-4 *	Q818	F-3	TP702	B-7
D206	K-7 *	IC104	M-7	Q4	P-4 *	Q819	F-3	TP801	F-9
D401	C-5 *	IC105	P-2	Q6	P-2 *	Q901	F-4	TP802	F-8
D402	D-5 *	IC107	M-7	Q8	C-2	Q902	G-4	TP803	E-7
D403	C-6 *	IC201	P-9	Q15	Q-4 *	Q903	G-4	TP901	E-6
D404	C-5 *	IC202	P-8	Q16	J-5	Q904	E-6 *	TP902	E-5
D405	C-6 *	IC203	K-9	Q17	M-6 *	Q905	E-6	TP903	D-2
D406	D-5 *	IC204	K-8	Q18	M-5 *	Q906	D-7 *	TP904	F-9
D407	C-6 *	IC208	M-9	Q19	L-5 *	Q907	D-7 *	TP905	F-8
D408	D-6 *	IC209	M-9	Q20	L-5 *	Q908	F-9		
D409	B-3	IC210	L-9	Q21	Q-1	Q909	F-9	X1	R-7
D502	K-2 *	IC211	K-8	Q201	J-9 *	Q950	F-7	X2	R-4
D503	J-4 *	IC212	K-10	Q202	J-9 *	Q951	G-8 *	X3	B-10
D504	J-4 *	IC213	J-10	Q203	M-6 *	Q952	G-2 *	X201	N-9
D505	J-5 *	IC214	K-6	Q204	M-6 *	Q953	G-4 *	X401	B-3
D506	J-4 *	IC216	P-10	Q205	K-10 *	Q954	G-4 *	X501	M-3
D511	K-4 *	IC401	C-2 *	Q401	B-3	Q955	C-8 *	X502	K-1
D602	E-3	IC402	C-1	Q501	L-3 *			X701	C-5 *
D603	E-3	IC403	D-1	Q502	J-3	RV2	N-3		
D701	A-7	IC404	C-2 *	Q503	J-3	RV401	D-6	* mark; B SIDE mount.	
D802	G-3 *	IC405	C-2	Q504	K-4 *	RV402	D-5		
D810	G-8	IC406	D-4 *	Q505	K-4 *	RV403	C-6		
D811	G-9 *	IC408	C-1	Q506	J-4 *	RV404	C-5		

SST-2 BOARD
A Side

Serial No.: (J) 10001—10030
Serial No.: (UC) 10031—10070

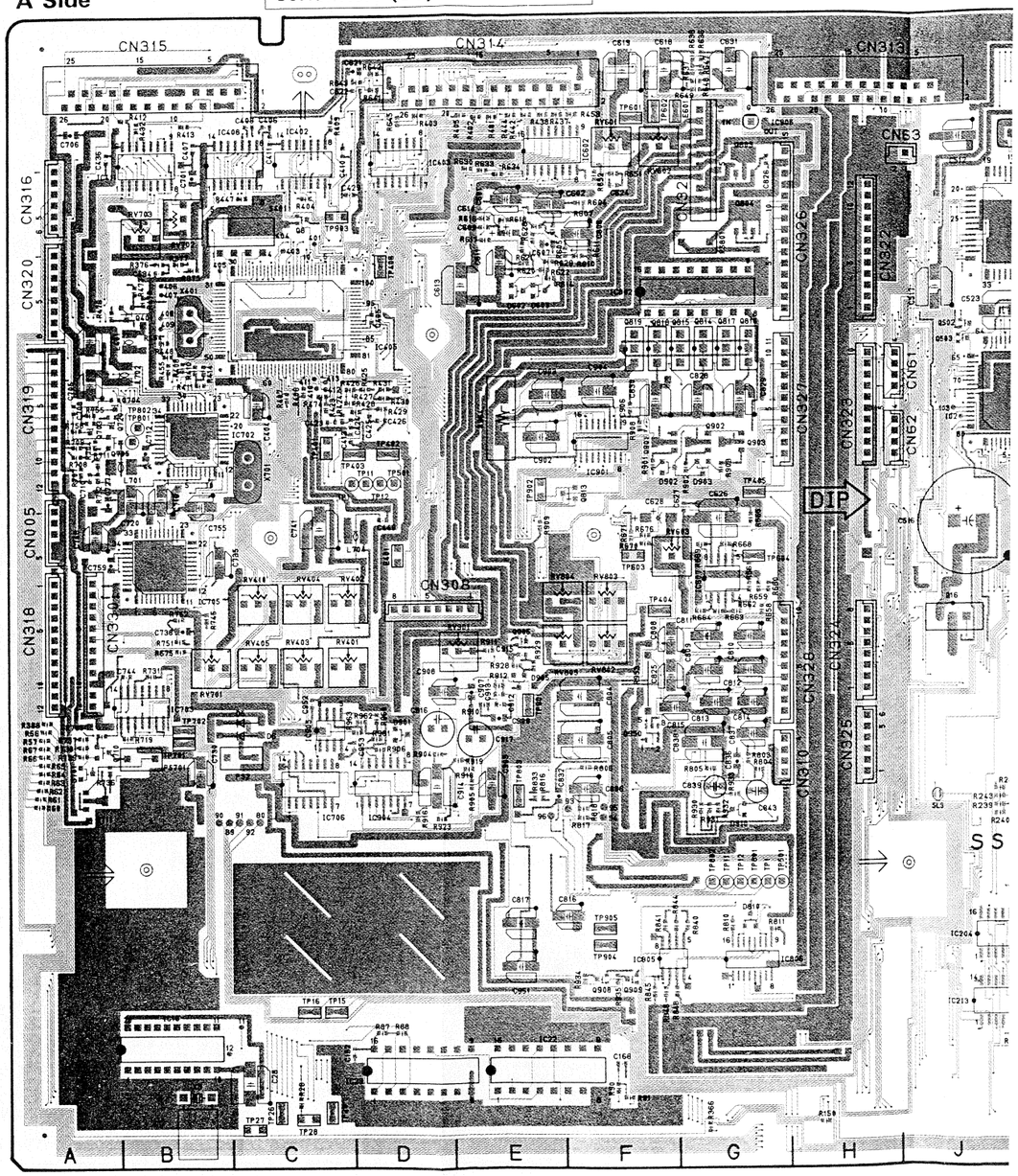

1-642-951-13 A SIDE

A Side is the same as Component Side

SST-2 BOARD
A Side

Serial No.: (J) 10001—10030
Serial No.: (UC) 10031—10070

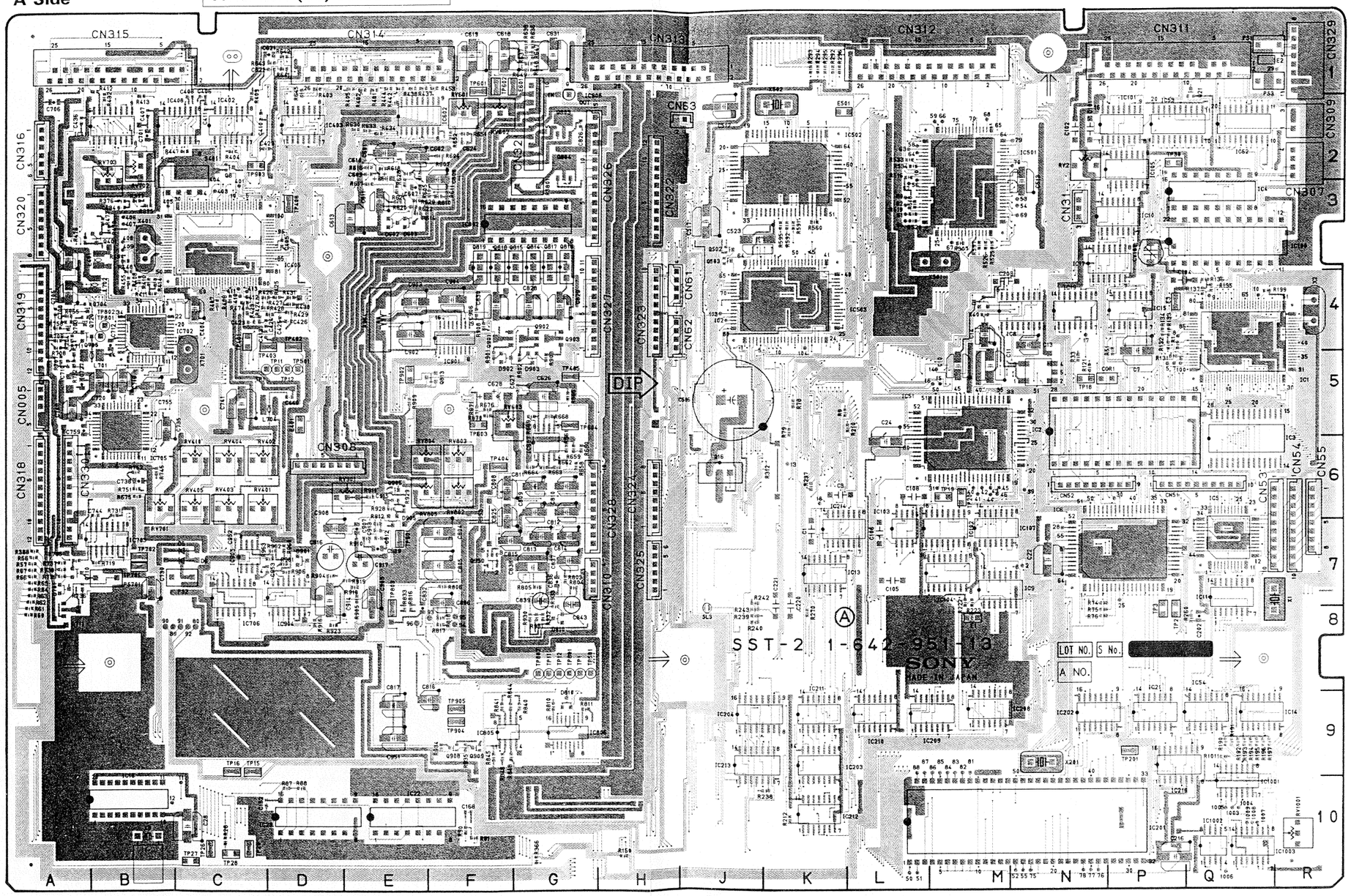

1-642-951-13 A SIDE

A Side is the same as Component Side

RV405	C-6
RV410	C-5
RV601	F-1
RV602	F-2
RV603	G-5
RV701	B-6
RV702	B-2
RV703	B-2
RV802	F-6
RV803	F-5
RV804	F-5
RV805	F-6
RV901	B-6
RV1001	R-10
S1	N-5
S401	C-2
TP1	C-9
TP2	P-8
TP3	P-8
TP11	D-9
TP12	D-9
TP15	C-9
TP16	C-9
TP18	N-5
TP19	M-6
TP20	M-6
TP26	C-10
TP27	C-10
TP28	C-10
TP29	C-10
TP30	P-2
TP201	P-9
TP401	D-4
TP402	D-4
TP403	D-4
TP404	F-6
TP405	G-5
TP406	D-3
TP501	K-3
TP601	F-1
TP602	F-1
TP603	F-5
TP604	G-5
TP701	B-7
TP702	B-7
TP801	F-9
TP802	F-8
TP803	E-7
TP901	E-6
TP902	E-5
TP903	D-2
TP904	F-9
TP905	F-8
X1	R-7
X2	R-4
X3	B-10
X201	N-9
X401	B-3
X501	M-3
X502	K-1
X701	C-5 *

* mark ; B SIDE mount.

SST-2 (1-642-951-13)

CN5	A-5	D901	D-7	IC409	B-3 *	Q507	J-4 *	RV405	C-6
CN31	N-3	D902	G-5	IC410	D-4 *	Q508	M-4 *	RV410	C-5
CN51	P-6	D903	G-5	IC411	B-1	Q509	J-5 *	RV601	F-1
CN52	N-6	D904	E-7 *	IC412	C-3 *	Q510	J-5 *	RV602	F-2
CN53	Q-6	D905	E-6	IC501	M-2	Q511	J-2 *	RV603	G-5
CN54	R-6	D906	G-4 *	IC502	K-2	Q512	K-3 *	RV701	B-6
CN55	R-6	D907	G-4 *	IC503	K-3	Q513	J-3 *	RV702	B-2
CN61	J-4	D908	F-4 *	IC504	M-2 *	Q514	J-3 *	RV703	B-2
CN62	J-4	D909	C-7 *	IC601	E-2 *	Q601	E-2 *	RV802	F-6
CN63	J-1	D910	G-7	IC602	F-2	Q602	F-2 *	RV803	F-5
CN307	R-3	D1002	Q-9 *	IC603	C-4 *	Q603	F-3 *	RV804	F-5
CN308	D-5			IC604	G-1	Q604	E-3 *	RV805	F-6
CN309	R-2	E1	M-8	IC605	D-1 *	Q605	E-3 *	RV901	B-6
CN311	P-1	E2	R-1	IC606	F-2 *	Q701	B-2 *	RV1001	R-10
CN312	M-1	E3	P-4	IC607	G-5	Q702	B-2 *		
CN313	H-1	E401	D-5	IC701	B-2 *	Q703	A-4	S1	N-5
CN314	E-1	E501	L-2	IC702	C-4	Q704	B-4	S401	C-2
CN315	B-1	E601	G-1	IC703	B-6	Q705	B-4		
CN316	A-2			IC704	A-2 *	Q706	A-4 *	TP1	C-9
CN318	A-6	IC1	Q-4	IC705	B-6	Q707	A-5 *	TP2	P-8
CN319	A-4	IC2	P-5	IC706	C-7	Q708	B-5 *	TP3	P-8
CN320	A-3	IC3	Q-5	IC707	D-5 *	Q709	A-5 *	TP11	D-9
CN321	G-2	IC4	Q-2	IC801	G-6	Q710	A-7	TP12	D-9
CN322	J-2	IC5	Q-6	IC802	F-3	Q711	A-8	TP15	C-9
CN323	H-4	IC6	P-6	IC803	E-7 *	Q712	C-5 *	TP16	C-9
CN324	H-6	IC8	M-4	IC804	G-7 *	Q713	B-6 *	TP18	N-5
CN325	H-7	IC9	M-8	IC805	F-9	Q714	B-6 *	TP19	M-6
CN326	H-2	IC10	N-3	IC806	G-9	Q715	B-6 *	TP20	M-6
CN327	H-4	IC11	Q-8	IC809	G-7 *	Q716	B-6 *	TP26	C-10
CN328	H-6	IC13	K-7	IC901	F-4	Q717	A-6 *	TP27	C-10
CN329	R-1	IC14	Q-8	IC902	D-8 *	Q718	A-6 *	TP28	C-10
CN330	B-6	IC15	P-4	IC903	E-7 *	Q719	B-6 *	TP29	C-10
		IC16	B-9	IC904	D-7	Q720	B-4	TP30	P-2
COP1	P-5	IC17	P-4	IC905	C-7	Q801	E-8 *	TP201	P-9
COR1	N-5	IC18	M-5 *	IC1001	Q-9	Q802	G-2 *	TP401	D-4
CV100	P-3	IC19	N-4	IC1002	Q-10	Q803	G-2	TP402	D-4
		IC21	P-8	IC1003	Q-10	Q804	G-2	TP403	D-4
D1	M-4	IC22	E-9			Q809	F-7	TP404	F-6
D2	N-4 *	IC23	D-9	PS1	Q-1	Q810	G-9 *	TP405	G-5
D3	M-4 *	IC51	L-5	PS2	C-7	Q811	G-9 *	TP406	D-3
D5	C-6	IC52	Q-2	PS3	Q-1	Q812	E-5	TP501	K-3
D6	C-7	IC53	P-2	PS701	B-7	Q813	F-5	TP601	F-1
D10	L-6 *	IC54	Q-8	PS801	G-3	Q814	G-3	TP602	F-1
D11	L-5 *	IC100	Q-4			Q815	G-3	TP603	F-5
D201	J-8 *	IC101	P-2	Q1	P-4 *	Q816	G-3	TP604	G-5
D203	N-4 *	IC102	M-7	Q2	N-4 *	Q817	G-3	TP701	B-7
D204	N-9 *	IC103	L-6	Q3	M-4 *	Q818	F-3	TP702	B-7
D206	K-7 *	IC104	M-7	Q4	P-4 *	Q819	F-3	TP801	F-9
D401	C-5 *	IC105	P-2	Q6	P-2 *	Q901	F-4	TP802	F-8
D402	D-5 *	IC107	M-7	Q8	C-2	Q902	G-4	TP803	E-7
D403	C-6 *	IC201	P-9	Q15	Q-4 *	Q903	G-4	TP901	E-6
D404	C-5 *	IC202	P-8	Q16	J-5	Q904	E-6 *	TP902	E-5
D405	C-6 *	IC203	K-9	Q17	M-6 *	Q905	E-6	TP903	D-2
D406	D-5 *	IC204	K-8	Q18	M-5 *	Q906	D-7 *	TP904	F-9
D407	C-6 *	IC208	M-9	Q19	L-5 *	Q907	D-7 *	TP905	F-8
D408	D-6 *	IC209	M-9	Q20	L-5 *	Q908	F-9		
D409	B-3	IC210	L-9	Q21	Q-1	Q909	F-9	X1	R-7
D502	K-2 *	IC211	K-8	Q201	J-9 *	Q950	F-7	X2	R-4
D503	J-4 *	IC212	K-10	Q202	J-9 *	Q951	G-8 *	X3	B-10
D504	J-4 *	IC213	J-10	Q203	M-6 *	Q952	G-2 *	X201	N-9
D505	J-5 *	IC214	K-6	Q204	M-6 *	Q953	G-4 *	X401	B-3
D506	J-4 *	IC216	P-10	Q205	K-10 *	Q954	G-4 *	X501	M-3
D511	K-4 *	IC401	C-2 *	Q401	B-3	Q955	C-8 *	X502	K-1
D602	E-3	IC402	C-1	Q501	L-3 *			X701	C-5 *
D603	E-3	IC403	D-1	Q502	J-3	RV2	N-3		
D701	A-7	IC404	C-2 *	Q503	J-3	RV401	D-6	* mark; B SIDE mount.	
D802	G-3 *	IC405	C-2	Q504	K-4 *	RV402	D-5		
D810	G-8	IC406	D-4 *	Q505	K-4 *	RV403	C-6		
D811	G-9 *	IC408	C-1	Q506	J-4 *	RV404	C-5		

Serial No.: (J) 10001—10030
Serial No.: (UC) 10031—10070

SST-2 BOARD

A Side

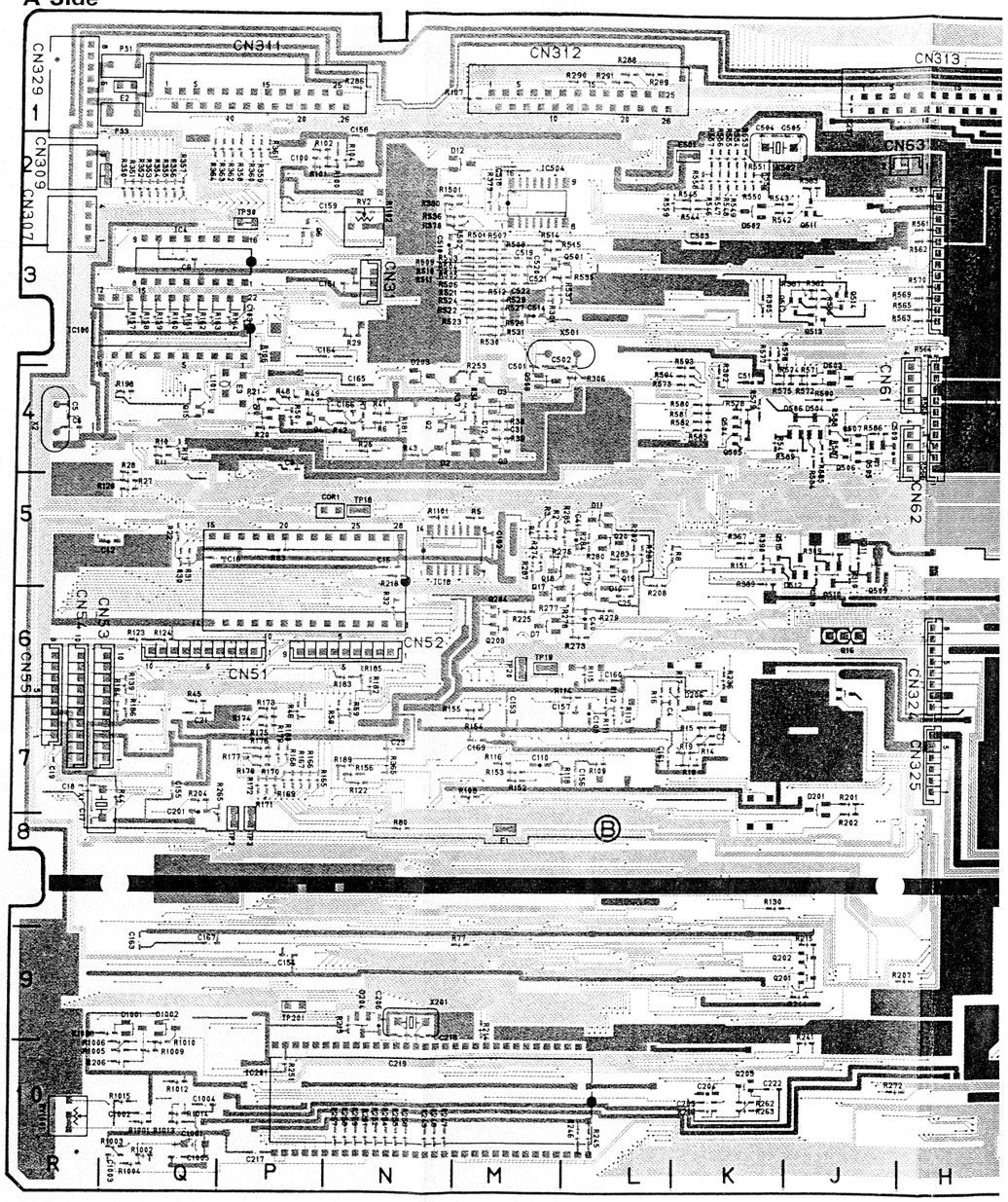

1-642-951-13 A SIDE

A Side is the same as Component Side

Serial No.: (J) 10001—10030
Serial No.: (UC) 10031—10070

SST-2 BOARD

A Side

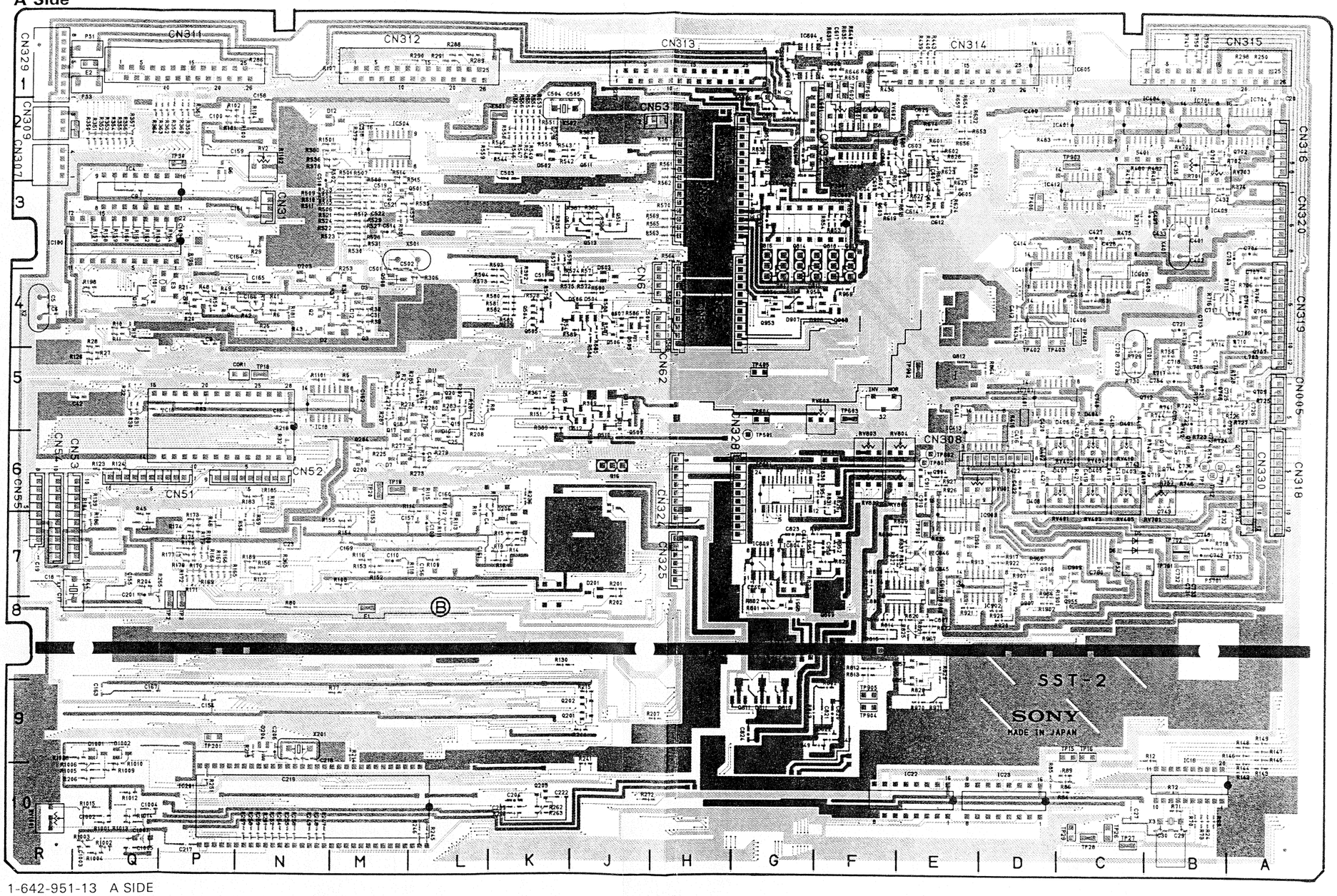

1-642-951-13 A SIDE

A Side is the same as Component Side

RV405	C-6
RV410	C-5
RV601	F-1
RV602	F-2
RV603	G-5
RV701	B-6
RV702	B-2
RV703	B-2
RV802	F-6
RV803	F-5
RV804	F-5
RV805	F-6
RV901	B-6
RV1001	R-10
S1	N-5
S401	C-2
TP1	C-9
TP2	P-8
TP3	P-8
TP11	D-9
TP12	D-9
TP15	C-9
TP16	C-9
TP18	N-5
TP19	M-6
TP20	M-6
TP26	C-10
TP27	C-10
TP28	C-10
TP29	C-10
TP30	P-2
TP201	P-9
TP401	D-4
TP402	D-4
TP403	D-4
TP404	F-6
TP405	G-5
TP406	D-3
TP501	K-3
TP601	F-1
TP602	F-1
TP603	F-5
TP604	G-5
TP701	B-7
TP702	B-7
TP801	F-9
TP802	F-8
TP803	E-7
TP901	E-6
TP902	E-5
TP903	D-2
TP904	F-9
TP905	F-8
X1	R-7
X2	R-4
X3	B-10
X201	N-9
X401	B-3
X501	M-3
X502	K-1
X701	C-5 *

* mark; B SIDE mount.

SST-2 (1-642-951-14)

CN5	A-5	D810	G-9	IC404	B-1 *	Q501	M-3 *	Q957	E-8 *	X401	B-3
CN31	N-3	D811	G-9 *	IC405	D-3	Q502	J-3	Q958	J-6 *	X501	W-4
CN51	P-6	D901	D-7	IC406	C-4 *	Q503	J-3			X502	K-1
CN52	N-6	D902	F-5	IC408	C-2	Q504	K-4 *	RV2	N-2	X701	C-5 *
CN53	Q-6	D903	G-5	IC409	B-3 *	Q505	K-4 *	RV401	C-6		
CN54	R-6	D904	E-7 *	IC410	D-4 *	Q506	J-4 *	RV402	C-6		
CN55	R-6	D905	E-6	IC411	A-2	Q507	J-4 *	RV403	C-6		
CN61	J-4	D906	G-4 *	IC412	D-3 *	Q508	M-4 *	RV404	C-6		
CN62	J-4	D907	G-4 *	IC413	E-5 *	Q509	J-6 *	RV405	C-6		
CN63	H-2	D908	F-4 *	IC501	N-2	Q510	J-6 *	RV410	C-6		
CN307	R-3	D909	C-7 *	IC502	K-2	Q511	J-2 *	RV601	F-2		
CN308	D-6	D910	G-8	IC503	L-4	Q512	K-3 *	RV602	F-2		
CN309	R-2	D1001	Q-9 *	IC504	M-2 *	Q513	J-3 *	RV603	F-5		
CN311	P-1	D1002	Q-9 *	IC601	E-2 *	Q514	J-3 *	RV701	B-7		
CN312	L-1	D1501	K-3	IC602	F-2	Q515	K-5 *	RV702	B-3		
CN313	H-1			IC603	C-4 *	Q602	F-2 *	RV703	B-2		
CN314	E-1	E1	M-8	IC604	G-1 *	Q603	F-3 *	RV802	F-6		
CN315	B-1	E2	Q-1	IC605	C-1 *	Q604	E-3 *	RV803	F-6		
CN316	A-2	E3	R-2	IC606	F-2 *	Q605	E-3 *	RV804	E-6		
CN318	A-6	E401	D-5	IC607	G-6	Q701	B-2 *	RV805	E-6		
CN319	A-4	E501	K-2	IC701	B-2 *	Q702	A-2 *	RV901	D-6		
CN320	A-3	E601	G-1	IC702	C-4	Q703	A-4	RV1001	R-10		
CN321	G-2			IC703	B-7	Q704	B-4				
CN322	H-3	IC1	R-5	IC704	A-2 *	Q705	B-4	S1	N-5		
CN323	H-4	IC2	N-5	IC705	B-6	Q706	A-4 *	S2	N-5		
CN324	H-6	IC3	R-5	IC706	C-8	Q707	A-4 *	S401	C-2		
CN325	H-7	IC4	Q-3	IC707	D-5 *	Q708	B-5 *				
CN326	H-3	IC5	Q-6	IC801	G-6 *	Q709	A-5 *	TP1	B-6		
CN327	H-4	IC6	N-6	IC802	F-3	Q710	A-7	TP2	P-8		
CN328	H-7	IC8	M-4	IC803	F-7 *	Q711	A-8	TP3	P-8		
CN329	R-1	IC9	N-7	IC804	G-7 *	Q712	B-5 *	TP11	B-6		
CN330	A-6	IC10	P-3	IC805	F-9	Q713	B-6 *	TP12	B-6		
		IC11	Q-7	IC806	G-9	Q714	B-6 *	TP15	C-9		
COP1	N-5	IC13	L-7	IC809	G-7 *	Q715	B-6 *	TP16	C-9		
COR1	N-5	IC14	R-9	IC901	F-5	Q716	B-6 *	TP18	N-5		
CV100	P-3	IC15	P-4	IC902	D-8 *	Q717	A-6 *	TP19	M-6		
		IC16	B-9	IC903	D-7 *	Q718	A-6 *	TP20	M-6		
D1	M-4	IC17	N-3	IC904	D-8	Q719	B-6 *	TP26	C-10		
D2	N-4 *	IC18	N-5 *	IC905	C-7	Q720	B-4	TP27	C-10		
D3	M-4 *	IC19	N-4	IC906	G-1	Q802	G-2 *	TP28	C-10		
D5	C-7	IC21	P-8	IC1001	Q-10	Q803	G-2	TP29	C-10		
D6	C-7	IC22	E-10	IC1002	Q-10	Q804	G-3	TP30	P-2		
D7	M6 *	IC23	C-10	IC1003	R-10	Q809	F-8 *	TP201	P-9		
D10	L-6 *	IC51	L-5			Q810	G-9 *	TP401	C-4		
D11	L-5 *	IC52	Q-2	PS1	Q-1	Q811	G-9 *	TP402	D-4		
D12	N2 *	IC53	P-2	PS2	C-7	Q812	E-5 *	TP403	D-4		
D201	J-7 *	IC54	Q-8	PS3	Q-1	Q813	F-5	TP404	F-6		
D203	N-4 *	IC100	R-3	PS701	B-7	Q814	G-3	TP405	G-5		
D204	N-9 *	IC101	P-2	PS801	G-2	Q815	G-3	TP406	D-3		
D206	K-7 *	IC102	M-7			Q816	G-3	TP501	G-5		
D401	C-5 *	IC103	L-6	Q1	P-4 *	Q817	G-3	TP601	F-1		
D402	D-6 *	IC104	M-7	Q2	N-4 *	Q818	F-3	TP602	F-1		
D403	C-6 *	IC105	P-2	Q3	M-4 *	Q819	F-3	TP603	F-5		
D404	C-5 *	IC107	N-7	Q4	P-4 *	Q901	F-4	TP604	G-5		
D405	C-6 *	IC201	P-10	Q6	P-2 *	Q902	G-4	TP701	B-7		
D406	C-5 *	IC202	P-9	Q8	C-2	Q903	G-4	TP702	B-7		
D407	C-6 *	IC203	L-9	Q15	Q-4 *	Q904	E-6 *	TP801	E-6		
D408	D-6 *	IC204	J-9	Q16	J-6	Q905	E-6	TP802	E-6		
D502	K-2 *	IC208	N-9	Q17	M-6 *	Q906	D-7 *	TP803	E-7		
D503	J-4 *	IC209	M-9	Q18	M-5 *	Q907	D-8 *	TP901	E-7		
D504	J-4 *	IC210	L-9	Q19	L-5 *	Q908	F-9	TP902	E-5		
D505	J-4 *	IC211	K-8	Q20	L-5 *	Q909	F-9	TP903	C-2		
D506	J-4 *	IC212	K-10	Q21	Q-1	Q950	F-7	TP904	F-9		
D512	J-5 *	IC213	J-9	Q201	J-9 *	Q951	G-8 *	TP905	F-9		
D602	E-3	IC214	K-6	Q202	J-9 *	Q952	G-2 *				
D603	E-3	IC216	P-10	Q203	M-6 *	Q953	G-4 *	X1	R-7		
D604	F3 *	IC401	C-2 *	Q204	M-6 *	Q954	G-4 *	X2	R-4		
D701	A-7	IC402	C-2	Q205	K-10 *	Q955	C-8 *	X3	B-10		
D802	G-3 *	IC403	D-2	Q401	B-3	Q956	E-9 *	X201	N-9		

* mark ; B SIDE mount.

Serial No.: (J) 10031 and higher
Serial No.: (UC) 10071 and higher

SST-2 BOARD
A Side

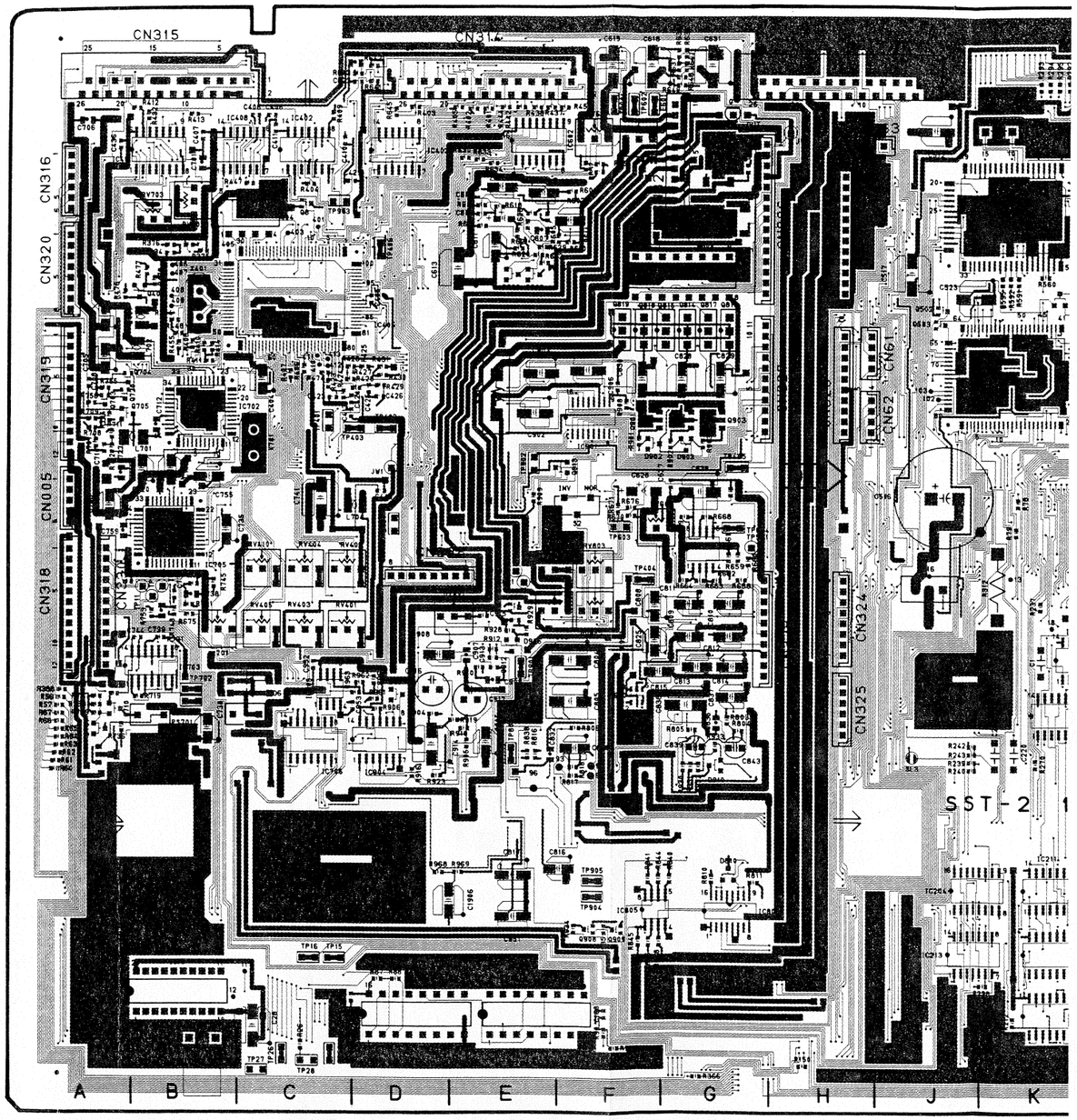

1-642-951-14 A SIDE

A Side is the same as Component Side

13-44 (b)

SST-2 SST-2

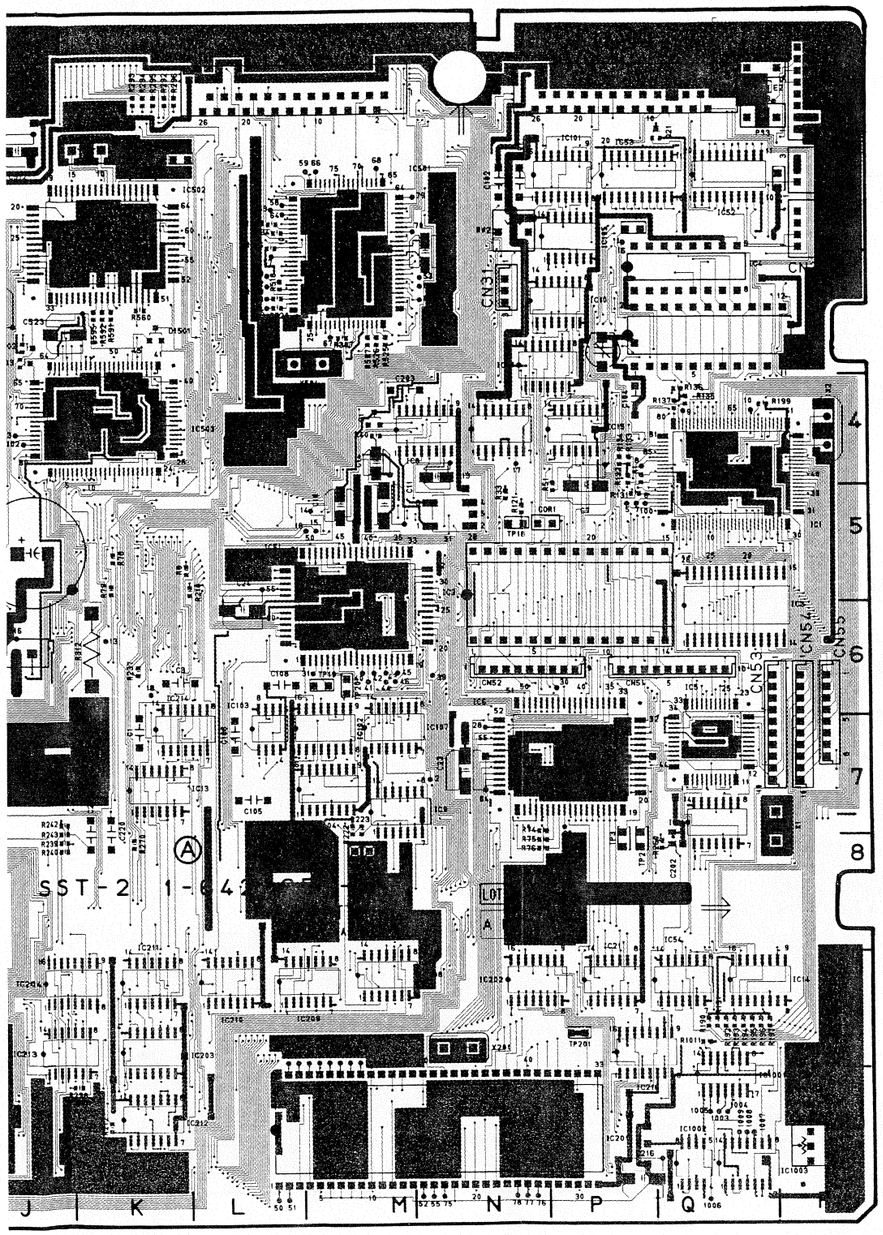

13-44 (b)

SST-2 SST-2

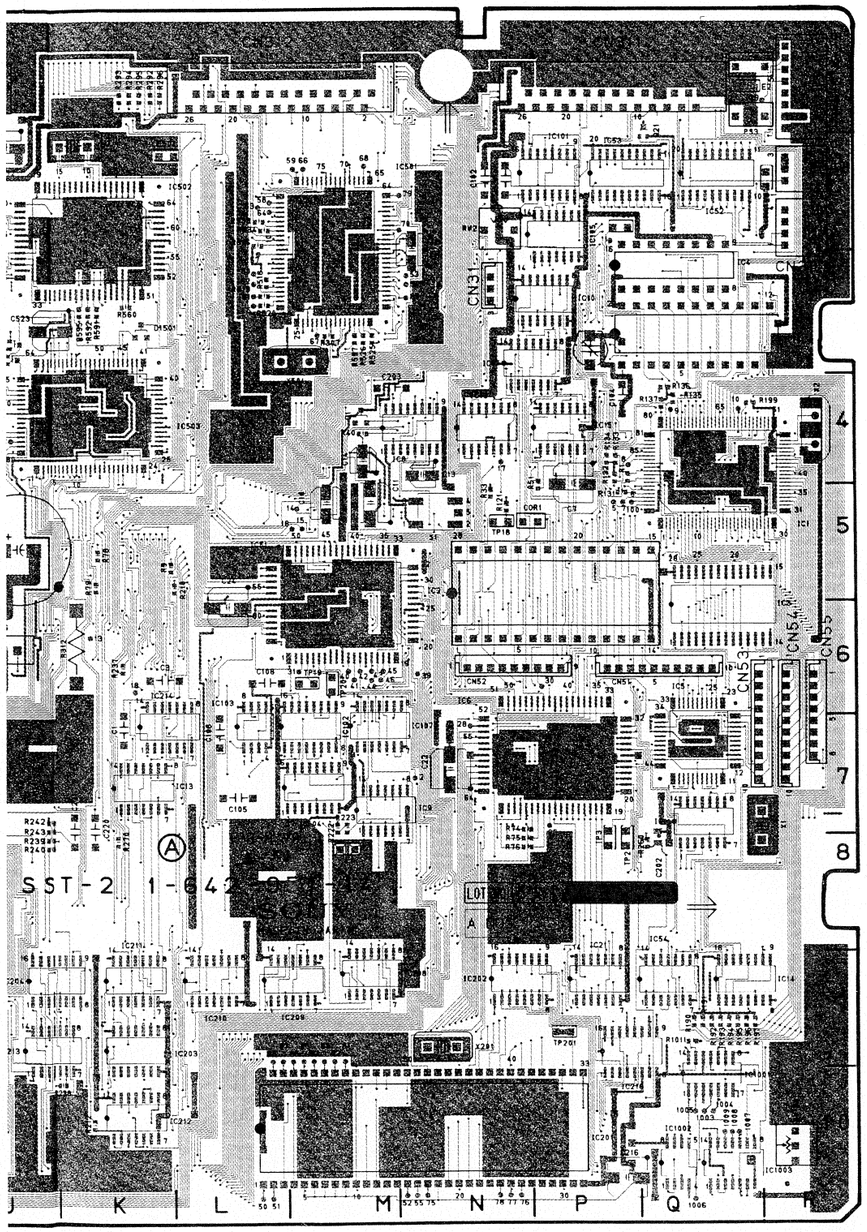

13-44 (b)

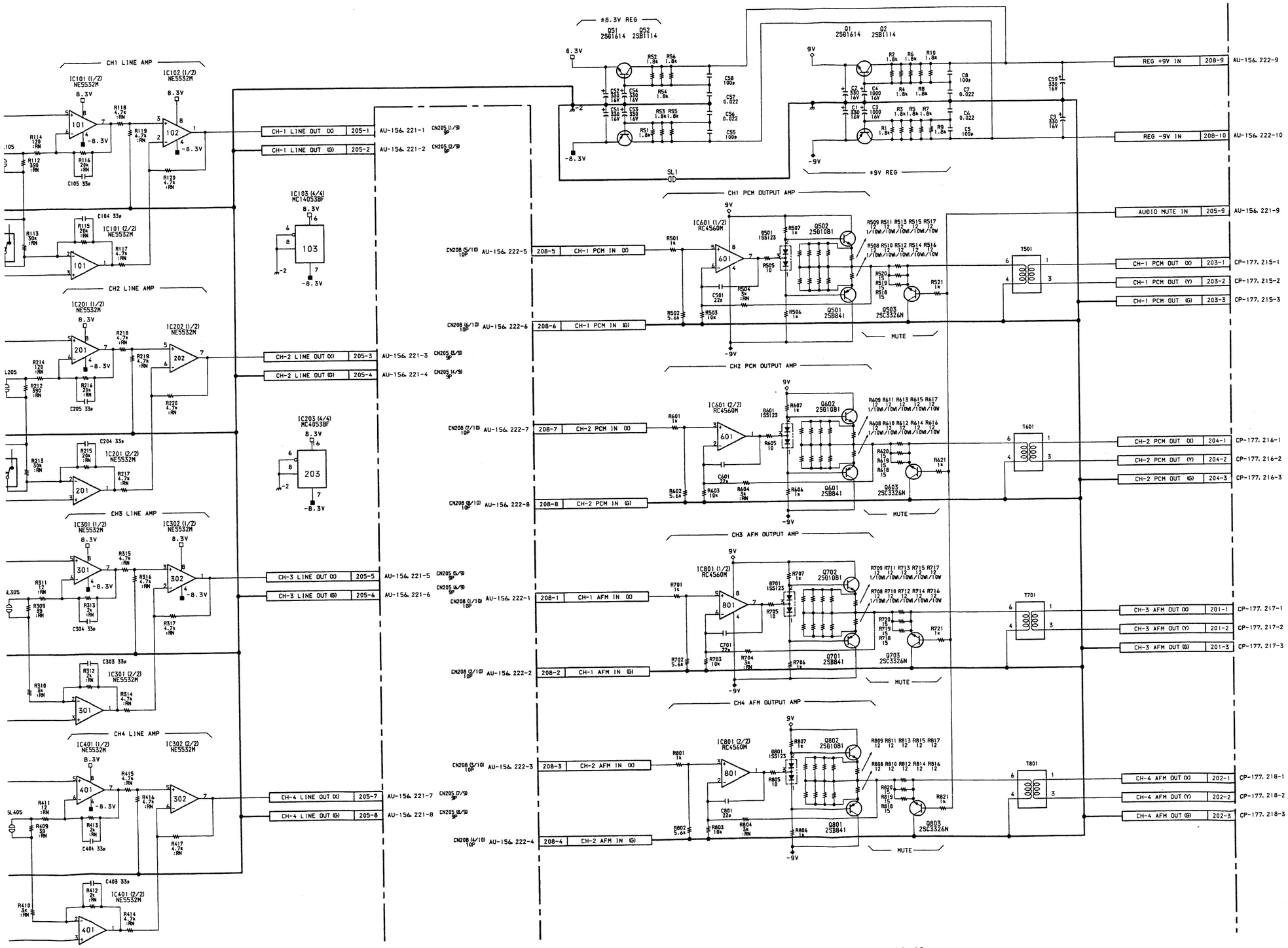

Audio Input/Output Amp

AA-57 BOARD

BOARD NO. 1-642-959-11, 12
EVO-9850 (J) : # 10001—
EVO-9850 (UC) : # 10031—

SST-2 (1-642-951-15)

CN5	A-5	D802	G-3 *	IC216	P-10	Q201	J-9 *	Q957	E-8 *	X401	B-3
CN31	N-3	D810	G-9	IC401	C-2 *	Q202	J-9 *	Q958	J-6 *	X501	M-4
CN51	P-6	D811	G-9 *	IC402	C-1	Q203	M-6 *			X502	K-1
CN52	N-6	D901	D-7	IC403	D-2	Q204	M-6 *	RV2	N-2	X701	C-5
CN53	Q-6	D902	F-5	IC404	B-1 *	Q205	K-10 *	RV401	C-6		
CN54	R-6	D903	G-5	IC405	D-3	Q401	B-3	RV402	C-6	* mark; B SIDE mount.	
CN55	R-6	D904	E-7 *	IC406	C-4 *	Q402	D-3 *	RV403	C-6		
CN61	J-4	D905	F-6	IC408	B-2	Q501	L-3 *	RV404	C-6		
CN62	J-4	D906	G-4 *	IC409	B-3 *	Q502	J-3	RV410	C-6		
CN63	H-2	D907	G-4 *	IC410	D-4 *	Q503	J-3	RV601	F-1		
CN307	R-3	D908	F-4 *	IC411	A-2	Q504	K-4 *	RV602	F-2		
CN308	D-6	D909	C-7 *	IC412	D-3 *	Q505	K-4 *	RV603	F-5		
CN309	R-2	D910	G-8	IC414	D-3	Q506	J-4 *	RV702	B-3		
CN311	P-1	D1001	Q-9 *	IC415	D-3 *	Q507	J-4 *	RV703	B-2		
CN312	L-1	D1002	Q-9 *	IC501	N-2	Q509	J-5 *	RV802	F-6		
CN313	H-1	D1501	K-3	IC502	K-2	Q510	J-6 *	RV803	F-6		
CN314	E-1			IC503	L-4	Q511	J-2 *	RV804	E-6		
CN315	B-1	E1	M-8	IC504	M-2 *	Q512	K-3 *	RV805	E-6		
CN316	A-2	E2	Q-1	IC601	E-3	Q513	J-3 *	RV901	D-6		
CN318	A-6	E3	R-2	IC602	F-2	Q514	J-3 *	RV1001	R-10		
CN319	A-4	E401	D-5	IC603	C-4 *	Q515	K-5 *				
CN320	A-3	E501	K-2	IC604	G-1 *	Q602	F-3 *	S1	N-5		
CN321	F-2	E601	G-1	IC605	C-1 *	Q603	F-3 *	S2	F-5		
CN322	H-3	E701	A-3	IC606	F-2 *	Q604	F-3 *	S401	C-2		
CN323	H-4			IC607	G-6	Q605	E-3 *				
CN324	H-6	IC1	R-5	IC701	B-1 *	Q706	A-4 *	TP1	B-6		
CN325	H-7	IC2	N-5	IC702	C-4	Q707	A-5 *	TP2	P-8		
CN326	H-3	IC3	R-6	IC703	B-7	Q708	B-5 *	TP3	P-8		
CN327	H-4	IC4	Q-3	IC704	A-1 *	Q709	A-5 *	TP11	B-6		
CN328	H-7	IC5	Q-6	IC705	B-6	Q710	A-7	TP12	B-6		
CN329	R-1	IC6	N-6	IC706	C-8	Q711	A-8	TP15	C-9		
CN330	A-6	IC8	M-4	IC707	D-2	Q712	B-5 *	TP16	C-9		
		IC9	N-7	IC801	G-6 *	Q713	B-6 *	TP18	N-5		
COP1	N-5	IC10	P-3	IC802	F-3	Q714	B-6 *	TP19	M-6		
COR1	N-5	IC11	Q-7	IC803	F-8 *	Q715	B-6 *	TP20	M-6		
CV100	P-3	IC13	L-7	IC804	G-7 *	Q716	B-6 *	TP26	C-10		
		IC14	R-9	IC805	F-9	Q717	A-6 *	TP27	C-10		
D1	M-4	IC15	P-4	IC806	G-9	Q718	A-6 *	TP28	C-10		
D2	N-4 *	IC16	B-9	IC809	G-7 *	Q719	B-6 *	TP29	C-10		
D3	M-4 *	IC17	N-3	IC901	F-5	Q802	G-2 *	TP30	P-2		
D5	C-7	IC18	N-5 *	IC902	D-8 *	Q803	G-2	TP201	P-9		
D6	C-7	IC19	N-4	IC903	D-7 *	Q804	G-3	TP401	C-4		
D7	M-6 *	IC21	P-8	IC904	D-8	Q809	F-8 *	TP402	D-4		
D10	L-6 *	IC22	E-10	IC905	C-7	Q810	G-9 *	TP403	C-4		
D11	L-5 *	IC23	C-10	IC906	G-1	Q811	G-9 *	TP404	F-6		
D12	N-2 *	IC51	L-5	IC1001	Q-10	Q812	E-5 *	TP405	G-5		
D13	K-7 *	IC52	Q-2	IC1002	Q-10	Q813	F-5	TP406	E-3		
D201	J-7 *	IC53	P-2	IC1003	R-10	Q814	G-4	TP501	H-5		
D203	N-3 *	IC54	Q-8			Q815	G-4	TP601	F-1		
D204	N-9 *	IC56	J-7	PS1	Q-1	Q816	G-4	TP602	F-1		
D206	K-7 *	IC57	J-7	PS2	C-7	Q817	G-4	TP603	F-5		
D401	C-5 *	IC100	R-3	PS3	Q-1	Q818	F-4	TP604	G-5		
D402	D-6 *	IC101	P-2	PS701	B-7	Q819	F-3	TP701	B-7		
D403	C-6 *	IC102	M-7	PS801	F-3	Q901	F-4	TP702	B-4		
D404	C-5 *	IC103	L-6	PS501	J-7	Q902	G-4	TP703	B-4		
D405	C-6 *	IC104	M-7			Q903	G-4	TP704	A-2		
D406	C-5 *	IC105	P-2	Q1	P-4 *	Q904	E-6 *	TP801	E-6		
D407	C-6 *	IC107	N-7	Q2	N-4 *	Q905	E-6	TP802	E-6		
D408	D-6 *	IC201	P-10	Q3	M-4 *	Q906	D-7 *	TP803	E-7		
D410	B-1	IC202	N-9	Q4	P-4 *	Q907	D-8 *	TP901	E-7		
D502	K-2 *	IC203	L-9	Q6	P-2 *	Q908	F-9	TP902	E-5		
D503	J-3 *	IC204	J-9	Q8	C-2	Q909	F-9	TP903	C-2		
D504	J-4 *	IC208	N-9	Q15	Q-4 *	Q950	F-7	TP904	F-9		
D505	J-4 *	IC209	M-9	Q16	J-6	Q951	G-8 *	TP905	F-9		
D506	K-4 *	IC210	L-9	Q17	M-6 *	Q952	G-2 *				
D602	E-3 *	IC211	K-8	Q18	M-5 *	Q953	G-4 *	X1	R-7		
D603	E-3 *	IC212	K-10	Q19	L-5 *	Q954	G-4 *	X2	R-4		
D604	F-3 *	IC213	J-9	Q20	L-5 *	Q955	C-8 *	X3	B-10		
D701	A-7	IC214	K-6	Q21	Q-1	Q956	E-9 *	X201	N-9		

SST-2 BOARD
A Side

Serial No.: (J) 10121 and higher
Serial No.: (UC) 10341 and higher

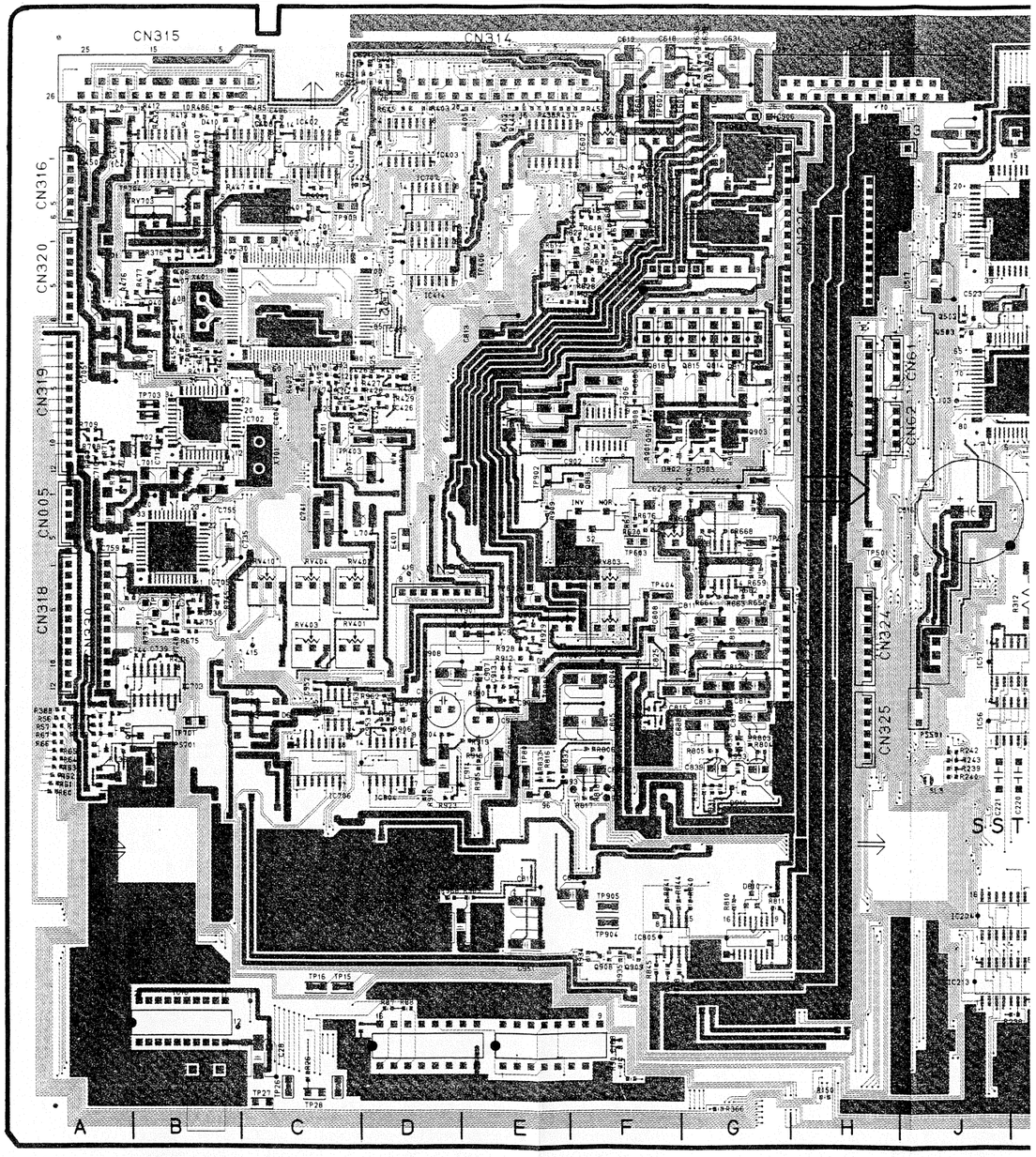

1-642-951-15 A SIDE

A Side is the same as Component Side

SST-2 SST-2

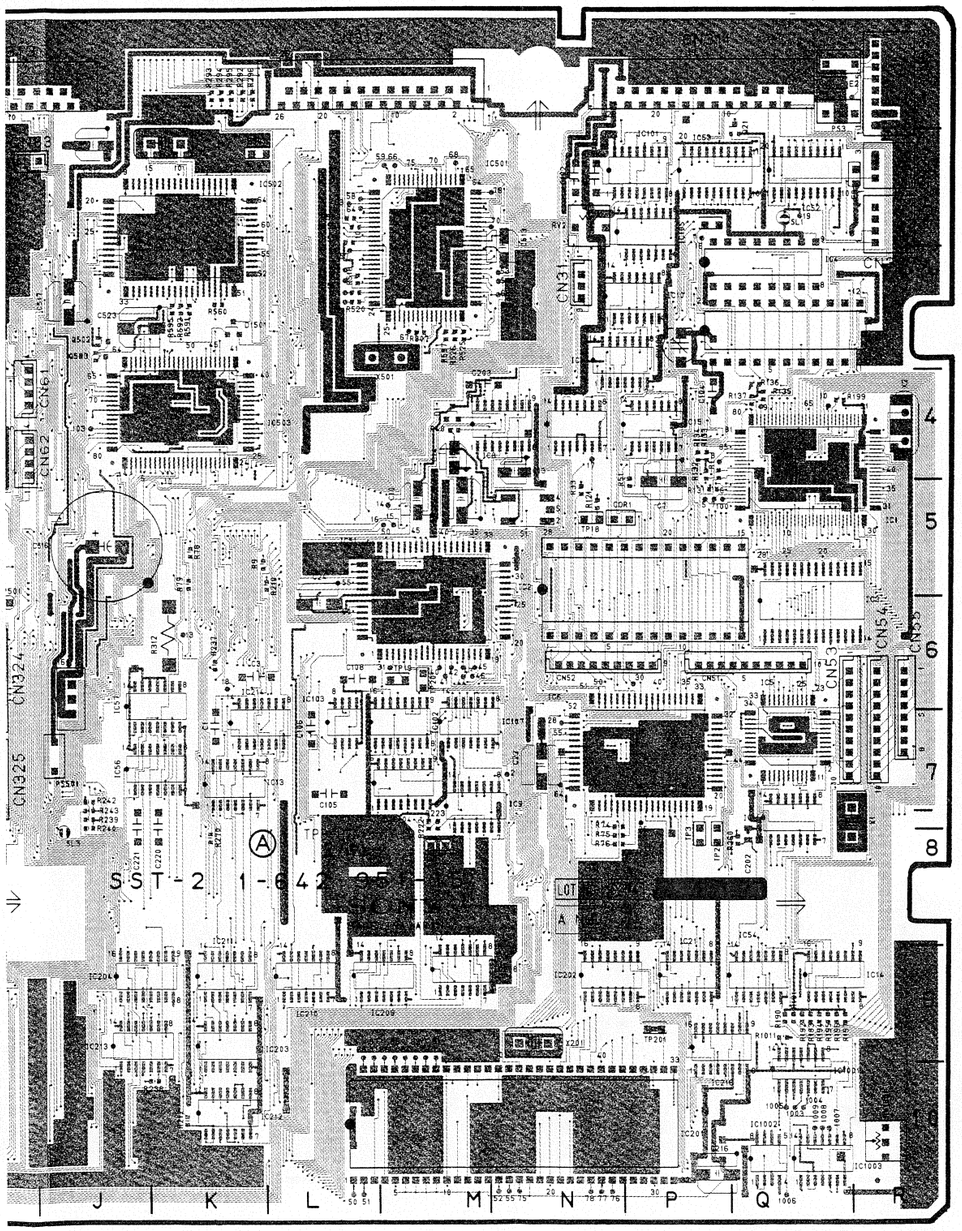

13-44(c)

SST-2 (1-642-951-13)

CN5	A-5	D901	D-7	IC409	B-3 *	Q507	J-4 *	RV405	C-6
CN31	N-3	D902	G-5	IC410	D-4 *	Q508	M-4 *	RV410	C-5
CN51	P-6	D903	G-5	IC411	B-1	Q509	J-5 *	RV601	F-1
CN52	N-6	D904	E-7 *	IC412	C-3 *	Q510	J-5 *	RV602	F-2
CN53	Q-6	D905	E-6	IC501	M-2	Q511	J-2 *	RV603	G-5
CN54	R-6	D906	G-4 *	IC502	K-2	Q512	K-3 *	RV701	B-6
CN55	R-6	D907	G-4 *	IC503	K-3	Q513	J-3 *	RV702	B-2
CN61	J-4	D908	F-4 *	IC504	M-2 *	Q514	J-3 *	RV703	B-2
CN62	J-4	D909	C-7 *	IC601	E-2 *	Q601	E-2 *	RV802	F-6
CN63	J-1	D910	G-7	IC602	F-2	Q602	F-2 *	RV803	F-5
CN307	R-3	D1002	Q-9 *	IC603	C-4 *	Q603	F-3 *	RV804	F-5
CN308	D-5			IC604	G-1	Q604	E-3 *	RV805	F-6
CN309	R-2	E1	M-8	IC605	D-1 *	Q605	E-3 *	RV901	B-6
CN311	P-1	E2	R-1	IC606	F-2 *	Q701	B-2 *	RV1001	R-10
CN312	M-1	E3	P-4	IC607	G-5	Q702	B-2 *		
CN313	H-1	E401	D-5	IC701	B-2 *	Q703	A-4	S1	N-5
CN314	E-1	E501	L-2	IC702	C-4	Q704	B-4	S401	C-2
CN315	B-1	E601	G-1	IC703	B-6	Q705	B-4		
CN316	A-2			IC704	A-2 *	Q706	A-4 *	TP1	C-9
CN318	A-6	IC1	Q-4	IC705	B-6	Q707	A-5 *	TP2	P-8
CN319	A-4	IC2	P-5	IC706	C-7	Q708	B-5 *	TP3	P-8
CN320	A-3	IC3	Q-5	IC707	D-5 *	Q709	A-5 *	TP11	D-9
CN321	G-2	IC4	Q-2	IC801	G-6	Q710	A-7	TP12	D-9
CN322	J-2	IC5	Q-6	IC802	F-3	Q711	A-8	TP15	C-9
CN323	H-4	IC6	P-6	IC803	E-7 *	Q712	C-5 *	TP16	C-9
CN324	H-6	IC8	M-4	IC804	G-7 *	Q713	B-6 *	TP18	N-5
CN325	H-7	IC9	M-8	IC805	F-9	Q714	B-6 *	TP19	M-6
CN326	H-2	IC10	N-3	IC806	G-9	Q715	B-6 *	TP20	M-6
CN327	H-4	IC11	Q-8	IC809	G-7 *	Q716	B-6 *	TP26	C-10
CN328	H-6	IC13	K-7	IC901	F-4	Q717	A-6 *	TP27	C-10
CN329	R-1	IC14	Q-8	IC902	D-8 *	Q718	A-6 *	TP28	C-10
CN330	B-6	IC15	P-4	IC903	E-7 *	Q719	B-6 *	TP29	C-10
		IC16	B-9	IC904	D-7	Q720	B-4	TP30	P-2
COP1	P-5	IC17	P-4	IC905	C-7	Q801	E-8 *	TP201	P-9
COR1	N-5	IC18	M-5 *	IC1001	Q-9	Q802	G-2 *	TP401	D-4
CV100	P-3	IC19	N-4	IC1002	Q-10	Q803	G-2	TP402	D-4
		IC21	P-8	IC1003	Q-10	Q804	G-2	TP403	D-4
D1	M-4	IC22	E-9			Q809	F-7	TP404	F-6
D2	N-4 *	IC23	D-9	PS1	Q-1	Q810	G-9 *	TP405	G-5
D3	M-4 *	IC51	L-5	PS2	C-7	Q811	G-9 *	TP406	D-3
D5	C-6	IC52	Q-2	PS3	Q-1	Q812	E-5	TP501	K-3
D6	C-7	IC53	P-2	PS701	B-7	Q813	F-5	TP601	F-1
D10	L-6 *	IC54	Q-8	PS801	G-3	Q814	G-3	TP602	F-1
D11	L-5 *	IC100	Q-4			Q815	G-3	TP603	F-5
D201	J-8 *	IC101	P-2	Q1	P-4 *	Q816	G-3	TP604	G-5
D203	N-4 *	IC102	M-7	Q2	N-4 *	Q817	G-3	TP701	B-7
D204	N-9 *	IC103	L-6	Q3	M-4 *	Q818	F-3	TP702	B-7
D206	K-7 *	IC104	M-7	Q4	P-4 *	Q819	F-3	TP801	F-9
D401	C-5 *	IC105	P-2	Q6	P-2 *	Q901	F-4	TP802	F-8
D402	D-5 *	IC107	M-7	Q8	C-2	Q902	G-4	TP803	E-7
D403	C-6 *	IC201	P-9	Q15	Q-4 *	Q903	G-4	TP901	E-6
D404	C-5 *	IC202	P-8	Q16	J-5	Q904	E-6 *	TP902	E-5
D405	C-6 *	IC203	K-9	Q17	M-6 *	Q905	E-6	TP903	D-2
D406	D-5 *	IC204	K-8	Q18	M-5 *	Q906	D-7 *	TP904	F-9
D407	C-6 *	IC208	M-9	Q19	L-5 *	Q907	D-7 *	TP905	F-8
D408	D-6 *	IC209	M-9	Q20	L-5 *	Q908	F-9		
D409	B-3	IC210	L-9	Q21	Q-1	Q909	F-9	X1	R-7
D502	K-2 *	IC211	K-8	Q201	J-9 *	Q950	F-7	X2	R-4
D503	J-4 *	IC212	K-10	Q202	J-9 *	Q951	G-8 *	X3	B-10
D504	J-4 *	IC213	J-10	Q203	M-6 *	Q952	G-2 *	X201	N-9
D505	J-5 *	IC214	K-6	Q204	M-6 *	Q953	G-4 *	X401	B-3
D506	J-4 *	IC216	P-10	Q205	K-10 *	Q954	G-4 *	X501	M-3
D511	K-4 *	IC401	C-2 *	Q401	B-3	Q955	C-8 *	X502	K-1
D602	E-3	IC402	C-1	Q501	L-3 *			X701	C-5 *
D603	E-3	IC403	D-1	Q502	J-3	RV2	N-3		
D701	A-7	IC404	C-2 *	Q503	J-3	RV401	D-6		
D802	G-3 *	IC405	C-2	Q504	K-4 *	RV402	D-5		
D810	G-8	IC406	D-4 *	Q505	K-4 *	RV403	C-6		
D811	G-9 *	IC408	C-1	Q506	J-4 *	RV404	C-5		

* mark ; B SIDE mount.

SST-2 BOARD

Serial No.: (J) 10001—10030
Serial No.: (UC) 10031—10070

B Side

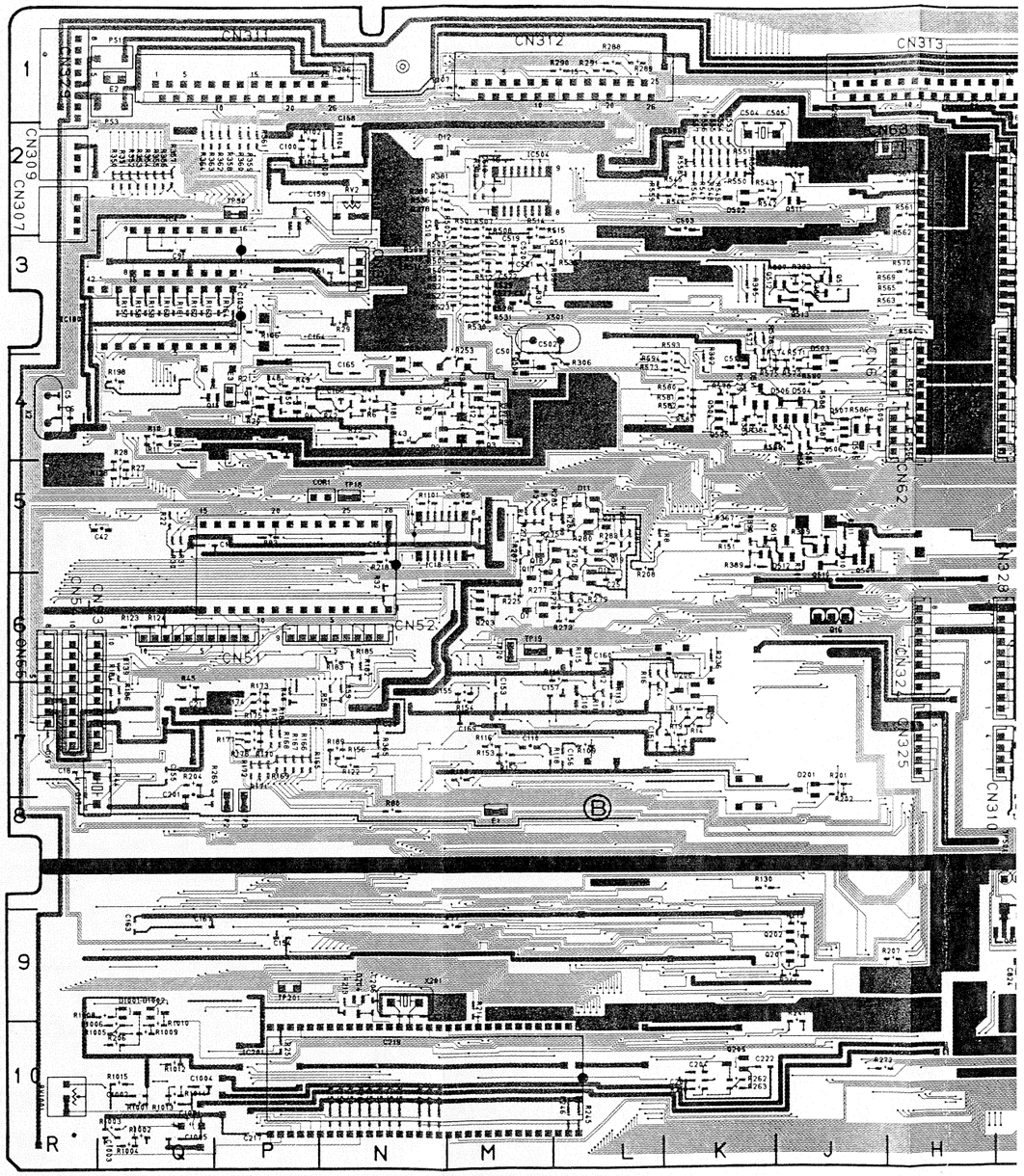

1-642-951-13 B SIDE

B Side is the same as Soldering Side

SST-2 BOARD

B Side

Serial No.: (J) 10001—10030
Serial No.: (UC) 10031—10070

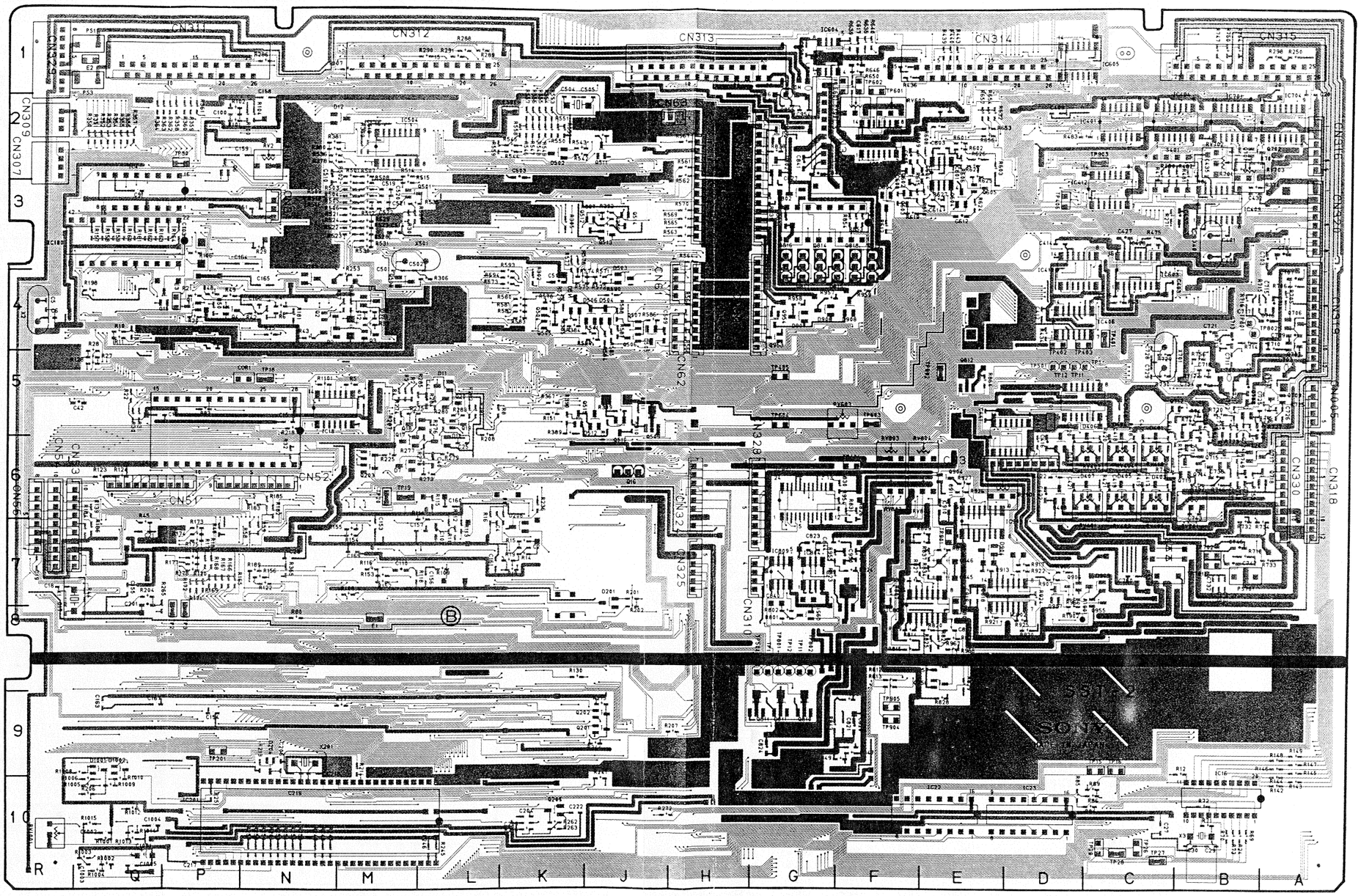

1-642-951-13 B SIDE

B Side is the same as Soldering Side

RV405	C-6
RV410	C-5
RV601	F-1
RV602	F-2
RV603	G-5
RV701	B-6
RV702	B-2
RV703	B-2
RV802	F-6
RV803	F-5
RV804	F-5
RV805	F-6
RV901	B-6
RV1001	R-10
S1	N-5
S401	C-2
TP1	C-9
TP2	P-8
TP3	P-8
TP11	D-9
TP12	D-9
TP15	C-9
TP16	C-9
TP18	N-5
TP19	M-6
TP20	M-6
TP26	C-10
TP27	C-10
TP28	C-10
TP29	C-10
TP30	P-2
TP201	P-9
TP401	D-4
TP402	D-4
TP403	D-4
TP404	F-6
TP405	G-5
TP406	D-3
TP501	K-3
TP601	F-1
TP602	F-1
TP603	F-5
TP604	G-5
TP701	B-7
TP702	B-7
TP801	F-9
TP802	F-8
TP803	E-7
TP901	E-6
TP902	E-5
TP903	D-2
TP904	F-9
TP905	F-8
X1	R-7
X2	R-4
X3	B-10
X201	N-9
X401	B-3
X501	M-3
X502	K-1
X701	C-5 *

* mark; B SIDE mount.

SST-2 (1-642-951-14)

CN5	A-5	D810	G-9	IC404	B-1 *	Q501	M-3 *	Q957	E-8 *	X401	B-3
CN31	N-3	D811	G-9 *	IC405	D-3	Q502	J-3	Q958	J-6 *	X501	W-4
CN51	P-6	D901	D-7	IC406	C-4 *	Q503	J-3			X502	K-1
CN52	N-6	D902	F-5	IC408	C-2	Q504	K-4 *	RV2	N-2	X701	C-5 *
CN53	Q-6	D903	G-5	IC409	B-3 *	Q505	K-4 *	RV401	C-6		
CN54	R-6	D904	E-7 *	IC410	D-4 *	Q506	J-4 *	RV402	C-6	* mark; B SIDE mount.	
CN55	R-6	D905	E-6	IC411	A-2	Q507	J-4 *	RV403	C-6		
CN61	J-4	D906	G-4 *	IC412	D-3 *	Q508	M-4 *	RV404	C-6		
CN62	J-4	D907	G-4 *	IC413	E-5 *	Q509	J-6 *	RV405	C-6		
CN63	H-2	D908	F-4 *	IC501	N-2	Q510	J-6 *	RV410	C-6		
CN307	R-3	D909	C-7 *	IC502	K-2	Q511	J-2 *	RV601	F-2		
CN308	D-6	D910	G-8	IC503	L-4	Q512	K-3 *	RV602	F-2		
CN309	R-2	D1001	Q-9 *	IC504	M-2 *	Q513	J-3 *	RV603	F-5		
CN311	P-1	D1002	Q-9 *	IC601	E-2 *	Q514	J-3 *	RV701	B-7		
CN312	L-1	D1501	K-3	IC602	F-2	Q515	K-5 *	RV702	B-3		
CN313	H-1			IC603	C-4 *	Q602	F-2 *	RV703	B-2		
CN314	E-1	E1	M-8	IC604	G-1 *	Q603	F-3 *	RV802	F-6		
CN315	B-1	E2	Q-1	IC605	C-1 *	Q604	E-3 *	RV803	F-6		
CN316	A-2	E3	R-2	IC606	F-2 *	Q605	E-3 *	RV804	E-6		
CN318	A-6	E401	D-5	IC607	G-6	Q701	B-2 *	RV805	E-6		
CN319	A-4	E501	K-2	IC701	B-2 *	Q702	A-2 *	RV901	D-6		
CN320	A-3	E601	G-1	IC702	C-4	Q703	A-4	RV1001	R-10		
CN321	G-2			IC703	B-7	Q704	B-4				
CN322	H-3	IC1	R-5	IC704	A-2 *	Q705	B-4	S1	N-5		
CN323	H-4	IC2	N-5	IC705	B-6	Q706	A-4 *	S2	N-5		
CN324	H-6	IC3	R-5	IC706	C-8	Q707	A-4 *	S401	C-2		
CN325	H-7	IC4	Q-3	IC707	D-5 *	Q708	B-5 *				
CN326	H-3	IC5	Q-6	IC801	G-6 *	Q709	A-5 *	TP1	B-6		
CN327	H-4	IC6	N-6	IC802	F-3	Q710	A-7	TP2	P-8		
CN328	H-7	IC8	M-4	IC803	F-7 *	Q711	A-8	TP3	P-8		
CN329	R-1	IC9	N-7	IC804	G-7 *	Q712	B-5 *	TP11	B-6		
CN330	A-6	IC10	P-3	IC805	F-9	Q713	B-6 *	TP12	B-6		
		IC11	Q-7	IC806	G-9	Q714	B-6 *	TP15	C-9		
COP1	N-5	IC13	L-7	IC809	G-7 *	Q715	B-6 *	TP16	C-9		
COR1	N-5	IC14	R-9	IC901	F-5	Q716	B-6 *	TP18	N-5		
CV100	P-3	IC15	P-4	IC902	D-8 *	Q717	A-6 *	TP19	M-6		
		IC16	B-9	IC903	D-7 *	Q718	A-6 *	TP20	M-6		
D1	M-4	IC17	N-3	IC904	D-8	Q719	B-6 *	TP26	C-10		
D2	N-4 *	IC18	N-5 *	IC905	C-7	Q720	B-4	TP27	C-10		
D3	M-4 *	IC19	N-4	IC906	G-1	Q802	G-2 *	TP28	C-10		
D5	C-7	IC21	P-8	IC1001	Q-10	Q803	G-2	TP29	C-10		
D6	C-7	IC22	E-10	IC1002	Q-10	Q804	G-3	TP30	P-2		
D7	M-6 *	IC23	C-10	IC1003	R-10	Q809	F-8 *	TP201	P-9		
D10	L-6 *	IC51	L-5			Q810	G-9 *	TP401	C-4		
D11	L-5 *	IC52	Q-2	PS1	Q-1	Q811	G-9 *	TP402	D-4		
D12	N-2 *	IC53	P-2	PS2	C-7	Q812	E-5 *	TP403	D-4		
D201	J-7 *	IC54	Q-8	PS3	Q-1	Q813	F-5	TP404	F-6		
D203	N-4 *	IC100	R-3	PS701	B-7	Q814	G-3	TP405	G-5		
D204	N-9 *	IC101	P-2	PS801	G-2	Q815	G-3	TP406	D-3		
D206	K-7 *	IC102	M-7			Q816	G-3	TP501	G-5		
D401	C-5 *	IC103	L-6	Q1	P-4 *	Q817	G-3	TP601	F-1		
D402	D-6 *	IC104	M-7	Q2	N-4 *	Q818	F-3	TP602	F-1		
D403	C-6 *	IC105	P-2	Q3	M-4 *	Q819	F-3	TP603	F-5		
D404	C-5 *	IC107	N-7	Q4	P-4 *	Q901	F-4	TP604	G-5		
D405	C-6 *	IC201	P-10	Q6	P-2 *	Q902	G-4	TP701	B-7		
D406	C-5 *	IC202	P-9	Q8	C-2	Q903	G-4	TP702	B-7		
D407	C-6 *	IC203	L-9	Q15	Q-4 *	Q904	E-6 *	TP801	E-6		
D408	D-6 *	IC204	J-9	Q16	J-6	Q905	E-6	TP802	E-6		
D502	K-2 *	IC208	N-9	Q17	M-6 *	Q906	D-7 *	TP803	E-7		
D503	J-4 *	IC209	M-9	Q18	M-5 *	Q907	D-8 *	TP901	E-7		
D504	J-4 *	IC210	L-9	Q19	L-5 *	Q908	F-9	TP902	E-5		
D505	J-4 *	IC211	K-8	Q20	L-5 *	Q909	F-9	TP903	C-2		
D506	J-4 *	IC212	K-10	Q21	Q-1	Q950	F-7	TP904	F-9		
D512	J-5 *	IC213	J-9	Q201	J-9 *	Q951	G-8 *	TP905	F-9		
D602	E-3	IC214	K-6	Q202	J-9 *	Q952	G-2 *				
D603	E-3	IC216	P-10	Q203	M-6 *	Q953	G-4 *	X1	R-7		
D604	F3 *	IC401	C-2 *	Q204	M-6 *	Q954	G-4 *	X2	R-4		
D701	A-7	IC402	C-2	Q205	K-10 *	Q955	C-8 *	X3	B-10		
D802	G-3 *	IC403	D-2	Q401	B-3	Q956	E-9 *	X201	N-9		

SST-2 BOARD
B Side

Serial No.: (J) 10031 and higher
Serial No.: (UC) 10071 and higher

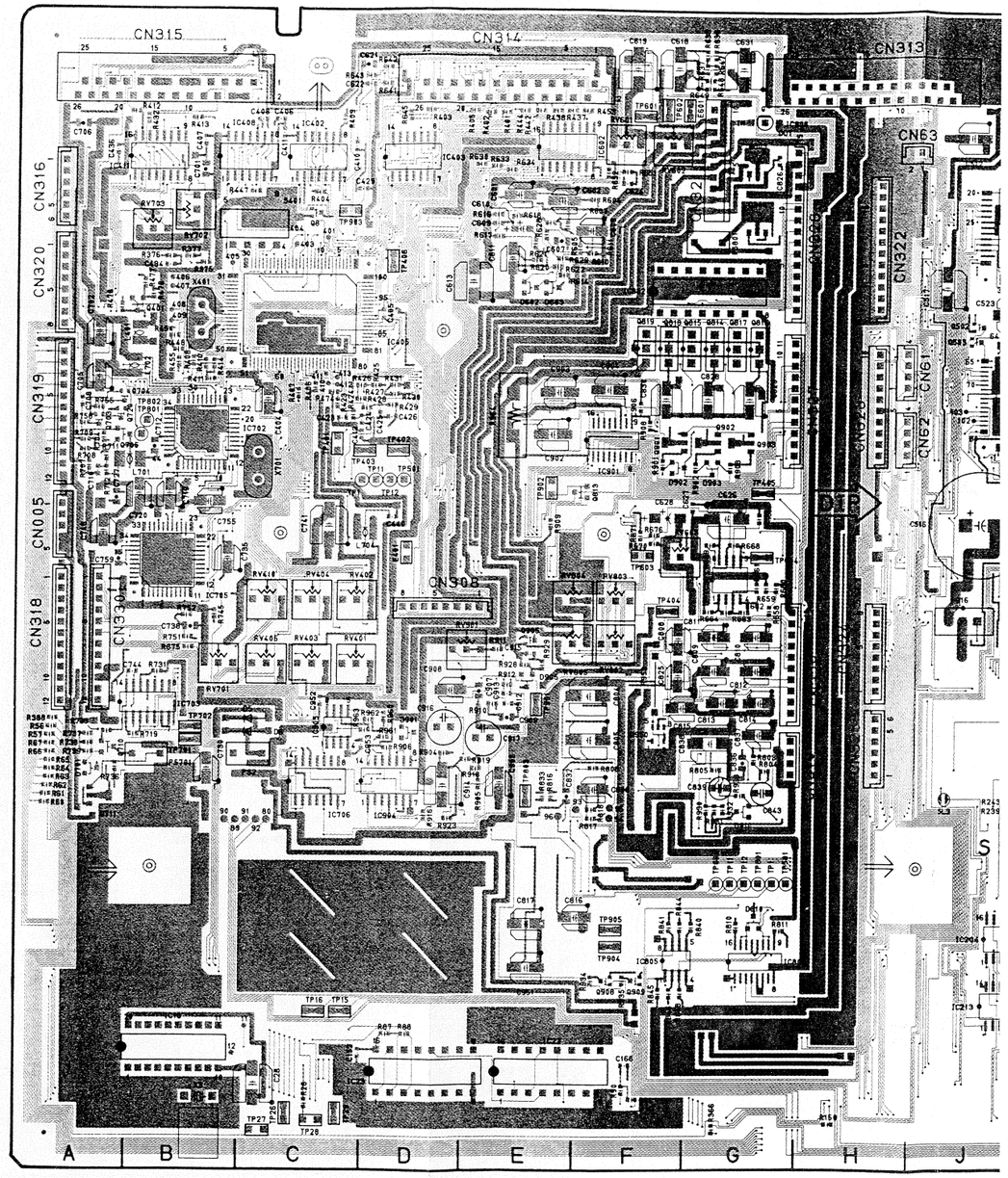

1-642-951-14 B SIDE

B Side is the same as Soldering Side

SST-2 BOARD
B Side

Serial No.: (J) 10031 and higher
Serial No.: (UC) 10071 and higher

X401 B-3
X501 W-4
X502 K-1
X701 C-5 *

* mark; B SIDE mount.

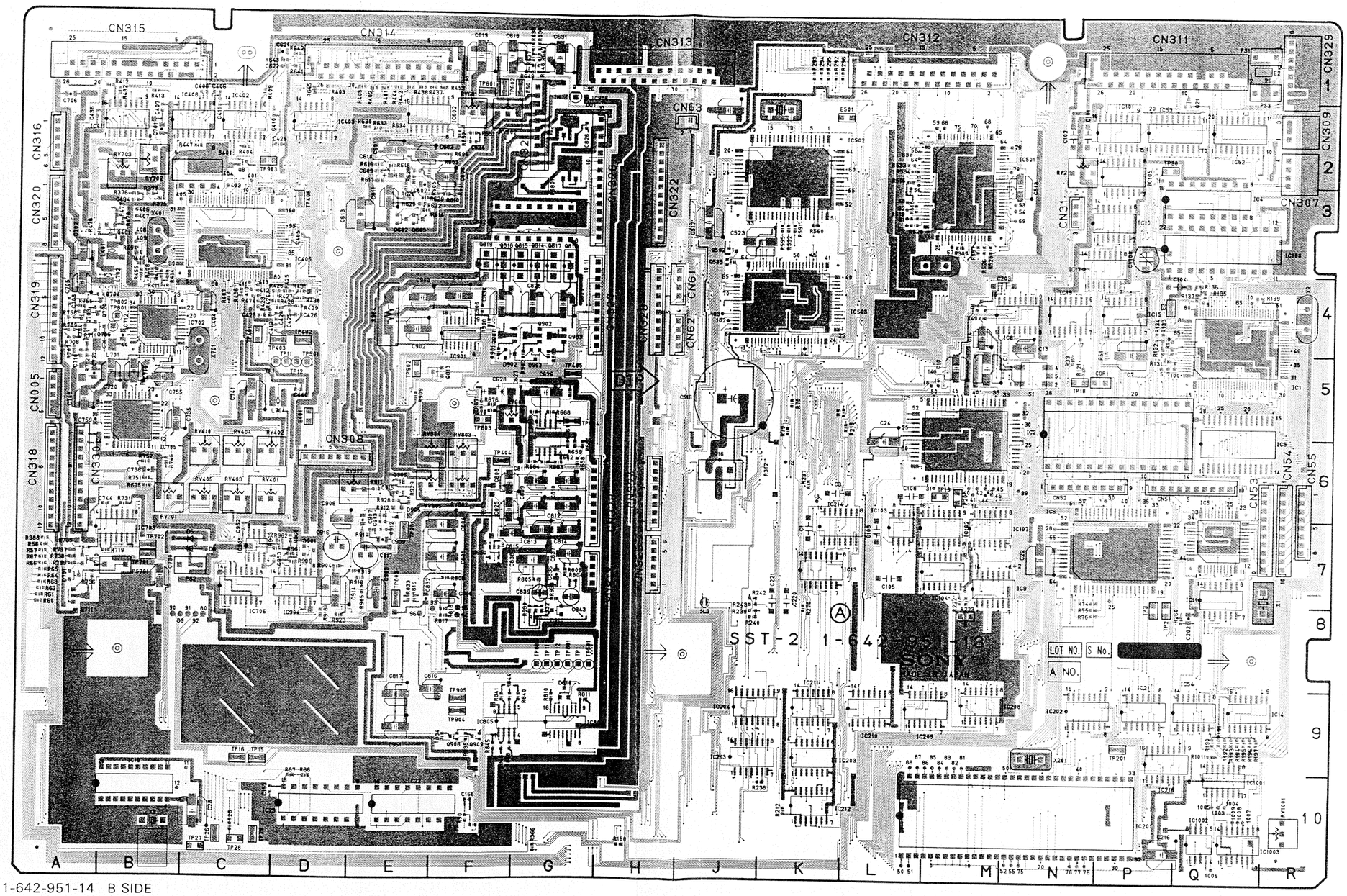

1-642-951-14 B SIDE

B Side is the same as Soldering Side

13-46 (b)

SST-2 (1-642-951-14)

CN5	A-5	D810	G-9	IC404	B-1 *	Q501	M-3 *	Q957	E-8 *	X401	B-3
CN31	N-3	D811	G-9 *	IC405	D-3	Q502	J-3	Q958	J-6 *	X501	W-4
CN51	P-6	D901	D-7	IC406	C-4 *	Q503	J-3			X502	K-1
CN52	N-6	D902	F-5	IC408	C-2	Q504	K-4 *	RV2	N-2	X701	C-5 *
CN53	Q-6	D903	G-5	IC409	B-3 *	Q505	K-4 *	RV401	C-6		
CN54	R-6	D904	E-7 *	IC410	D-4 *	Q506	J-4 *	RV402	C-6	* mark; B SIDE mount.	
CN55	R-6	D905	E-6	IC411	A-2	Q507	J-4 *	RV403	C-6		
CN61	J-4	D906	G-4 *	IC412	D-3 *	Q508	M-4 *	RV404	C-6		
CN62	J-4	D907	G-4 *	IC413	E-5 *	Q509	J-6 *	RV405	C-6		
CN63	H-2	D908	F-4 *	IC501	N-2	Q510	J-6 *	RV410	C-6		
CN307	R-3	D909	C-7 *	IC502	K-2	Q511	J-2 *	RV601	F-2		
CN308	D-6	D910	G-8	IC503	L-4	Q512	K-3 *	RV602	F-2		
CN309	R-2	D1001	Q-9 *	IC504	M-2 *	Q513	J-3 *	RV603	F-5		
CN311	P-1	D1002	Q-9 *	IC601	E-2 *	Q514	J-3 *	RV701	B-7		
CN312	L-1	D1501	K-3	IC602	F-2	Q515	K-5 *	RV702	B-3		
CN313	H-1			IC603	C-4 *	Q602	F-2 *	RV703	B-2		
CN314	E-1	E1	M-8	IC604	G-1 *	Q603	F-3 *	RV802	F-6		
CN315	B-1	E2	Q-1	IC605	C-1 *	Q604	E-3 *	RV803	F-6		
CN316	A-2	E3	R-2	IC606	F-2 *	Q605	E-3 *	RV804	E-6		
CN318	A-6	E401	D-5	IC607	G-6	Q701	B-2 *	RV805	E-6		
CN319	A-4	E501	K-2	IC701	B-2 *	Q702	A-2 *	RV901	D-6		
CN320	A-3	E601	G-1	IC702	C-4	Q703	A-4	RV1001	R-10		
CN321	G-2			IC703	B-7	Q704	B-4				
CN322	H-3	IC1	R-5	IC704	A-2 *	Q705	B-4	S1	N-5		
CN323	H-4	IC2	N-5	IC705	B-6	Q706	A-4 *	S2	N-5		
CN324	H-6	IC3	R-5	IC706	C-8	Q707	A-4 *	S401	C-2		
CN325	H-7	IC4	Q-3	IC707	D-5 *	Q708	B-5 *				
CN326	H-3	IC5	Q-6	IC801	G-6 *	Q709	A-5 *	TP1	B-6		
CN327	H-4	IC6	N-6	IC802	F-3	Q710	A-7	TP2	P-8		
CN328	H-7	IC8	M-4	IC803	F-7 *	Q711	A-8	TP3	P-8		
CN329	R-1	IC9	N-7	IC804	G-7 *	Q712	B-5 *	TP11	B-6		
CN330	A-6	IC10	P-3	IC805	F-9	Q713	B-6 *	TP12	B-6		
		IC11	Q-7	IC806	G-9	Q714	B-6 *	TP15	C-9		
COP1	N-5	IC13	L-7	IC809	G-7 *	Q715	B-6 *	TP16	C-9		
COR1	N-5	IC14	R-9	IC901	F-5	Q716	B-6 *	TP18	N-5		
CV100	P-3	IC15	P-4	IC902	D-8 *	Q717	A-6 *	TP19	M-6		
		IC16	B-9	IC903	D-7 *	Q718	A-6 *	TP20	M-6		
D1	M-4	IC17	N-3	IC904	D-8	Q719	B-6 *	TP26	C-10		
D2	N-4 *	IC18	N-5 *	IC905	C-7	Q720	B-4	TP27	C-10		
D3	M-4 *	IC19	N-4	IC906	G-1	Q802	G-2 *	TP28	C-10		
D5	C-7	IC21	P-8	IC1001	Q-10	Q803	G-2	TP29	C-10		
D6	C-7	IC22	E-10	IC1002	Q-10	Q804	G-3	TP30	P-2		
D7	M6 *	IC23	C-10	IC1003	R-10	Q809	F-8 *	TP201	P-9		
D10	L-6 *	IC51	L-5			Q810	G-9 *	TP401	C-4		
D11	L-5 *	IC52	Q-2	PS1	Q-1	Q811	G-9 *	TP402	D-4		
D12	N2 *	IC53	P-2	PS2	C-7	Q812	E-5 *	TP403	D-4		
D201	J-7 *	IC54	Q-8	PS3	Q-1	Q813	F-5	TP404	F-6		
D203	N-4 *	IC100	R-3	PS701	B-7	Q814	G-3	TP405	G-5		
D204	N-9 *	IC101	P-2	PS801	G-2	Q815	G-3	TP406	D-3		
D206	K-7 *	IC102	M-7			Q816	G-3	TP501	G-5		
D401	C-5 *	IC103	L-6	Q1	P-4 *	Q817	G-3	TP601	F-1		
D402	D-6 *	IC104	M-7	Q2	N-4 *	Q818	F-3	TP602	F-1		
D403	C-6 *	IC105	P-2	Q3	M-4 *	Q819	F-3	TP603	F-5		
D404	C-5 *	IC107	N-7	Q4	P-4 *	Q901	F-4	TP604	G-5		
D405	C-6 *	IC201	P-10	Q6	P-2 *	Q902	G-4	TP701	B-7		
D406	C-5 *	IC202	P-9	Q8	C-2	Q903	G-4	TP702	B-7		
D407	C-6 *	IC203	L-9	Q15	Q-4 *	Q904	E-6 *	TP801	E-6		
D408	D-6 *	IC204	J-9	Q16	J-6	Q905	E-6	TP802	E-6		
D502	K-2 *	IC208	N-9	Q17	M-6 *	Q906	D-7 *	TP803	E-7		
D503	J-4 *	IC209	M-9	Q18	M-5 *	Q907	D-8 *	TP901	E-7		
D504	J-4 *	IC210	L-9	Q19	L-5 *	Q908	F-9	TP902	E-5		
D505	J-4 *	IC211	K-8	Q20	L-5 *	Q909	F-9	TP903	C-2		
D506	J-4 *	IC212	K-10	Q21	Q-1	Q950	F-7	TP904	F-9		
D512	J-5 *	IC213	J-9	Q201	J-9 *	Q951	G-8 *	TP905	F-9		
D602	E-3	IC214	K-6	Q202	J-9 *	Q952	G-2 *				
D603	E-3	IC216	P-10	Q203	M-6 *	Q953	G-4 *	X1	R-7		
D604	F3 *	IC401	C-2 *	Q204	M-6 *	Q954	G-4 *	X2	R-4		
D701	A-7	IC402	C-2	Q205	K-10 *	Q955	C-8 *	X3	B-10		
D802	G-3 *	IC403	D-2	Q401	B-3	Q956	E-9 *	X201	N-9		

SST-2 BOARD
B Side

Serial No.: (J) 10031—10120
Serial No.: (UC) 10071—10340

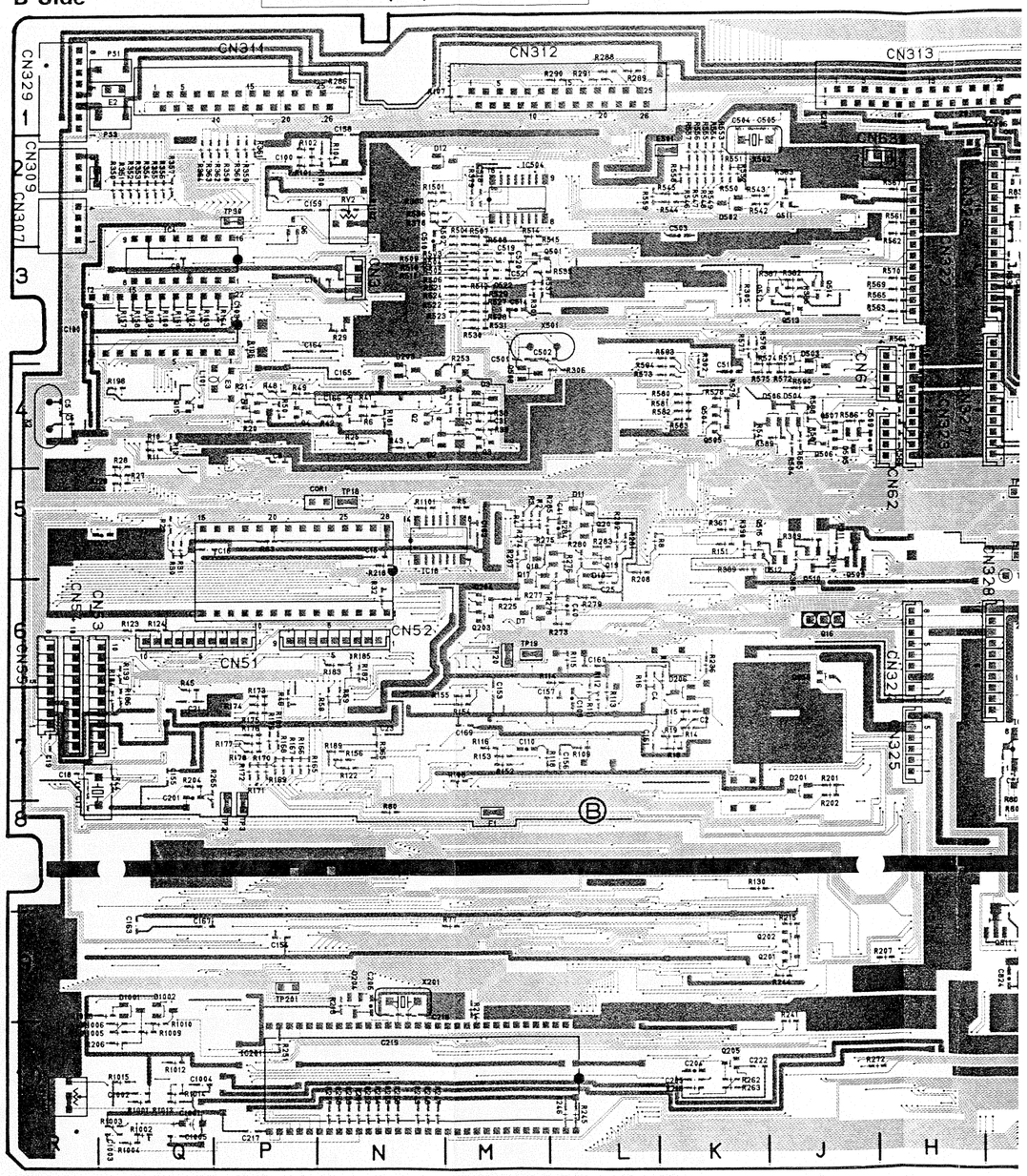

1-642-951-14 B SIDE

B Side is the same as Soldering Side

)1 B-3
)1 W-4
)2 K-1
)1 C-5 *

lark ; B SIDE mount.

SST-2 BOARD
B Side

Serial No.: (J) 10031—10120
Serial No.: (UC) 10071—10340

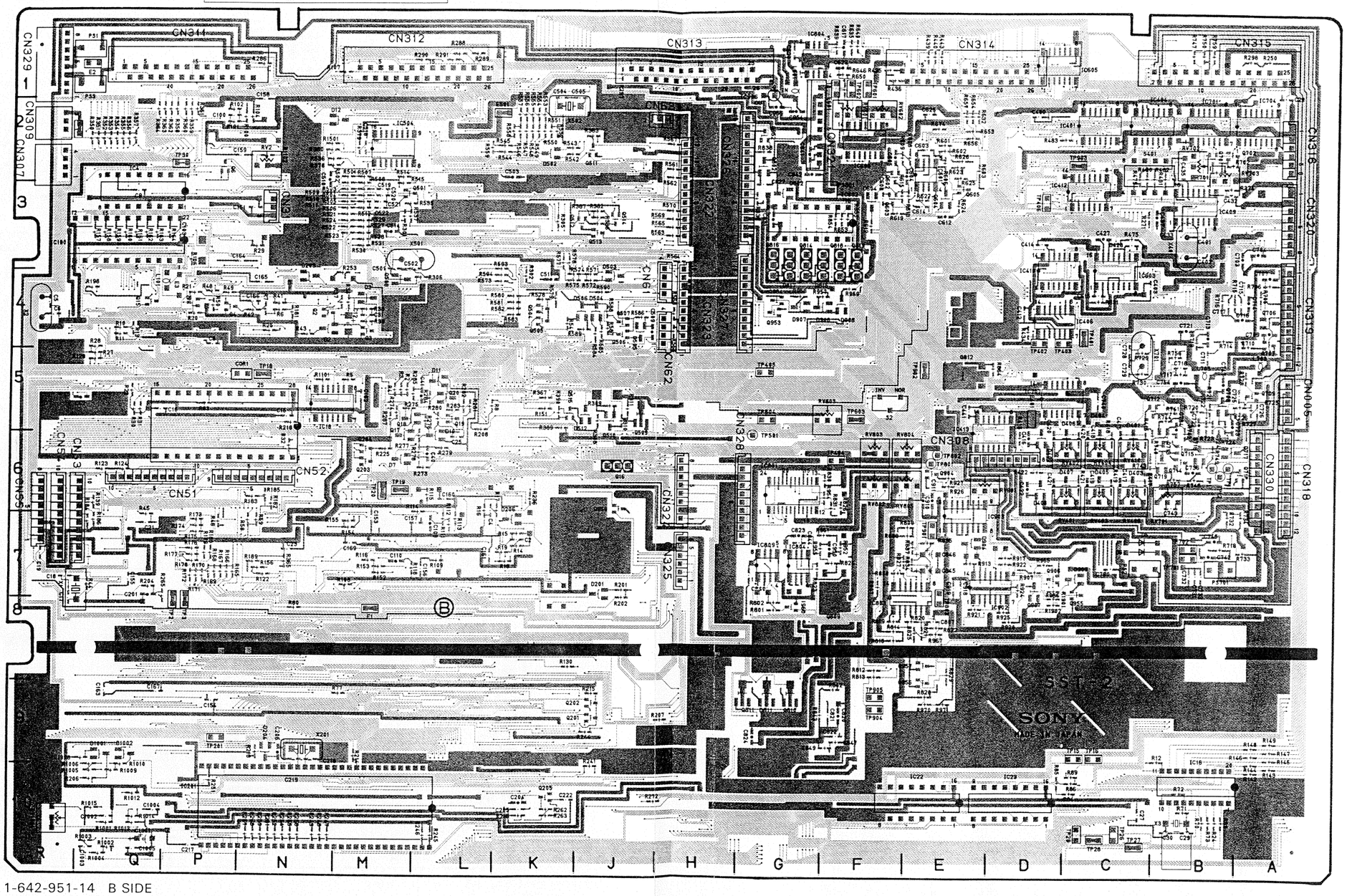

1-642-951-14 B SIDE

B Side is the same as Soldering Side

13-46 (b)

SST-2 (1-642-951-15)

CN5	A-5	D802	G-3 *	IC216	P-10	Q201	J-9 *	Q957	E-8 *	X401	B-3
CN31	N-3	D810	G-9	IC401	C-2 *	Q202	J-9 *	Q958	J-6 *	X501	M-4
CN51	P-6	D811	G-9 *	IC402	C-1	Q203	M-6 *			X502	K-1
CN52	N-6	D901	D-7	IC403	D-2	Q204	M-6 *	RV2	N-2	X701	C-5
CN53	Q-6	D902	F-5	IC404	B-1 *	Q205	K-10 *	RV401	C-6		
CN54	R-6	D903	G-5	IC405	D-3	Q401	B-3	RV402	C-6	* mark ; B SIDE mount.	
CN55	R-6	D904	E-7 *	IC406	C-4 *	Q402	D-3 *	RV403	C-6		
CN61	J-4	D905	F-6	IC408	B-2	Q501	L-3 *	RV404	C-6		
CN62	J-4	D906	G-4 *	IC409	B-3 *	Q502	J-3	RV410	C-6		
CN63	H-2	D907	G-4 *	IC410	D-4 *	Q503	J-3	RV601	F-1		
CN307	R-3	D908	F-4 *	IC411	A-2	Q504	K-4 *	RV602	F-2		
CN308	D-6	D909	C-7 *	IC412	D-3 *	Q505	K-4 *	RV603	F-5		
CN309	R-2	D910	G-8	IC414	D-3	Q506	J-4 *	RV702	B-3		
CN311	P-1	D1001	Q-9 *	IC415	D-3 *	Q507	J-4 *	RV703	B-2		
CN312	L-1	D1002	Q-9 *	IC501	N-2	Q509	J-5 *	RV802	F-6		
CN313	H-1	D1501	K-3	IC502	K-2	Q510	J-6 *	RV803	F-6		
CN314	E-1			IC503	L-4	Q511	J-2 *	RV804	E-6		
CN315	B-1	E1	M-8	IC504	M-2 *	Q512	K-3 *	RV805	E-6		
CN316	A-2	E2	Q-1	IC601	E-3	Q513	J-3 *	RV901	D-6		
CN318	A-6	E3	R-2	IC602	F-2	Q514	J-3 *	RV1001	R-10		
CN319	A-4	E401	D-5	IC603	C-4 *	Q515	K-5 *				
CN320	A-3	E501	K-2	IC604	G-1 *	Q602	F-3 *	S1	N-5		
CN321	F-2	E601	G-1	IC605	C-1 *	Q603	F-3 *	S2	F-5		
CN322	H-3	E701	A-3	IC606	F-2 *	Q604	F-3 *	S401	C-2		
CN323	H-4			IC607	G-6	Q605	E-3 *				
CN324	H-6	IC1	R-5	IC701	B-1 *	Q706	A-4 *	TP1	B-6		
CN325	H-7	IC2	N-5	IC702	C-4	Q707	A-5 *	TP2	P-8		
CN326	H-3	IC3	R-6	IC703	B-7	Q708	B-5 *	TP3	P-8		
CN327	H-4	IC4	Q-3	IC704	A-1 *	Q709	A-5 *	TP11	B-6		
CN328	H-7	IC5	Q-6	IC705	B-6	Q710	A-7	TP12	B-6		
CN329	R-1	IC6	N-6	IC706	C-8	Q711	A-8	TP15	C-9		
CN330	A-6	IC8	M-4	IC707	D-2	Q712	B-5 *	TP16	C-9		
		IC9	N-7	IC801	G-6 *	Q713	B-6 *	TP18	N-5		
COP1	N-5	IC10	P-3	IC802	F-3	Q714	B-6 *	TP19	M-6		
COR1	N-5	IC11	Q-7	IC803	F-8 *	Q715	B-6 *	TP20	M-6		
CV100	P-3	IC13	L-7	IC804	G-7 *	Q716	B-6 *	TP26	C-10		
		IC14	R-9	IC805	F-9	Q717	A-6 *	TP27	C-10		
D1	M-4	IC15	P-4	IC806	G-9	Q718	A-6 *	TP28	C-10		
D2	N-4 *	IC16	B-9	IC809	G-7 *	Q719	B-6 *	TP29	C-10		
D3	M-4 *	IC17	N-3	IC901	F-5	Q802	G-2 *	TP30	P-2		
D5	C-7	IC18	N-5 *	IC902	D-8 *	Q803	G-2	TP201	P-9		
D6	C-7	IC19	N-4	IC903	D-7 *	Q804	G-3	TP401	C-4		
D7	M6 *	IC21	P-8	IC904	D-8	Q809	F-8 *	TP402	D-4		
D10	L-6 *	IC22	E-10	IC905	C-7	Q810	G-9 *	TP403	C-4		
D11	L-5 *	IC23	C-10	IC906	G-1	Q811	G-9 *	TP404	F-6		
D12	N2 *	IC51	L-5	IC1001	Q-10	Q812	E-5 *	TP405	G-5		
D13	K-7 *	IC52	Q-2	IC1002	Q-10	Q813	F-5	TP406	E-3		
D201	J-7 *	IC53	P-2	IC1003	R-10	Q814	G-4	TP501	H-5		
D203	N-3 *	IC54	Q-8			Q815	G-4	TP601	F-1		
D204	N-9 *	IC56	J-7	PS1	Q-1	Q816	G-4	TP602	F-1		
D206	K-7 *	IC57	J-7	PS2	C-7	Q817	G-4	TP603	F-5		
D401	C-5 *	IC100	R-3	PS3	Q-1	Q818	F-4	TP604	G-5		
D402	D-6 *	IC101	P-2	PS701	B-7	Q819	F-3	TP701	B-7		
D403	C-6 *	IC102	M-7	PS801	F-3	Q901	F-4	TP702	B-4		
D404	C-5 *	IC103	L-6	PS501	J-7	Q902	G-4	TP703	B-4		
D405	C-6 *	IC104	M-7			Q903	G-4	TP704	A-2		
D406	C-5 *	IC105	P-2	Q1	P-4 *	Q904	E-6 *	TP801	E-6		
D407	C-6 *	IC107	N-7	Q2	N-4 *	Q905	E-6	TP802	E-6		
D408	D-6 *	IC201	P-10	Q3	M-4 *	Q906	D-7 *	TP803	E-7		
D410	B-1	IC202	N-9	Q4	P-4 *	Q907	D-8 *	TP901	E-7		
D502	K-2 *	IC203	L-9	Q6	P-2 *	Q908	F-9	TP902	E-5		
D503	J-3 *	IC204	J-9	Q8	C-2	Q909	F-9	TP903	C-2		
D504	J-4 *	IC208	N-9	Q15	Q-4 *	Q950	F-7	TP904	F-9		
D505	J-4 *	IC209	M-9	Q16	J-6	Q951	G-8 *	TP905	F-9		
D506	K-4 *	IC210	L-9	Q17	M-6 *	Q952	G-2 *				
D602	E-3 *	IC211	K-8	Q18	M-5 *	Q953	G-4 *	X1	R-7		
D603	E-3 *	IC212	K-10	Q19	L-5 *	Q954	G-4 *	X2	R-4		
D604	F3 *	IC213	J-9	Q20	L-5 *	Q955	C-8 *	X3	B-10		
D701	A-7	IC214	K-6	Q21	Q-1	Q956	E-9 *	X201	N-9		

SST-2 BOARD
B Side

Serial No.: (J) 10121 and higher
Serial No.: (UC) 10341 and higher

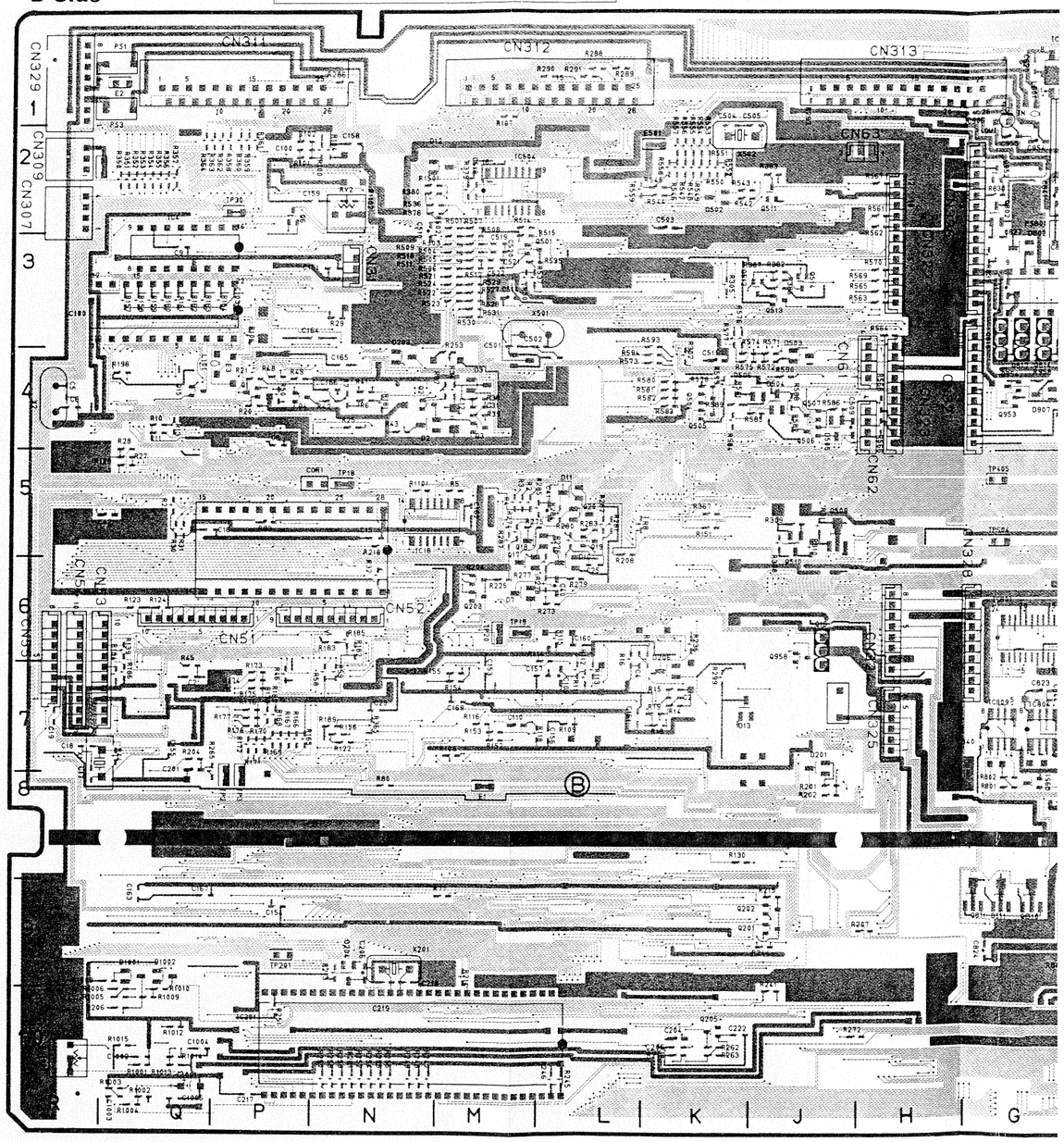

1-642-951-15 B SIDE

B Side is the same as Soldering Side

SST-2 BOARD
B Side

Serial No.: (J) 10121 and higher
Serial No.: (UC) 10341 and higher

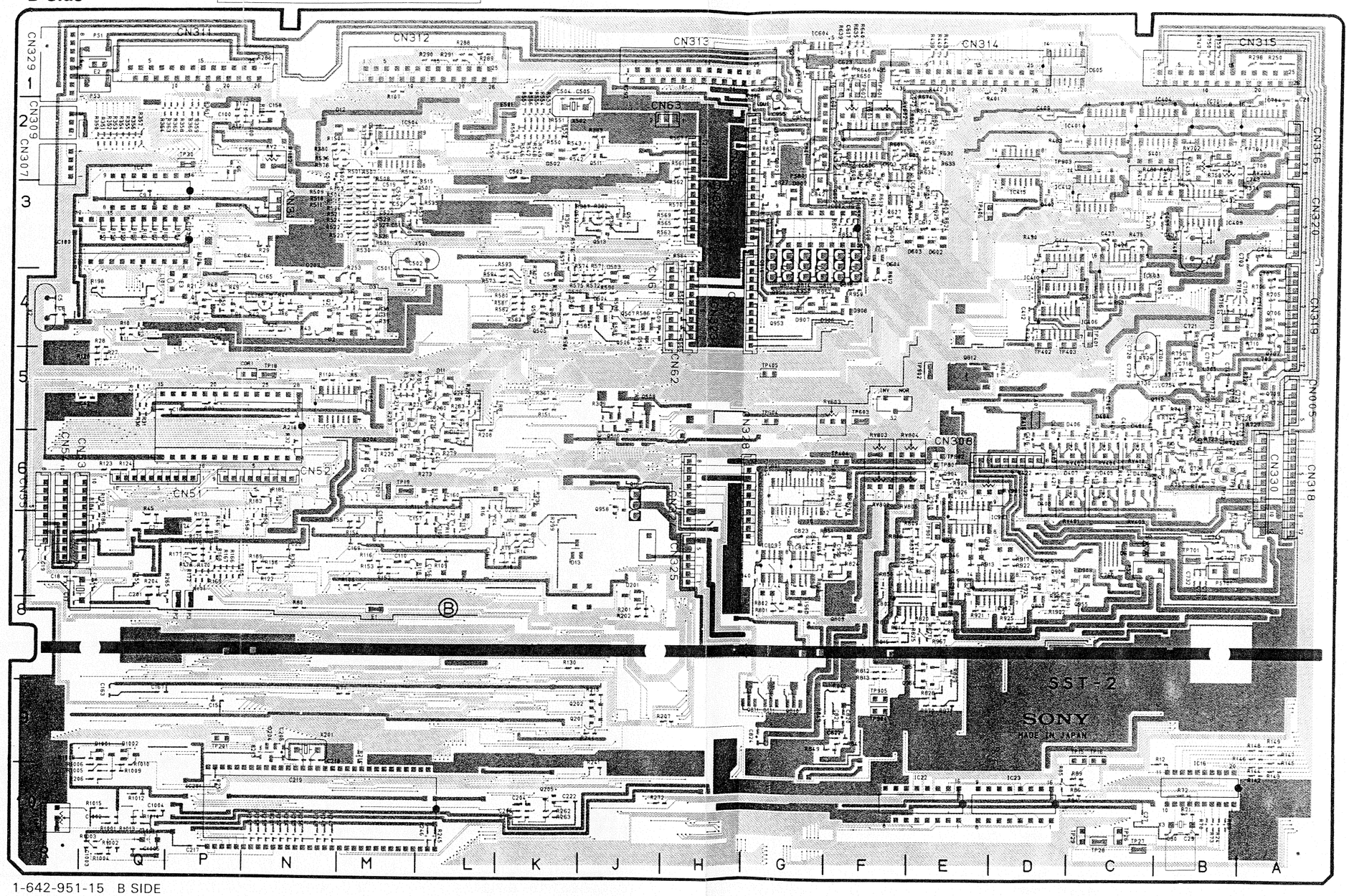

1-642-951-15 B SIDE

B Side is the same as Soldering Side

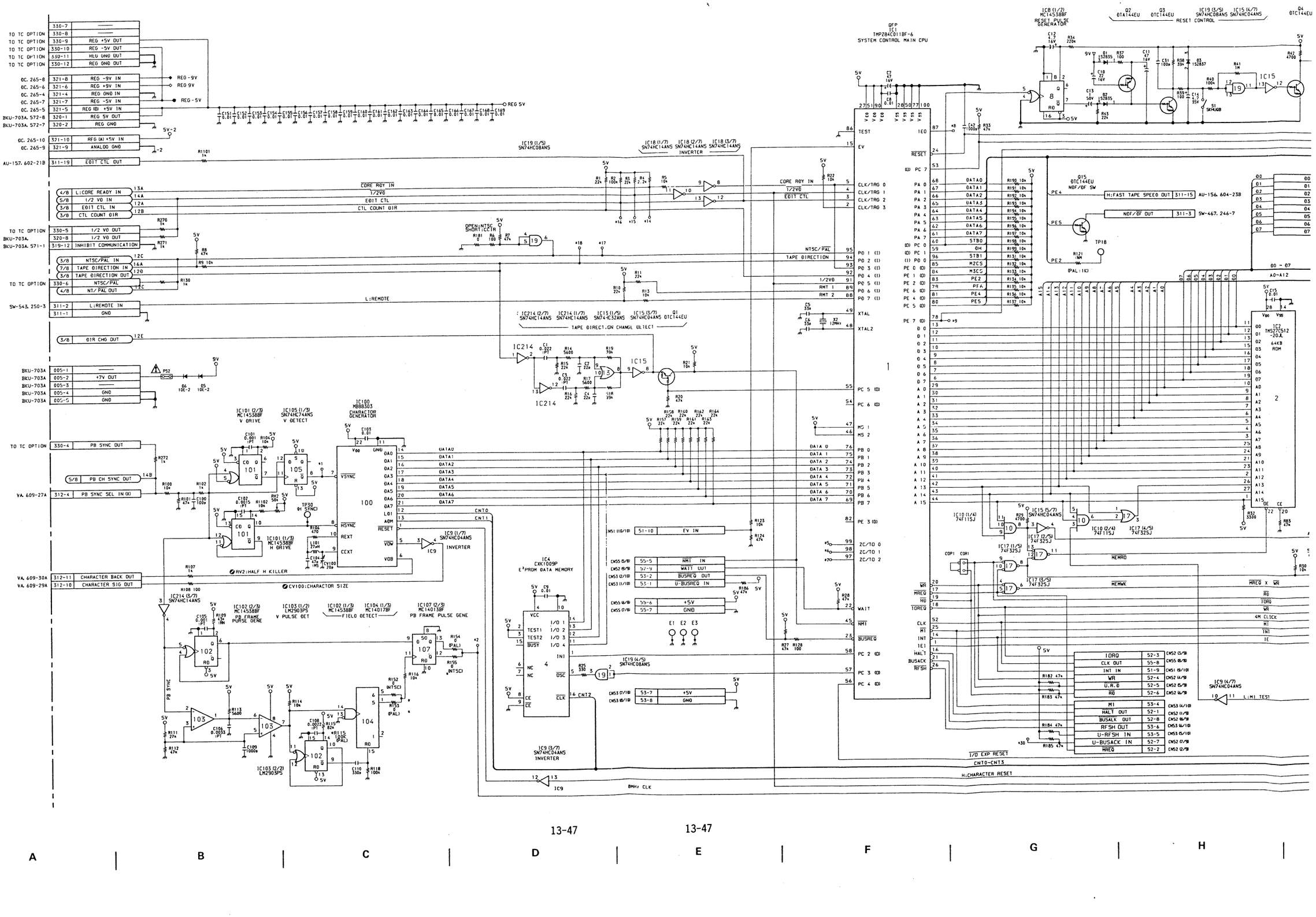

13-47 13-47

A B C D E F G H

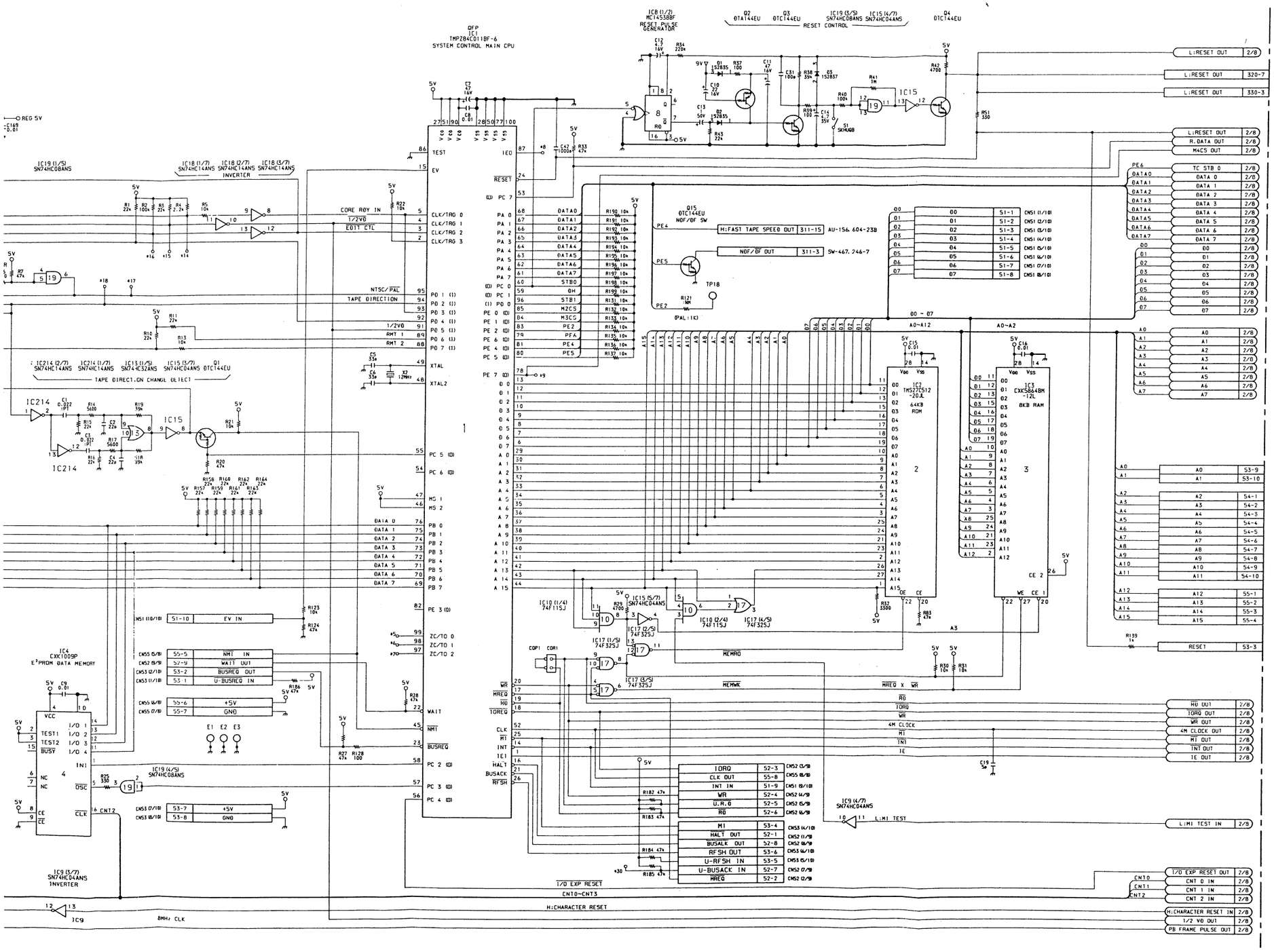

Main System Control

SST-2 BOARD (1/8)

BOARD NO. 1-642-951-13, 14, 15
EVO-9850 (J) : # 10001—
EVO-9850 (UC) : # 10031—

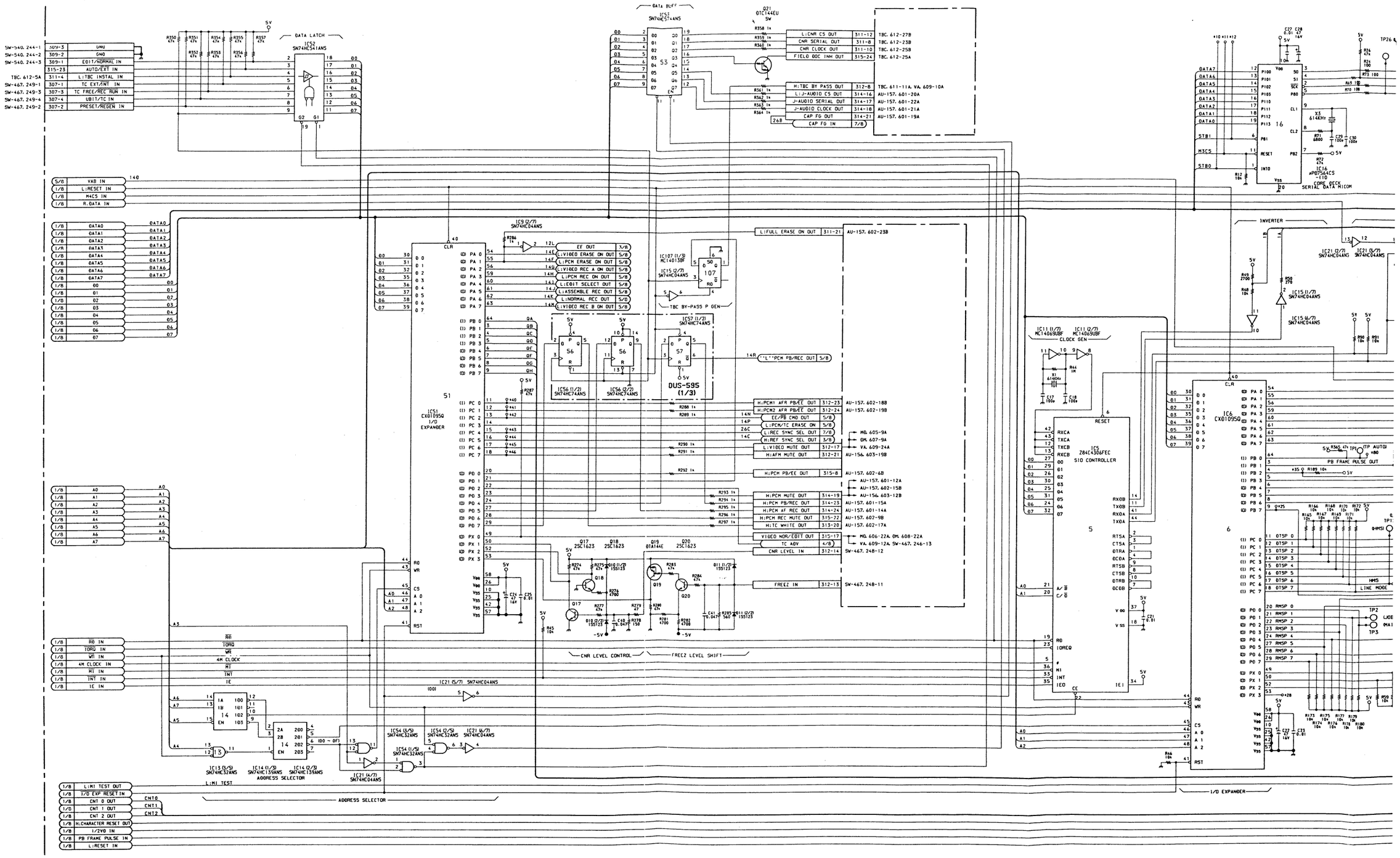
DATA LATCH
IC52 SN74HC541ANS
DATA BUFF
IC53 SN74HC574ANS
Q21 DTC144EU SW
SW-540. 244-1
SW-540. 244-2
SW-540. 244-3
TBC. 612-5A
SW-467. 249-1
SW-467. 249-3
SW-467. 249-4
SW-467. 249-2
309-3 GND
309-2 GND
309-1 EDIT/NORMAL IN
315-23 AUTO/EXT IN
311-4 L:TBC INSTAL IN
307-1 TC EXT/INT IN
307-3 TC FREE/REC RUN IN
307-4 UBIT/TC IN
307-2 PRESET/REGEN IN
L:CNR CS OUT 311-12 TBC. 612-27B
CNR SERIAL OUT 311-8 TBC. 612-23B
CNR CLOCK OUT 311-10 TBC. 612-25B
FIELD ODC INH OUT 315-24 TBC. 612-25A
H:TBC BY PASS OUT 312-8 TBC. 611-11A. VA. 609-10A
L:J-AUDIO CS OUT 314-16 AU-157. 601-20A
J-AUDIO SERIAL OUT 314-17 AU-157. 601-22A
J-AUDIO CLOCK OUT 314-18 AU-157. 601-21A
CAP FG OUT 314-21 AU-157. 601-19A
CAP FG IN 7/8
S/B VAB IN
L:RESET IN
M4CS IN
R:DATA IN
DATA0 DATA1 DATA2 DATA3 DATA4 DATA5 DATA6 DATA7
00 01 02 03 04 05 06 07
A0 A1 A2 A3 A4 A5 A6 A7
IC1 CX01095Q I/O EXPANDER
IC9 (2/7) SN74HC04ANS
EF OUT
L:VIDEO ERASE ON OUT
L:PCM ERASE ON OUT
L:VIDEO REC A ON OUT
L:PCM REC ON OUT
L:EDIT SELECT OUT
L:ASSEMBLE REC OUT
L:NORMAL REC OUT
L:VIDEO REC B ON OUT
IC56 (1/2) SN74HC74ANS
IC56 (2/2) SN74HC74ANS
IC57 (1/2) SN74HC74ANS
DUS-595 (1/3)
IC107 (1/3) MC14013BF
TBC BY-PASS P GEN
L:FULL ERASE ON OUT 311-21 AU-157. 602-23B
"L"PCM PB/REC OUT 5/8
H:PCM1 AFR PB/EE OUT 312-23 AU-157. 602-18B
H:PCM2 AFR PB/EE OUT 312-24 AU-157. 602-19B
EE/PB CMD OUT 5/8
L:PCM/TC ERASE ON 5/8
L:REC SYNC SEL OUT 7/8
H:REF SYNC SEL OUT 5/8
L:VIDEO MUTE OUT 312-17 MG. 605-9A DM. 607-9A VA. 609-24A
H:AFM MUTE OUT 312-21 AU-156. 603-19B
H:PCM PB/EE OUT 315-8 AU-157. 602-6B
AU-157. 601-12A AU-157. 602-15B AU-156. 603-12B
H:PCM MUTE OUT 314-19
H:PCM PB/REC OUT 314-23 AU-157. 601-15A
H:PCM AF REC OUT 314-24 AU-157. 601-14A
H:PCM REC MUTE OUT 315-22 AU-157. 602-9B
H:TC WHITE OUT 313-20 AU-157. 602-17A
VIDEO NOR/EDIT OUT 315-17 MG. 606-22A DM. 608-22A
TC ADV 4/8 VA. 609-12A SW-467. 246-13
CNR LEVEL IN 312-14 SW-467. 248-12
FREEZ IN 312-13 SW-467. 248-11
Q17 2SC1623 Q18 2SC1623 Q19 DTA144E Q20 2SC1623
CNR LEVEL CONTROL
FREEZ LEVEL SHIFT
IC15 (2/7) SN74HC04ANS
IC107 (1/3) MC14013BF
IC21 (2/7) SN74HC04ANS
IC21 (6/7) SN74HC04ANS
IC15 (1/7) SN74HC04ANS
IC15 (6/7) SN74HC04ANS
INVERTER
IC11 (1/7) MC14069UBF
IC11 (2/7) MC14069UBF
CLOCK GEN
IC6 CX01095Q
IC5 Z84C4306FEC SIO CONTROLLER
RESET
RXCA TXCA TXCB RXCB
RXDB TXDB RXDA TXDA
RTSA CTSA DTRA DCDA RTSB CTSB DTRB DCDB
IC16 μPD7564CS -110 CORD DECK SERIAL DATA MICOM
X1 6.144MHz
X5 614KHz
DATA7 DATA6 DATA5 DATA4 DATA3 DATA2 DATA1 DATA0
STB1 M3CS STB0
P100 P101 P102 P103 P110 P111 P112 P113
CL1 CL2 PB1 RESET PB2 INT0
Vcc Vss
TP26
PB FRAME PULSE OUT
TP1 TP2 TP3
0HMSI HMS LINE MODE
RMSP 0 RMSP 1 RMSP 2 RMSP 3 RMSP 4 RMSP 5 RMSP 6 RMSP 7
DTSP 0 DTSP 1 DTSP 2 DTSP 3 DTSP 4 DTSP 5 DTSP 6 DTSP 7
IC13 (3/5) SN74HC32ANS
IC14 (1/3) SN74HC139ANS
IC14 (2/3) SN74HC139ANS
ADDRESS SELECTOR
IC21 (4/7) SN74HC04ANS
IC54 (3/5) SN74HC32ANS
IC54 (2/5) SN74HC32ANS
IC54 (1/5) SN74HC32ANS
IC21 (6/7) SN74HC04ANS
L:MI TEST
I/O EXPANDER
L:MI TEST OUT
I/O EXP RESET IN
CNT 0 OUT
CNT 1 OUT
CNT 2 OUT
H:CHARACTER RESET OUT
1/2V0 IN
PB FRAME PULSE IN
L:RESET IN
CNT0 CNT1 CNT2
RD WR IORQ M1 INT IEO IEI
4M CLOCK
ADDRESS SELECTOR

A B C D E F G H

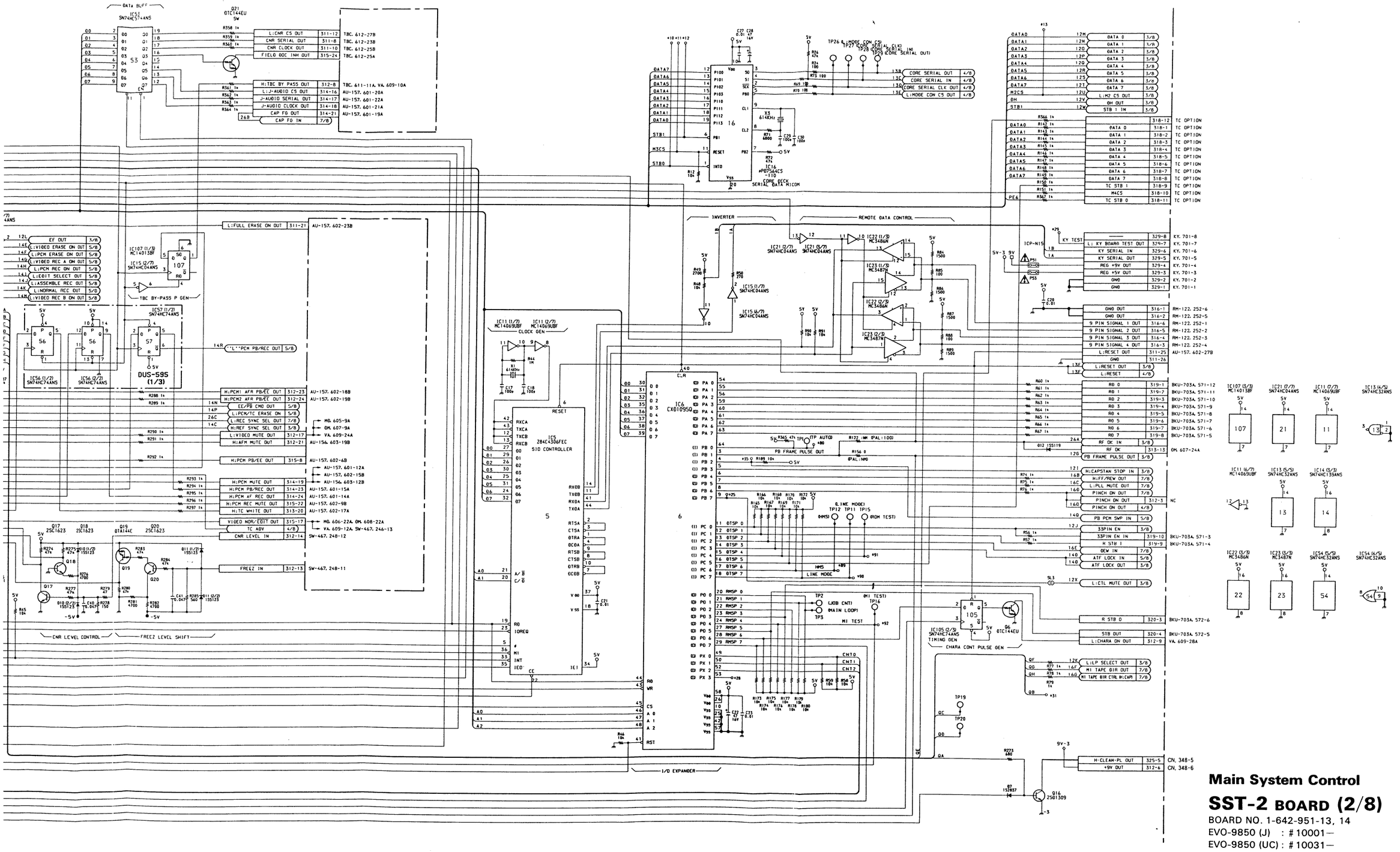

Main System Control

SST-2 BOARD (2/8)

BOARD NO. 1-642-951-13, 14
EVO-9850 (J) : #10001—
EVO-9850 (UC) : #10031—

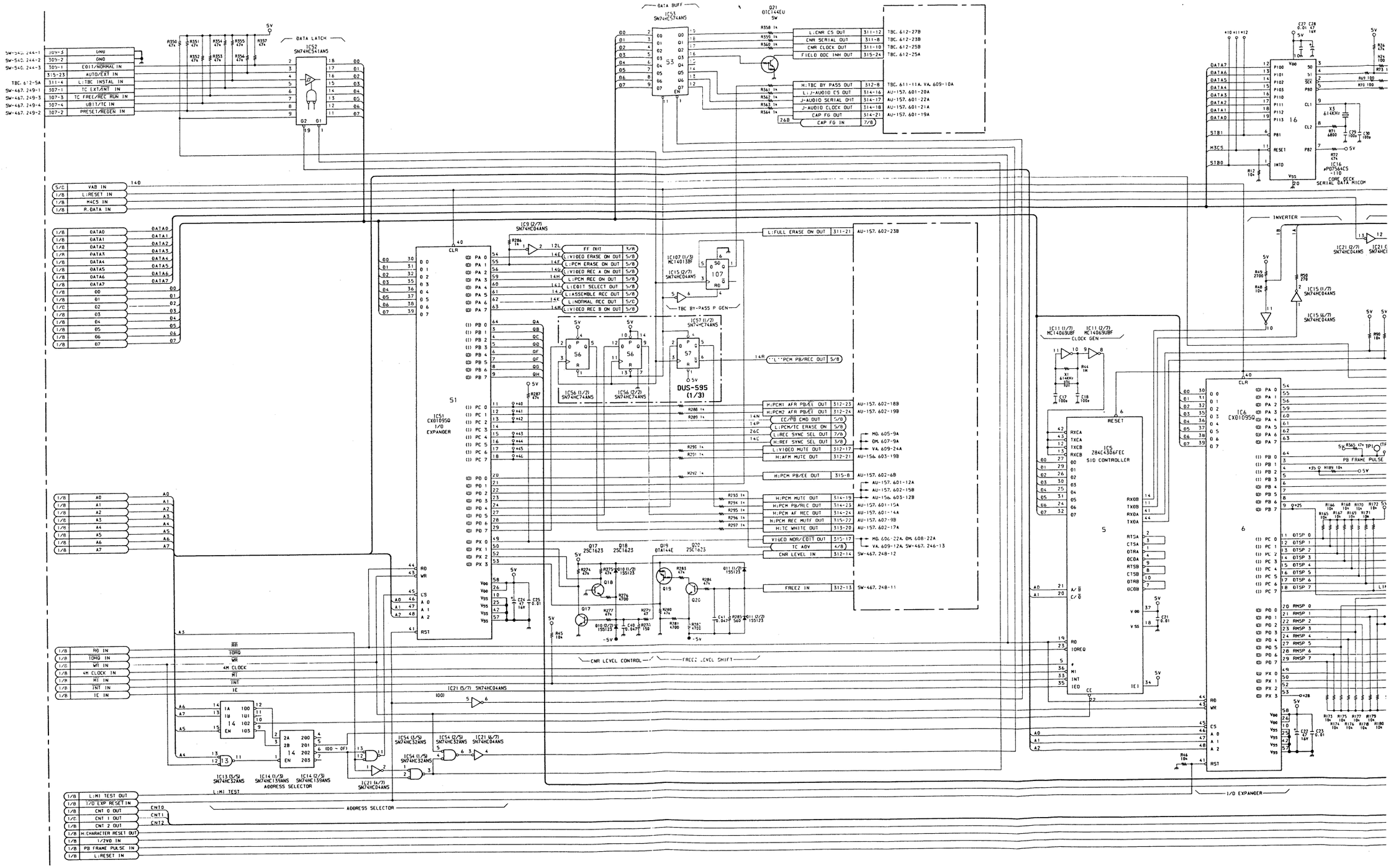

13-49(a) 13-49(a)

A B C D E F G H

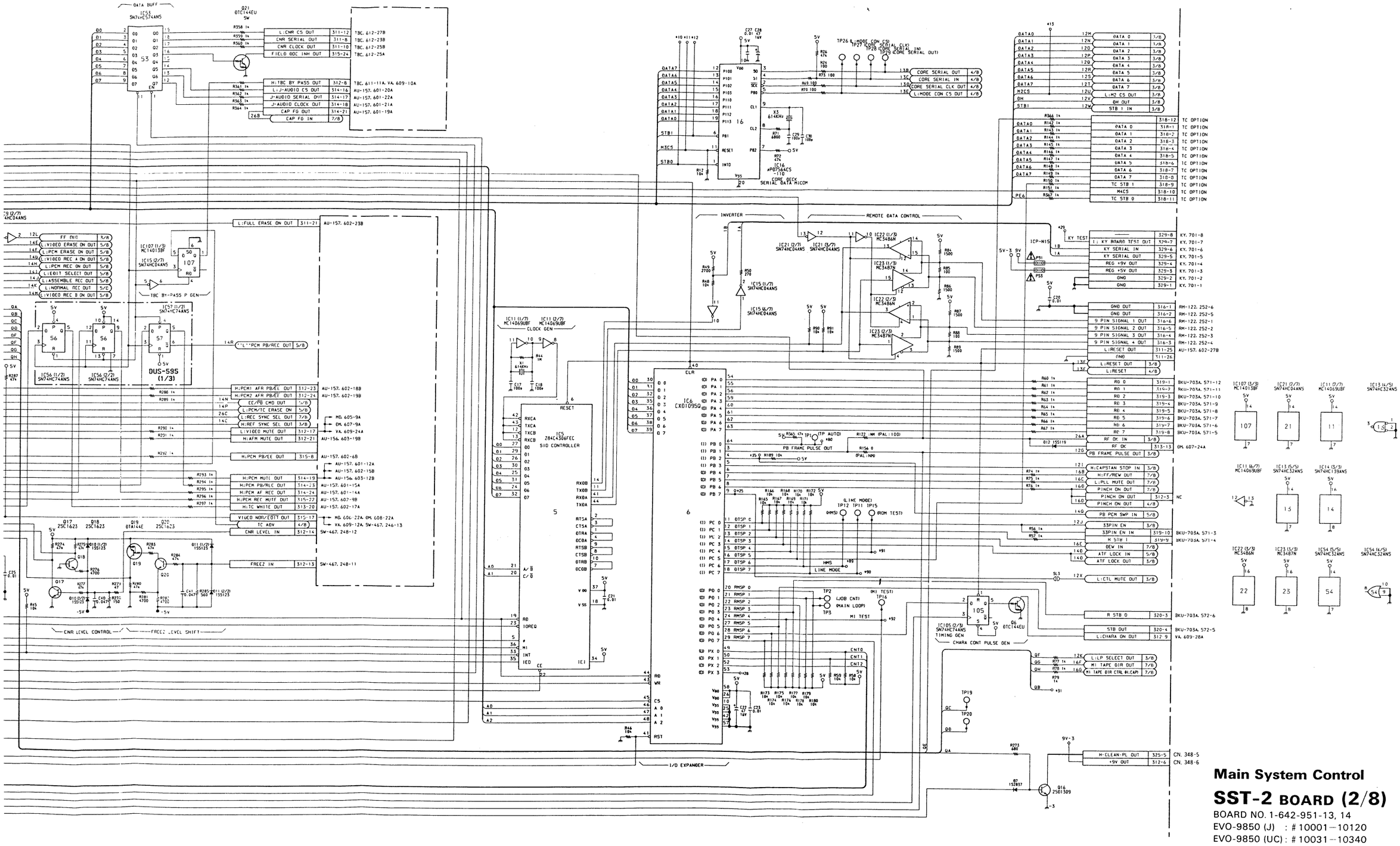

Main System Control

SST-2 BOARD (2/8)

BOARD NO. 1-642-951-13, 14
EVO-9850 (J) : # 10001—10120
EVO-9850 (UC) : # 10031—10340

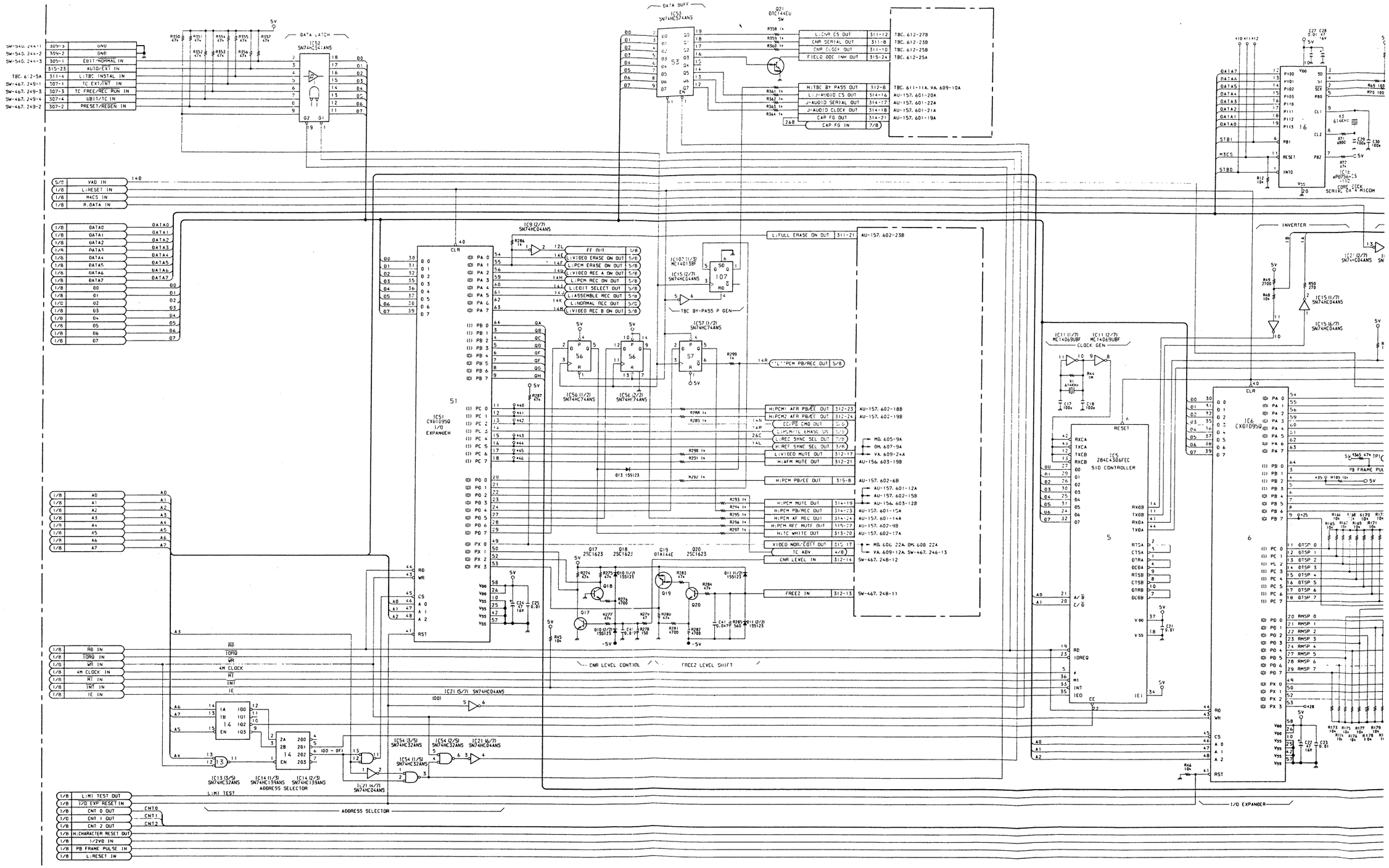

13-49(b) 13-49(b)

A B C D E F G H

Main System Control

SST-2 BOARD (2/8)

BOARD NO. 1-642-951-15
EVO-9850 (J) : # 10121–
EVO-9850 (UC) : # 10341 –

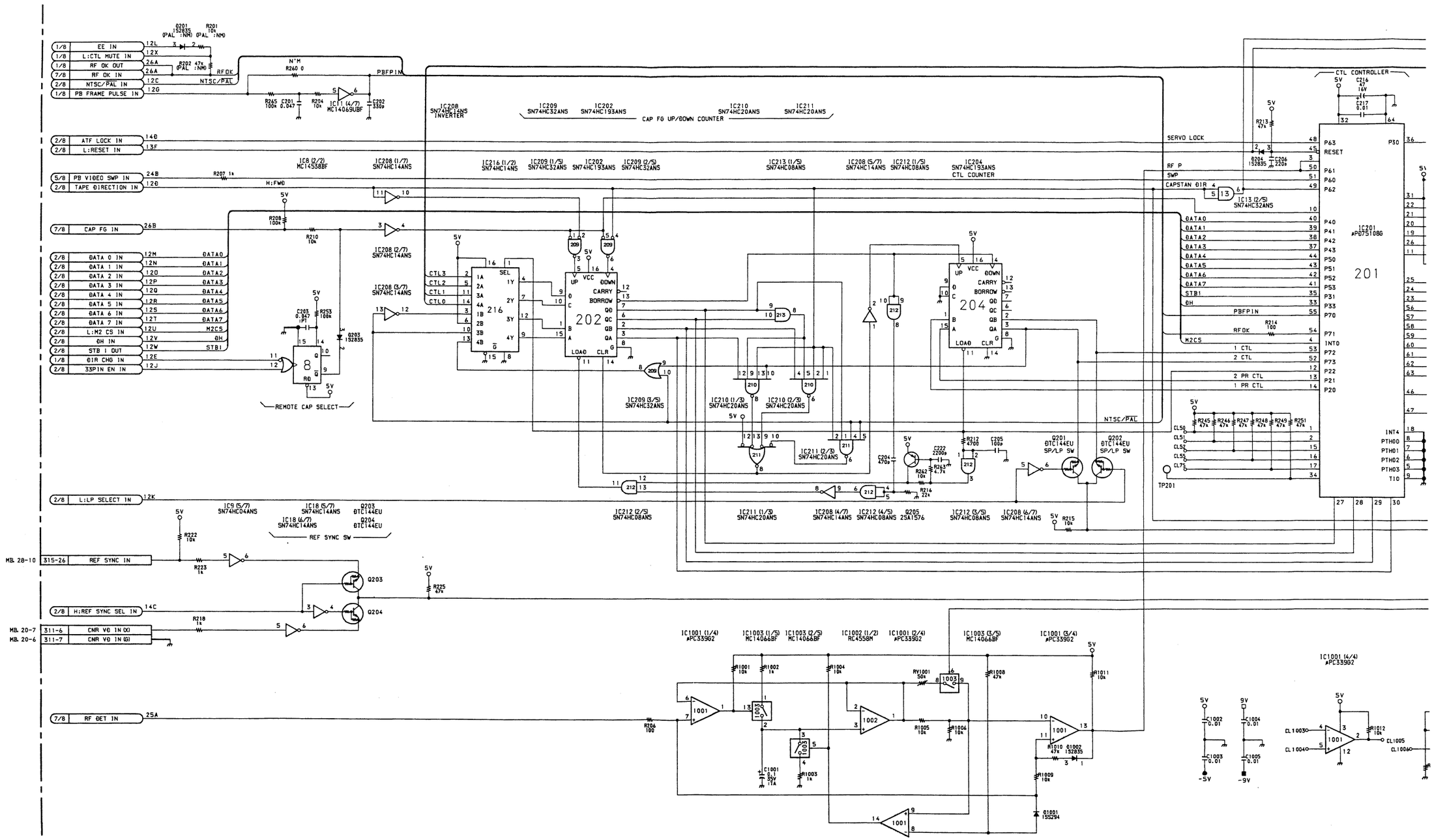
EE IN
L:CTL MUTE IN
RF OK OUT
RF OK IN
NTSC/PAL IN
PB FRAME PULSE IN
ATF LOCK IN
L:RESET IN
PB VIDEO SWP IN
TAPE DIRECTION IN
CAP FG IN
DATA 0 IN
DATA 1 IN
DATA 2 IN
DATA 3 IN
DATA 4 IN
DATA 5 IN
DATA 6 IN
DATA 7 IN
L:M2 CS IN
DH IN
STB I OUT
DIR CHG IN
33PIN EN IN
L:LP SELECT IN
REF SYNC IN
H:REF SYNC SEL IN
CNR V0 IN (X)
CNR V0 IN (Y)
RF DET IN
REMOTE CAP SELECT
REF SYNC SW
CAP FG UP/DOWN COUNTER
CTL CONTROLLER
SERVO LOCK
RF P
SWP
CAPSTAN DIR
NTSC/PAL
PBFPIN
RFOK
M2CS
1 CTL
2 CTL
2 PR CTL
1 PR CTL
TP201

A | B | C | D | E | F | G | H

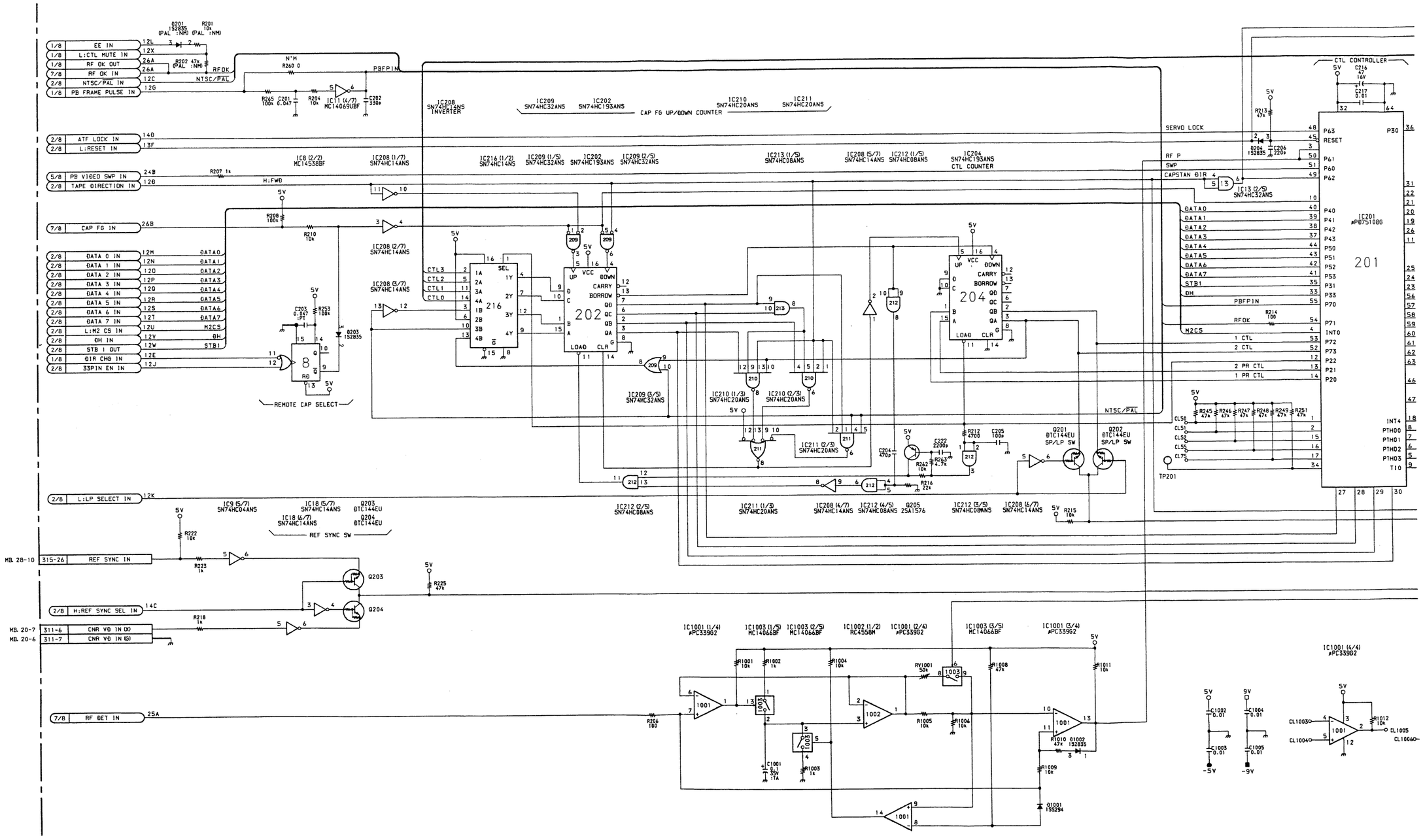

13-51 13-51

A | B | C | D | E | F | G | H

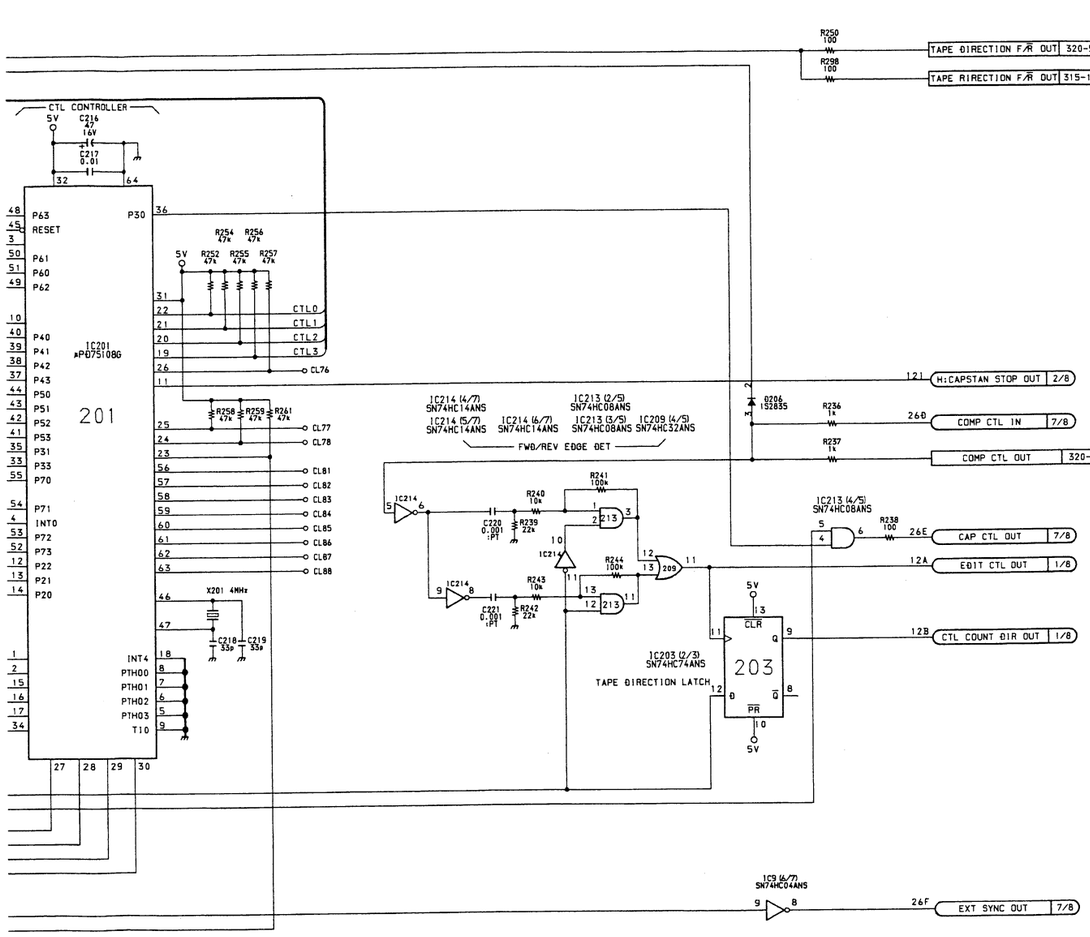

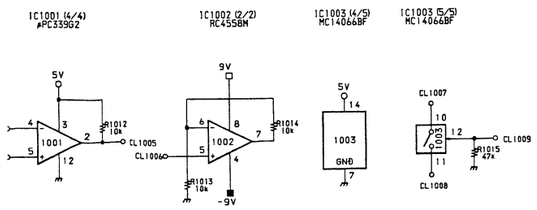

NOTE;NM IS NOT MOUNTED

CTL Count Conpensator

SST-2 BOARD (3/8)

BOARD NO. 1-642-951-13, 14, 15
EVO-9850 (J) : # 10001—
EVO-9850 (UC) : # 10031—

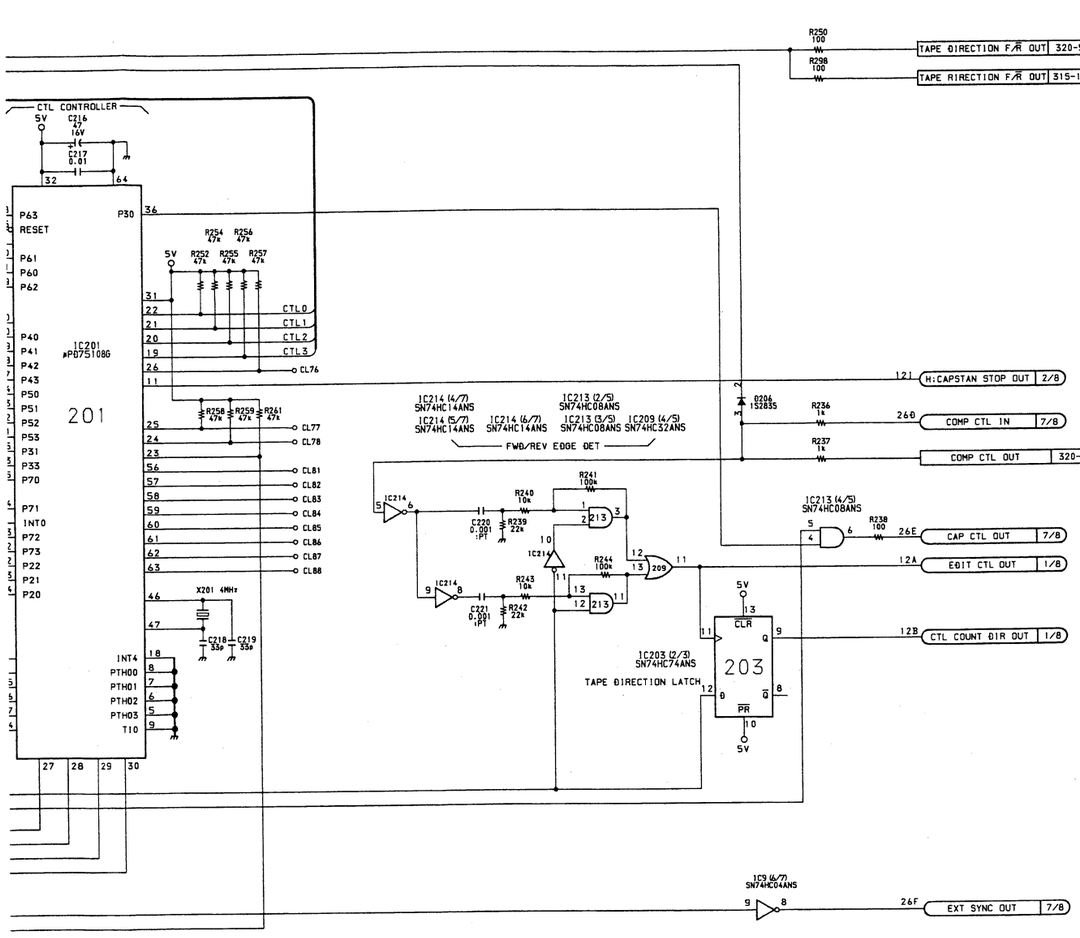

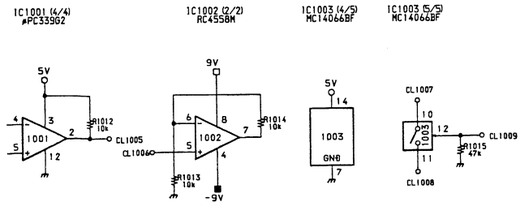

NOTE;NM IS NOT MOUNTED

CTL Count Conpensator

SST-2 BOARD (3/8)

BOARD NO. 1-642-951-13, 14
EVO-9850 (J) : # 10001—
EVO-9850 (UC) : # 10031—

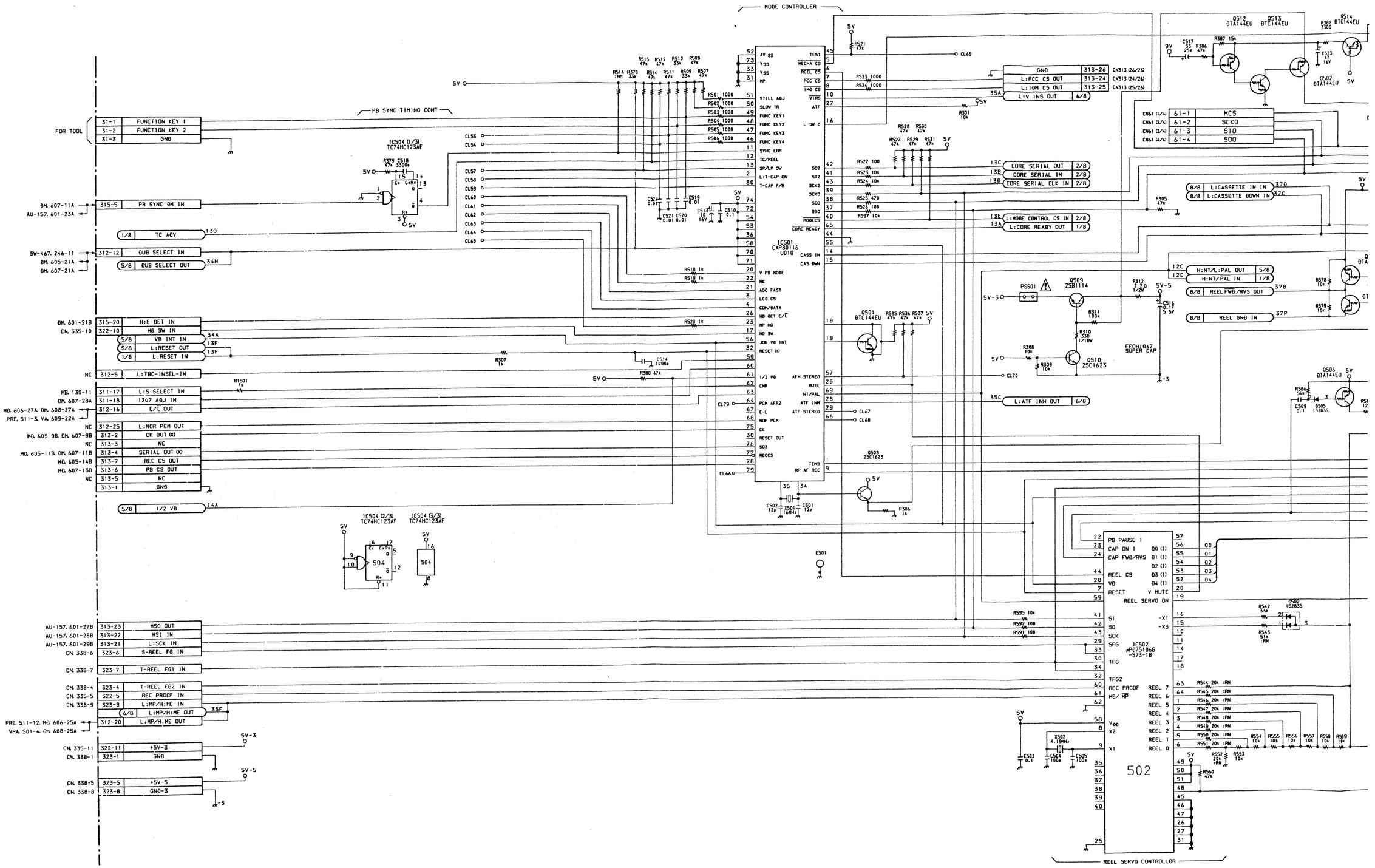

13-53 13-53

A B C D E F G H

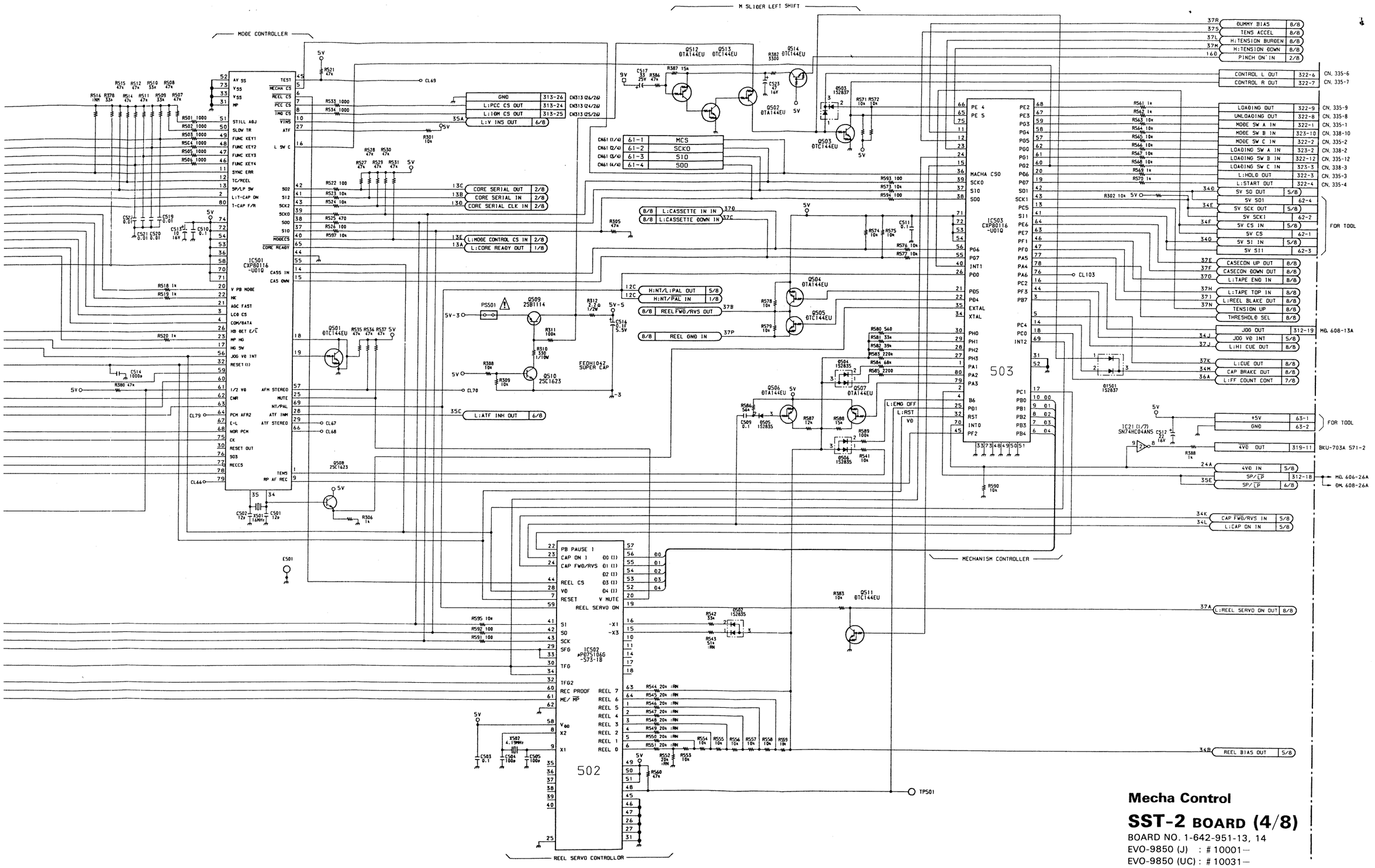
MODE CONTROLLER
M SLIDER LEFT SHIFT
IC501 CXP80116 -U01Q
IC502 μPD75106G -573-1B
IC503 CXP80116 -U01Q
MECHANISM CONTROLLER
REEL SERVO CONTROLLOR
FOR TOOL
MD, 608-26A
MD, 606-26A
BKU-703A 571-2
Q501 DTC144EU
Q502 DTA144EU
Q503 DTC144EU
Q504 DTA144EU
Q505 DTC144EU
Q506 DTA144EU
Q507 DTA144EU
Q508 2SC1623
Q509 2SB1114
Q510 2SC1623
Q511 DTC144EU
Q512 DTA144EU
Q513 DTC144EU
Q514 DTC144EU
Q501 1S2837
Q502 1S2835
Q503 1S2837
Q504 1S2835
Q505 1S2835
Q506 1S2835
Q507 DTA144EU
PS501
FEDH1042 SUPER CAP
ES01
TP501
CL66
CL67
CL68
CL69
CL70
CL79
CL103
CN313 (26/26)
CN313 (24/26)
CN313 (25/26)
CN61 (1/4)
CN61 (2/4)
CN61 (3/4)
CN61 (4/4)
GND 313-26
L:PCC CS OUT 313-24
L:10M CS OUT 313-25
L:V INS OUT 6/8
MCS 61-1
SCKO 61-2
SIO 61-3
SOO 61-4
CORE SERIAL OUT 2/8
CORE SERIAL IN 2/8
CORE SERIAL CLK IN 2/8
L:MODE CONTROL CS IN 2/8
L:CORE READY OUT 1/8
L:CASSETTE IN IN 8/8
L:CASSETTE DOWN IN 8/8
H:NT/L:PAL OUT 5/8
H:NT/PAL IN 1/8
REEL FWD/RVS OUT 8/8
REEL GND IN 8/8
L:ATF INH OUT 6/8
L:EMG OFF
L:RST
DUMMY BIAS 8/8
TENS ACCEL 8/8
H:TENSION BURDEN 8/8
H:TENSION DOWN 8/8
PINCH ON' IN 2/8
CONTROL L OUT 322-6
CONTROL R OUT 322-7
LOADING OUT 322-9
UNLOADING OUT 322-8
MODE SW A IN 322-1
MODE SW B IN 323-10
MODE SW C IN 322-2
LOADING SW A IN 323-2
LOADING SW B IN 322-12
LOADING SW C IN 323-3
L:HOLD OUT 322-3
L:START OUT 322-4
5V SO OUT 5/8
5V SI 62-4
5V SCK OUT 5/8
5V SCK 62-2
5V CS IN 5/8
5V CS 62-1
5V SI IN 5/8
5V SI 62-3
CASECON UP OUT 8/8
CASECON DOWN OUT 8/8
L:TAPE END IN 8/8
L:TAPE TOP IN 8/8
L:REEL BLAKE OUT 8/8
TENSION UP 8/8
THRESHOLD SEL 8/8
JOG OUT 312-19
JOG V0 INT 5/8
L:HI CUE OUT 8/8
L:CUE OUT 8/8
CAP BRAKE OUT 8/8
L:FF COUNT CONT 7/8
+5V 63-1
GND 63-2
4V0 OUT 319-11
4V0 IN 5/8
SP/LP 312-18
SP/LP 6/8
CAP FWD/RVS IN 5/8
L:CAP ON IN 5/8
L:REEL SERVO ON OUT 8/8
REEL BIAS OUT 5/8
MCS
SCKO
SIO
SOO
MACHA CSO
JNT1
PD0
PD5
PD4
EXTAL
XTAL
PH0
PH1
PH2
PH3
PA1
PA2
PA3
B6
PD1
RST
INT0
PF2
PE4
PE5
PE2
PE3
PG3
PG4
PG5
PG0
PG1
PG2
PG6
PG7
SI1
PE6
PE7
PF1
PF0
PA5
PA4
PA6
PC2
PF3
PB7
PC4
PC0
INT2
PC1
PB0
PB1
PB2
PB3
PB4
PE 4
PE 5
503
502
Mecha Control
SST-2 BOARD (4/8)
BOARD NO. 1-642-951-13, 14
EVO-9850 (J) : # 10001—
EVO-9850 (UC) : # 10031—

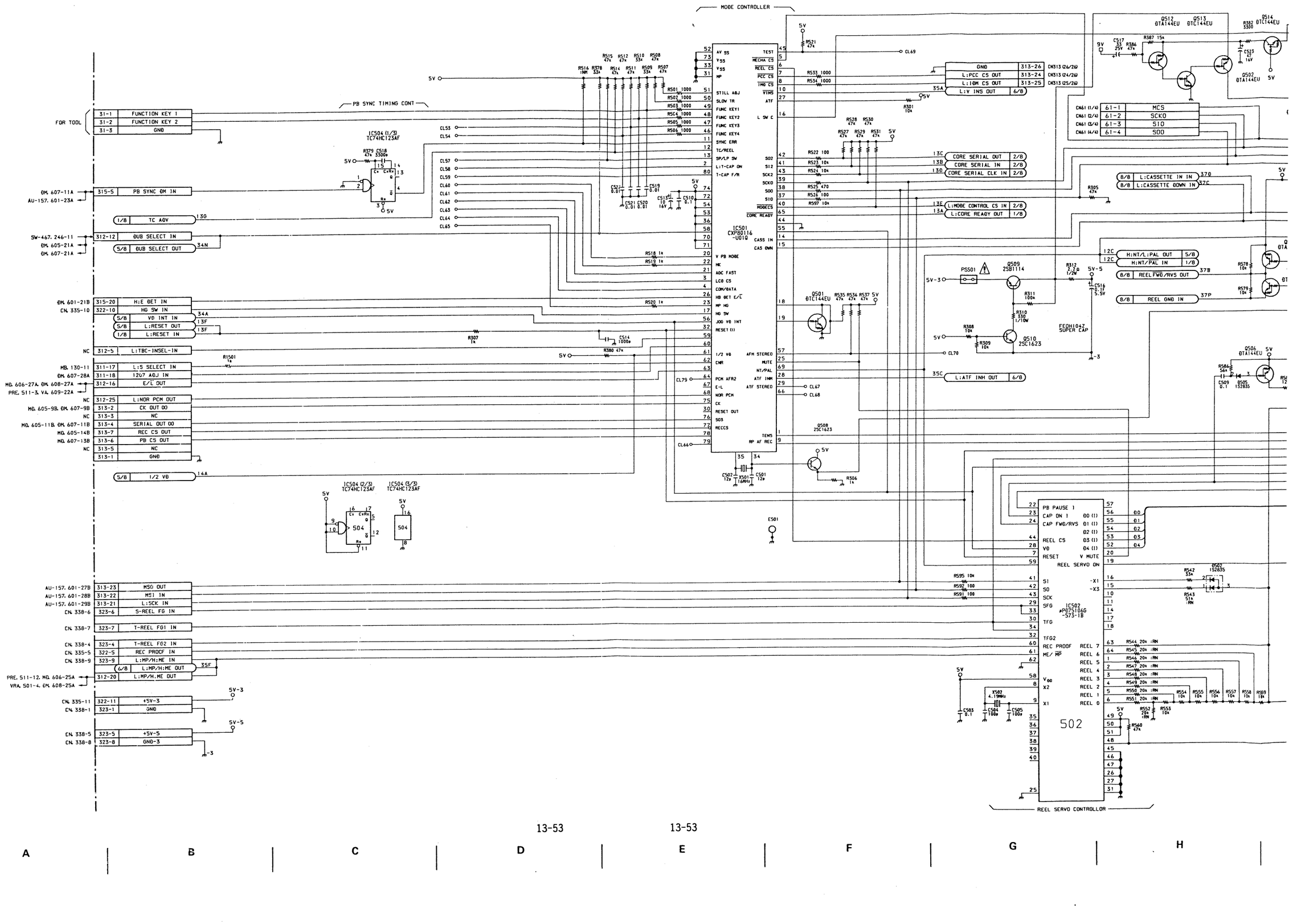
MODE CONTROLLER
M SLIDER LEFT SHIFT
PB SYNC TIMING CONT
FOR TOOL
31-1 FUNCTION KEY 1
31-2 FUNCTION KEY 2
31-3 GND
ØM. 607-11A
AU-157. 601-23A
315-5 PB SYNC ØM IN
1/8 TC AØV
SW-467. 246-11
ØM. 605-21A
ØM. 607-21A
312-12 ØUB SELECT IN
5/8 ØUB SELECT OUT
ØM. 601-21B
CN. 335-10
315-20 H:E ØET IN
322-10 HG SW IN
5/8 VØ INT IN
5/8 L:RESET OUT
1/8 L:RESET IN
NC 312-5 L:TBC-INSEL-IN
MB. 130-11
ØM. 607-28A
311-17 L:S SELECT IN
311-18 12Ø7 ADJ IN
MØ. 606-27A. ØM. 608-27A
PRE. 511-3. VA. 609-22A
312-16 E/L OUT
NC 312-25 L:NOR PCM OUT
MØ. 605-9B. ØM. 607-9B
313-2 CK OUT ØØ
NC 313-3 NC
MØ. 605-11B. ØM. 607-11B
313-4 SERIAL OUT ØØ
MØ. 605-14B
313-7 REC CS OUT
MØ. 607-13B
313-6 PB CS OUT
NC 313-5 NC
313-1 GND
5/8 1/2 VØ
AU-157. 601-27B
AU-157. 601-28B
AU-157. 601-29B
CN. 338-6
313-23 MSØ OUT
313-22 MS1 IN
313-21 L:SCK IN
323-6 S-REEL FG IN
CN. 338-7
323-7 T-REEL FG1 IN
CN. 338-4
CN. 335-5
CN. 338-9
323-4 T-REEL FG2 IN
322-5 REC PROOF IN
323-9 L:MP/H:ME IN
6/8 L:MP/H:ME OUT
PRE. 511-12. MØ. 606-25A
VRA. 501-4. ØM. 608-25A
312-20 L:MP/H.ME OUT
CN. 335-11
CN. 338-1
322-11 +5V-3
323-1 GND
CN. 338-5
CN. 338-8
323-5 +5V-5
323-8 GND-3
IC504 (1/3) TC74HC123AF
IC504 (2/3) TC74HC123AF
IC504 (3/3) TC74HC123AF
IC501 CXP80116 -U01Q
IC502 μPD751060 -573-1B
REEL SERVO CONTROLLOR
Q501 DTC144EU
Q502 DTA144EU
Q503 2SB1114
Q504 DTC144EU
Q505 2SB1114
Q506 DTA144EU
Q507 1SZ835
Q508 2SC1623
Q509 2SB1114
Q510 2SC1623
Q512 DTA144EU
Q513 DTC144EU
Q514 DTC144EU
PS501
X501 16MHz
X502 4.19MHz
CN313 (26/28) GND 313-26
CN313 (24/28) L:PCC CS OUT 313-24
CN313 (25/28) L:IOM CS OUT 313-25
35A L:V INS OUT 6/8
CN61 (1/4) 61-1 MCS
CN61 (2/4) 61-2 SCKO
CN61 (3/4) 61-3 SIO
CN61 (4/4) 61-4 SOO
13C CORE SERIAL OUT 2/8
13B CORE SERIAL IN 2/8
13D CORE SERIAL CLK IN 2/8
13E L:MODE CONTROL CS IN 2/8
13A L:CORE READY OUT 1/8
8/8 L:CASSETTE IN IN 37D
8/8 L:CASSETTE DOWN IN 37C
12C H:NT/L:PAL OUT 5/8
12C H:NT/PAL IN 1/8
8/8 REEL FWD/RVS OUT 37B
8/8 REEL GND IN 37P
35C L:ATF INH OUT 6/8
FEQH1047 SUPER CAP
5V
5V-3
5V-5
9V
CL53 CL54 CL57 CL58 CL59 CL60 CL61 CL62 CL63 CL64 CL65
CL66 CL67 CL68 CL69 CL70 CL79
R501 1000
R502 1000
R503 1000
R504 1000
R505 1000
R506 1000
R507 47k
R508 47k
R509 33k
R510 33k
R511 47k
R512 47k
R514 47k
R515 47k
R516 1MM 33k
R518 1k
R519 1k
R520 1k
R521 47k
R522 100
R523 10k
R524 10k
R525 470
R526 100
R527 47k
R528 47k
R529 47k
R530 47k
R531 47k
R533 1000
R534 1000
R535 47k
R536 47k
R537 47k
R1501 1k
R307 1k
R379 47k
R380 47k
R301 10k
R305 47k
R306 1k
R308 10k
R309 10k
R310 330 1/10W
R311 100k
R312 2.2Ω 1/2W
R382 330Ω
R386 47k
R387 15k
R542 33k
R543 51k 1MM
R544 20k 1MM
R545 20k 1MM
R546 20k 1MM
R547 20k 1MM
R548 20k 1MM
R549 20k 1MM
R550 20k 1MM
R551 20k 1MM
R552 20k 1MM
R553 10k
R554 10k
R555 10k
R556 10k
R557 10k
R558 10k
R559 10k
R560 47k
R570 10k
R578 10k
C501 12p
C502 12p
C503 0.1
C504 100p
C505 100p
C509 0.1
C510 0.1
C511 10 16V
C514 1000p
C516 0.1F 5.5V
C517 33 25V
C518 3300p
C519 0.01
C520 0.01
C521 0.01
C523 22 16V
C527 0.01
ES01
PB PAUSE 1
CAP ON 1
CAP FWD/RVS
REEL CS
VØ
RESET
REEL SERVO ON
SI
SO
SCK
SFG
TFG
TFG2
REC PROOF
ME/ MP
V MUTE
-X1
-X3
REEL 7
REEL 6
REEL 5
REEL 4
REEL 3
REEL 2
REEL 1
REEL 0
AV SS
VSS
VSS
MP
STILL ADJ
SLOW TR
FUNC KEY1
FUNC KEY2
FUNC KEY3
FUNC KEY4
SYNC ERR
TC/REEL
SP/LP SW
L.I.T-CAP ON
I-CAP F/R
SO2
SI2
SCK2
SCKO
SOO
SIO
MODECS
CORE READY
CASS IN
CAS OWN
V PB MODE
HK
AQC FAST
LCØ CS
COM/DATA
MB ØET E/L
MP HG
HG SW
JOG VØ INT
RESET (1)
1/2 VØ
CMR
PCM AFR2
E-L
NOR PCM
CK
RESET OUT
SOS
RECCS
AFM STEREO
MUTE
NT/PAL
ATF INH
ATF STEREO
TEMS
RP AF REC
TEST
MECHA CS
REEL CS
PCC CS
IMØ CS
VINS
ATF
L SW C

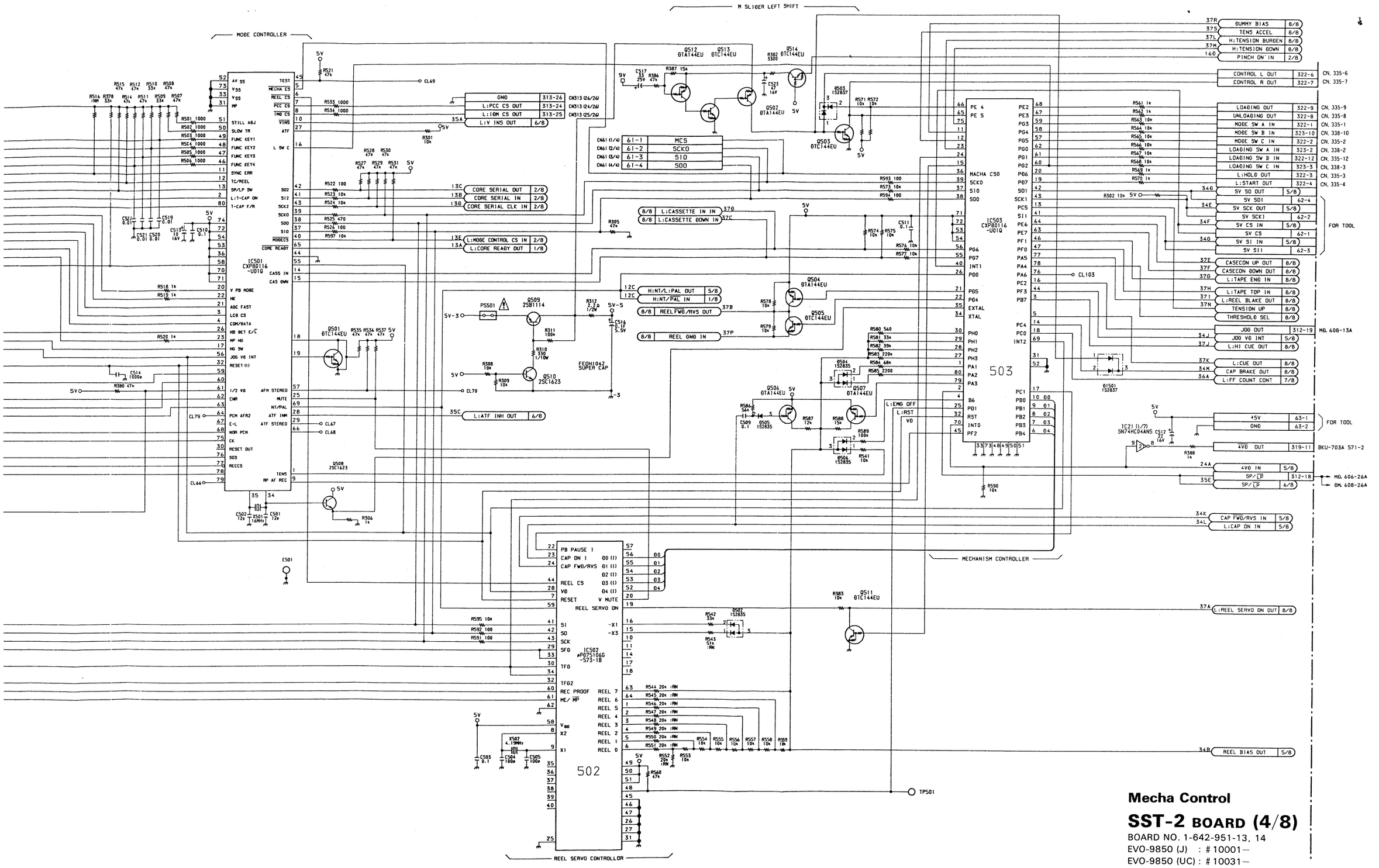
MODE CONTROLLER
M SLIDER LEFT SHIFT
IC501 CXP80116 -U01Q
IC502 μPD75106G -573-1B
502
503
IC503 CXP80116 -U01Q
MECHANISM CONTROLLER
REEL SERVO CONTROLLER
GND 313-26 CN313 (26/26)
L:PCC CS OUT 313-24 CN313 (24/26)
L:10M CS OUT 313-25 CN313 (25/26)
L:V INS OUT 6/8
CORE SERIAL OUT 2/8
CORE SERIAL IN 2/8
CORE SERIAL CLK IN 2/8
L:MODE CONTROL CS IN 2/8
L:CORE READY OUT 1/8
L:CASSETTE IN IN 8/8
L:CASSETTE DOWN IN 8/8
H:NT/L:PAL OUT 5/8
H:NT/PAL IN 1/8
REEL FWD/RVS OUT 8/8
REEL GND IN 8/8
MCS
SCKO
SIO
SOO
DUMMY BIAS 8/8
TENS ACCEL 8/8
H:TENSION BURDEN 8/8
H:TENSION DOWN 8/8
PINCH ON' IN 2/8
CONTROL L OUT 322-6 CN, 335-6
CONTROL R OUT 322-7 CN, 335-7
LOADING OUT 322-9 CN, 335-9
UNLOADING OUT 322-8 CN, 335-8
MODE SW A IN 322-1 CN, 335-1
MODE SW B IN 323-10 CN, 338-10
MODE SW C IN 322-2 CN, 335-2
LOADING SW A IN 323-2 CN, 338-2
LOADING SW B IN 322-12 CN, 335-12
LOADING SW C IN 323-3 CN, 338-3
L:HOLD OUT 322-3 CN, 335-3
L:START OUT 322-4 CN, 335-4
SV SO OUT 5/8
SV SDI 62-4
SV SCK OUT 5/8
SV SCKI 62-2
SV CS IN 5/8
SV CS 62-1
SV SI IN 5/8
SV SII 62-3
FOR TOOL
CASECON UP OUT 8/8
CASECON DOWN OUT 8/8
L:TAPE END IN 8/8
L:TAPE TOP IN 8/8
L:REEL BLAKE OUT 8/8
TENSION UP 8/8
THRESHOLD SEL 8/8
JOG OUT 312-19 MD, 608-13A
JOG V0 INT 5/8
L:HI CUE OUT 8/8
L:CUE OUT 8/8
CAP BRAKE OUT 8/8
L:FF COUNT CONT 7/8
+5V 63-1
GND 63-2
FOR TOOL
4V0 OUT 319-11 BKU-703A 571-2
4V0 IN 5/8
SP/LP 312-18 MD, 606-26A DM, 608-26A
SP/LP 6/8
CAP FWD/RVS IN 5/8
L:CAP ON IN 5/8
L:REEL SERVO ON OUT 8/8
REEL BIAS OUT 5/8
TPS01
L:EMG OFF
L:RST
V0
PSS01
E501
Q501 DTC144EU
Q502 DTA144EU
Q503 152837
Q504 DTA144EU
Q505 DTC144EU
Q506 DTA144EU
Q507 DTA144EU
Q508 2SC1623
Q509 2SB1114
Q510 2SC1623
Q511 DTC144EU
Q512 DTA144EU
Q513 DTC144EU
Q514 DTC144EU
Q501 152837
Q502 152837
Q503 152837
Q504 152837
Q505 152835
Q506 152835
EEDH1047 SUPER CAP
X501 16MHz
X502 4.19MHz
IC521 (1/7) SN74HC04ANS
Mecha Control
SST-2 BOARD (4/8)
BOARD NO. 1-642-951-13, 14
EVO-9850 (J) : # 10001—
EVO-9850 (UC) : # 10031—

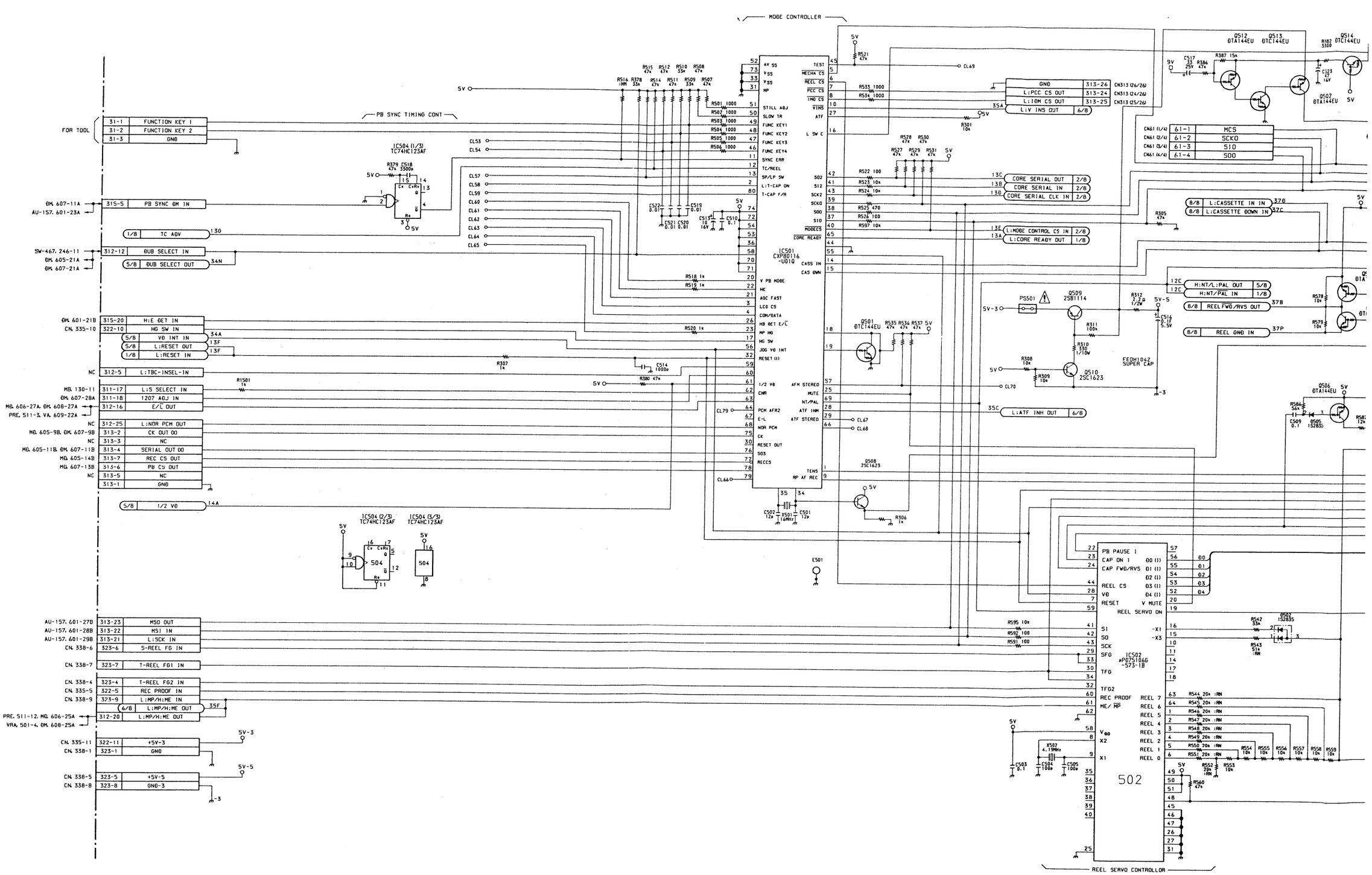

13-53(a) 13-53(a)

A B C D E F G H

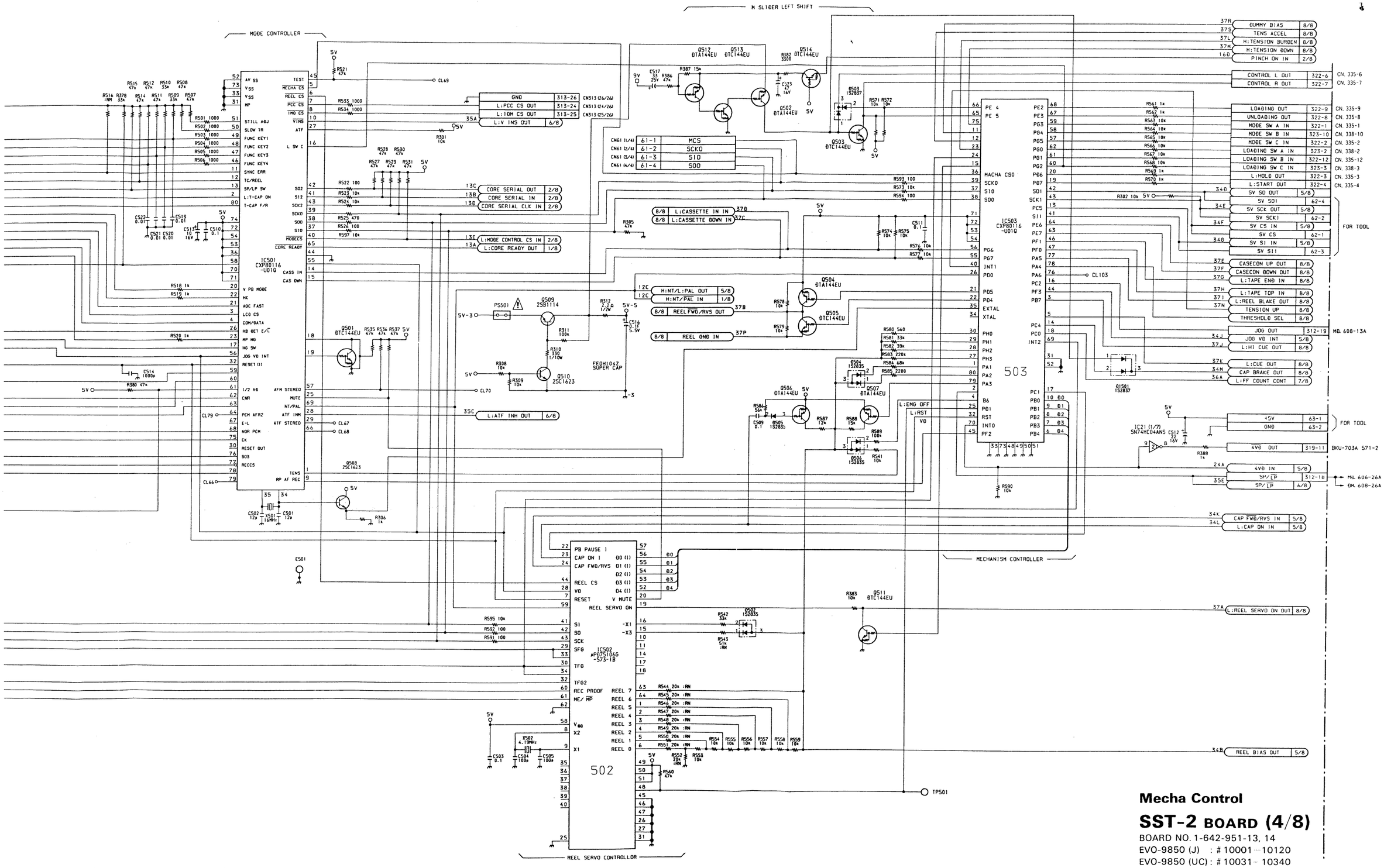
M SLIDER LEFT SHIFT
MODE CONTROLLER
MECHANISM CONTROLLER
REEL SERVO CONTROLLER
IC501 CXP80116 -U01Q
IC503 CXP80116 -U01Q
IC502 μPD75106G -573-1B
503
502
DUMMY BIAS 8/8
TENS ACCEL 8/8
H:TENSION BURDEN 8/8
H:TENSION DOWN 8/8
PINCH ON IN 2/8
CONTROL L OUT 322-6 CN. 335-6
CONTROL R OUT 322-7 CN. 335-7
LOADING OUT 322-9 CN. 335-9
UNLOADING OUT 322-8 CN. 335-8
MODE SW A IN 322-1 CN. 335-1
MODE SW B IN 323-10 CN. 338-10
MODE SW C IN 322-2 CN. 335-2
LOADING SW A IN 323-2 CN. 338-2
LOADING SW B IN 322-12 CN. 335-12
LOADING SW C IN 323-3 CN. 338-3
L:HOLD OUT 322-3 CN. 335-3
L:START OUT 322-4 CN. 335-4
SV SO OUT 5/8
SV SO1 62-4
SV SCK OUT 5/8
SV SCK1 62-2
SV CS IN 5/8
SV CS 62-1
SV SI IN 5/8
SV SI1 62-3
FOR TOOL
CASECON UP OUT 8/8
CASECON DOWN OUT 8/8
L:TAPE END IN 8/8
L:TAPE TOP IN 8/8
L:REEL BLAKE OUT 8/8
TENSION UP 8/8
THRESHOLD SEL 8/8
JOG OUT 312-19 MD. 608-13A
JOG VD INT 5/8
L:HI CUE OUT 8/8
L:CUE OUT 8/8
CAP BRAKE OUT 8/8
L:FF COUNT CONT 7/8
+5V 63-1
GND 63-2
FOR TOOL
4VD OUT 319-11 BKU-703A 571-2
4VD IN 5/8
SP/LP 312-18 MD. 606-26A
SP/LP 6/8 DM. 608-26A
CAP FWD/RVS IN 5/8
L:CAP ON IN 5/8
L:REEL SERVO ON OUT 8/8
REEL BIAS OUT 5/8
GND 313-26 CN313 (26/26)
L:PCC CS OUT 313-24 CN313 (24/26)
L:IOM CS OUT 313-25 CN313 (25/26)
L:V INS OUT 6/8
CORE SERIAL OUT 2/8
CORE SERIAL IN 2/8
CORE SERIAL CLK IN 2/8
L:MODE CONTROL CS IN 2/8
L:CORE READY OUT 1/8
L:CASSETTE IN IN 8/8
L:CASSETTE DOWN IN 8/8
H:NT/L:PAL OUT 5/8
H:NT/PAL IN 1/8
REEL FWD/RVS OUT 8/8
REEL GND IN 8/8
L:ATF INH OUT 6/8
MCS
SCKO
SIO
SOO
FEOH1042 SUPER CAP
PS501
TP501
E501
CL103
CL69
CL70
CL67
CL68
CL79
CL66
Q501 DTC144EU
Q502 DTA144EU
Q503 DTC144EU
Q504 DTA144EU
Q505 DTC144EU
Q506 DTA144EU
Q507 DTA144EU
Q508 2SC1623
Q509 2SB1114
Q510 2SC1623
Q511 DTC144EU
Q512 DTA144EU
Q513 DTC144EU
Q514 DTC144EU
Q502 1S2835
Q503 1S2837
Q504 1S2835
Q505 1S2835
Q506 1S2835
Q507 1S2835
Q501 1S2837
IC21 (1/7) SN74HC04ANS
X501 16MHz
X502 4.19MHz
PB PAUSE 1
CAP ON 1
CAP FWD/RVS
REEL CS
VD
RESET
V MUTE
REEL SERVO ON
SI
SO
SCK
SFG
TFG
TFG2
REC PROOF
ME/MP
REEL 7
REEL 6
REEL 5
REEL 4
REEL 3
REEL 2
REEL 1
REEL 0
Mecha Control
SST-2 BOARD (4/8)
BOARD NO. 1-642-951-13, 14
EVO-9850 (J) : # 10001 – 10120
EVO-9850 (UC) : # 10031 – 10340

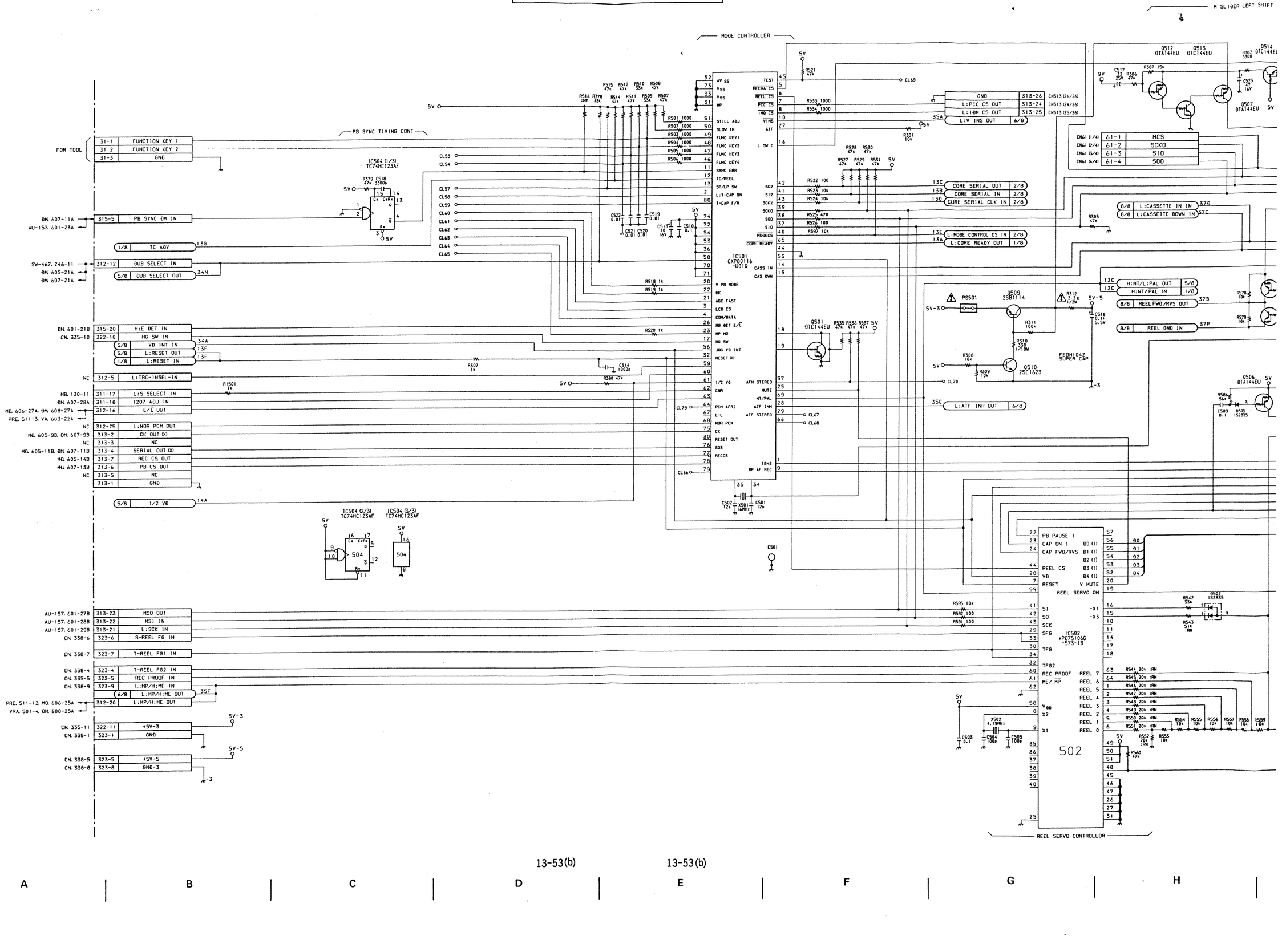
MODE CONTROLLER
PB SYNC TIMING CONT
M SLIDER LEFT SHIFT
FOR TOOL
31-1 FUNCTION KEY 1
31 2 FUNCTION KEY 2
31-3 GND
315-5 PB SYNC DM IN
1/8 TC ADV
312-12 DUB SELECT IN
S/8 DUB SELECT OUT
315-20 H:E DET IN
322-10 HG SW IN
S/8 VD INT IN
S/8 L:RESET OUT
1/8 L:RESET IN
312-5 L:TBC-INSEL-IN
311-17 L:S SELECT IN
311-18 1207 ADJ IN
312-16 E/L OUT
312-25 L:NOR PCM OUT
313-2 CK OUT 00
313-3 NC
313-4 SERIAL OUT 00
313-7 REC CS OUT
313-6 PB CS OUT
313-5 NC
313-1 GND
S/8 1/2 VD
313-23 MSO OUT
313-22 MSI IN
313-21 L:SCK IN
323-6 S-REEL FG IN
323-7 T-REEL FG1 IN
323-4 T-REEL FG2 IN
322-5 REC PROOF IN
323-9 I:MP/H:ME IN
6/8 L:MP/H:ME OUT
312-20 L:MP/H:ME OUT
322-11 +5V-3
323-1 GND
323-5 +5V-5
323-8 GND-3
IC504 (1/3) TC74HC123AF
IC504 (2/3) TC74HC123AF
IC504 (3/3) TC74HC123AF
IC501 CXP80116 -U01Q
IC502 μPD75104G -573-1B
PS501
Q501 DTC144EU
Q502 DTA144EU
Q509 2SB1114
Q510 2SC1623
Q512 DTA144EU
Q513 DTC144EU
Q514 DTC144EU
Q506 DTA144EU
FEDH1042 SUPER CAP
E501
X501 16MHz
X502 4.19MHz
CN313 (26/26) GND
CN313 (24/26) L:PCC CS OUT
CN313 (25/26) L:IOM CS OUT
35A L:V INS OUT
CN61 (1/4) 61-1 MCS
CN61 (2/4) 61-2 SCKO
CN61 (3/4) 61-3 SIO
CN61 (4/4) 61-4 SOO
13C CORE SERIAL OUT
13B CORE SERIAL IN
13B CORE SERIAL CLK IN
13E L:MODE CONTROL CS IN
13A L:CORE READY OUT
8/8 L:CASSETTE IN IN
8/8 L:CASSETTE DOWN IN
12C H:NT/L:PAL OUT
12C H:NT/PAL IN
8/8 REEL FWD/RVS OUT
8/8 REEL GND IN
35C L:ATF INH OUT
REEL SERVO CONTROLLER
REEL SERVO ON
PB PAUSE I
CAP ON I
CAP FWD/RVS
REEL CS
VD
RESET
V MUTE
SI
SO
SCK
SFG
TFG
TFG2
REC PROOF
ME/ MP
REEL 7
REEL 6
REEL 5
REEL 4
REEL 3
REEL 2
REEL 1
REEL 0
X1
-X1
-X3
502
13-53(b)
13-53(b)

A B C D E F G H

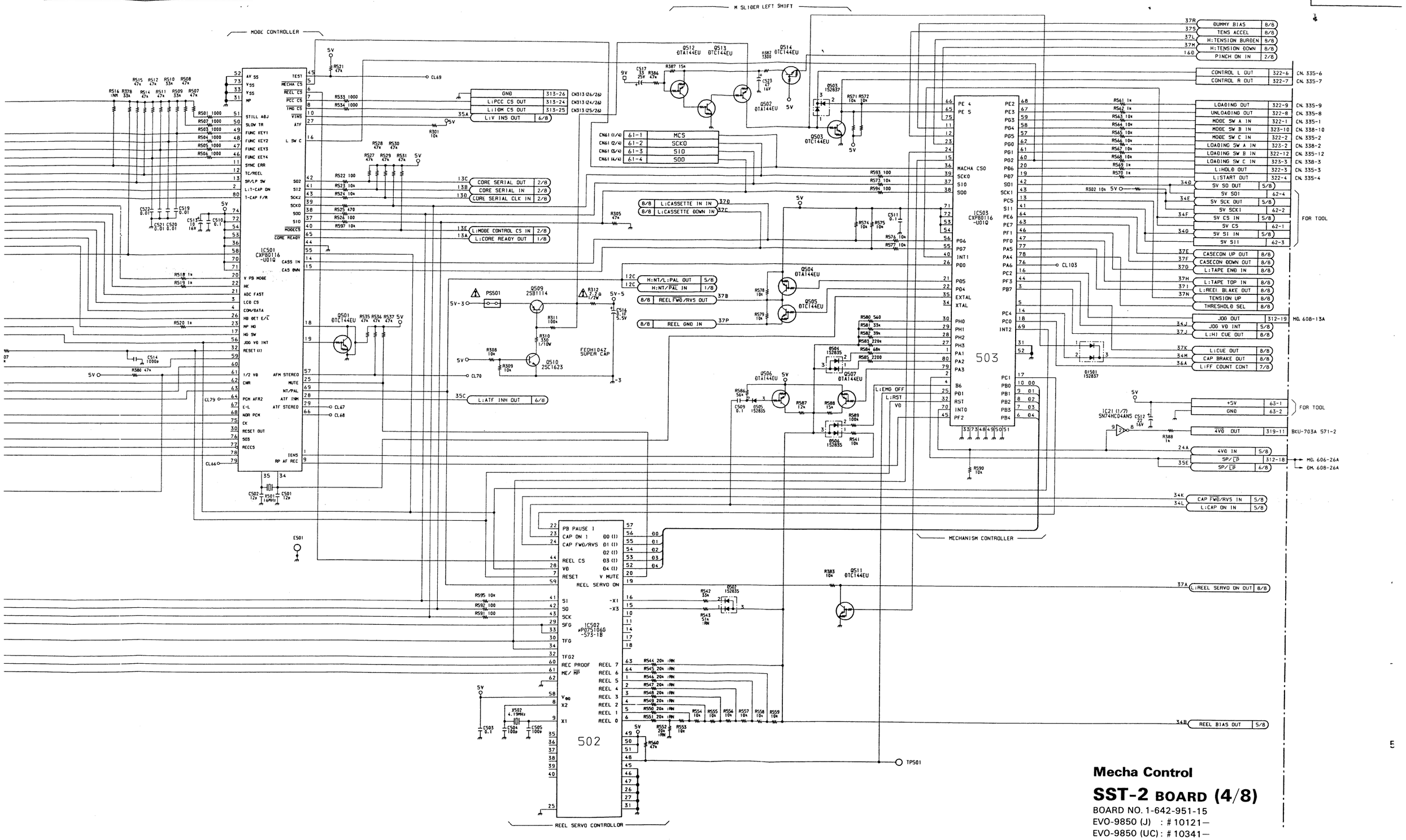
MODE CONTROLLER
M SLIDER LEFT SHIFT
IC501 CXP80116 -U01Q
IC502 μPD75106G -573-1B
REEL SERVO CONTROLLER
MECHANISM CONTROLLER
IC503 CXP80116 -U01Q
CORE SERIAL OUT 2/8
CORE SERIAL IN 2/8
CORE SERIAL CLK IN 2/8
L:MODE CONTROL CS IN 2/8
L:CORE READY OUT 1/8
L:CASSETTE IN IN 8/8
L:CASSETTE DOWN IN 8/8
H:NT/L:PAL OUT 5/8
H:NT/PAL IN 1/8
REELFWD/RVS OUT 8/8
REEL GND IN 8/8
L:ATF INH OUT 6/8
GND 313-26
L:PCC CS OUT 313-24
L:IOM CS OUT 313-25
L:V INS OUT 6/8
MCS
SCKO
SIO
SOO
DUMMY BIAS 8/8
TENS ACCEL 8/8
H:TENSION BURDEN 8/8
H:TENSION DOWN 8/8
PINCH ON IN 2/8
CONTROL L OUT 322-6
CONTROL R OUT 322-7
LOADING OUT 322-9
UNLOADING OUT 322-8
MODE SW A IN 322-1
MODE SW B IN 323-10
MODE SW C IN 322-2
LOADING SW A IN 323-2
LOADING SW B IN 322-12
LOADING SW C IN 323-3
L:HOLD OUT 322-3
L:START OUT 322-4
SV SO OUT 5/8
SV SDI 62-4
SV SCK OUT 5/8
SV SCKI 62-2
SV CS IN 5/8
SV CS 62-1
SV SI IN 5/8
SV SII 62-3
FOR TOOL
CASECON UP OUT 8/8
CASECON DOWN OUT 8/8
L:TAPE END IN 8/8
L:TAPE TOP IN 8/8
L:REEL BLAKE OUT 8/8
TENSION UP 8/8
THRESHOLD SEL 8/8
JOG OUT 312-19
JOG V0 INT 5/8
L:HI CUE OUT 8/8
L:CUE OUT 8/8
CAP BRAKE OUT 8/8
L:FF COUNT CONT 7/8
MD. 608-13A
+5V 63-1
GND 63-2
FOR TOOL
4V0 OUT 319-11
BKU-703A 571-2
4V0 IN 5/8
SP/LP 312-18
SP/LP 6/8
MD. 606-26A
DM. 608-26A
CAP FWD/RVS IN 5/8
L:CAP ON IN 5/8
L:REEL SERVO ON OUT 8/8
REEL BIAS OUT 5/8
TP501
CN313 (26/26)
CN313 (24/26)
CN313 (25/26)
CN. 335-6
CN. 335-7
CN. 335-9
CN. 335-8
CN. 335-1
CN. 338-10
CN. 335-2
CN. 338-2
CN. 335-12
CN. 338-3
CN. 335-3
CN. 335-4
CL69
CL70
CL67
CL68
CL66
CL79
CL103
E501
PS501
X501 16MHz
X502 4.19MHz
FEOH1047 SUPER CAP
Mecha Control
SST-2 BOARD (4/8)
BOARD NO. 1-642-951-15
EVO-9850 (J) : # 10121—
EVO-9850 (UC) : # 10341—

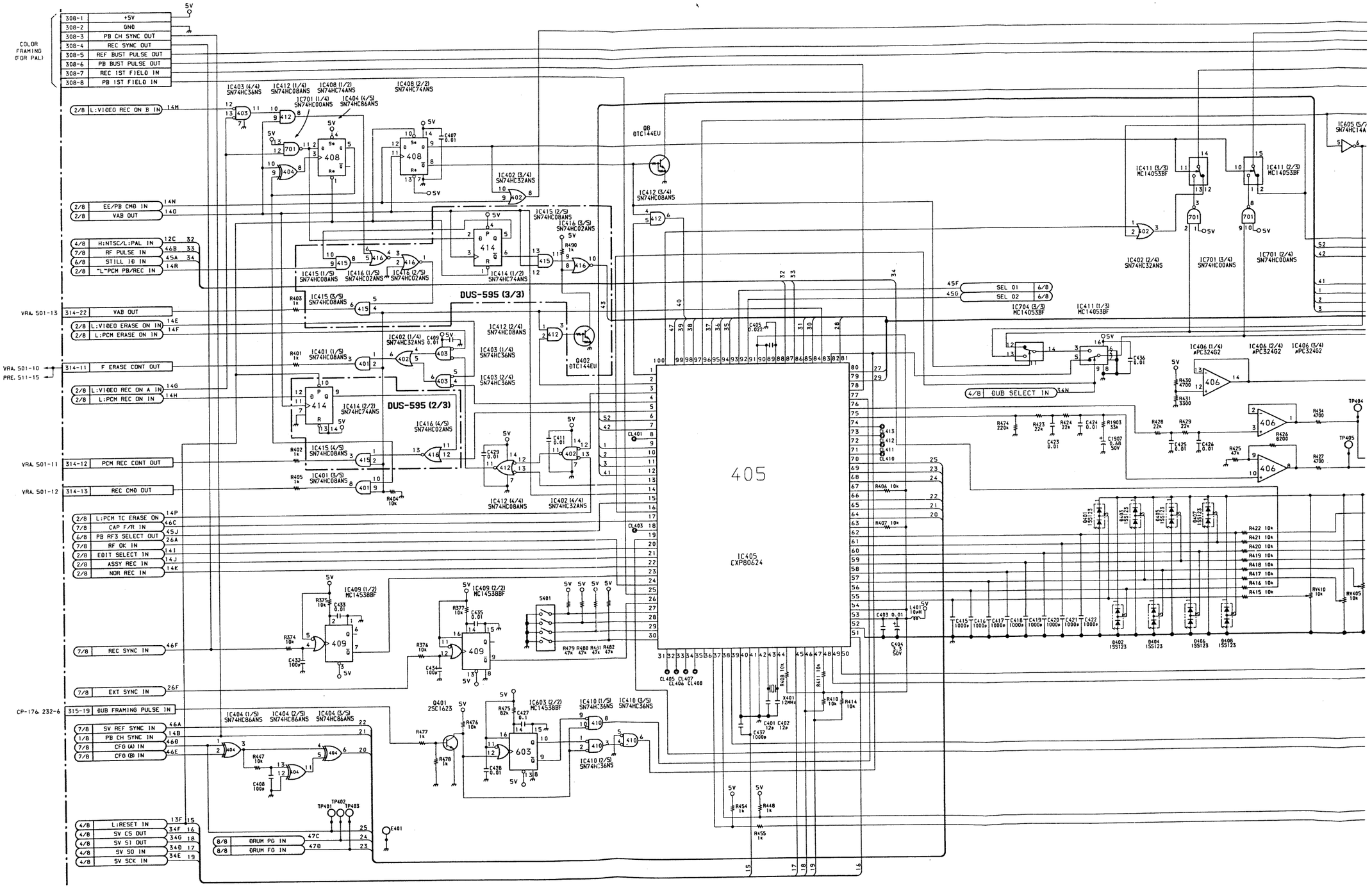

13-55 13-55

A B C D E F G H

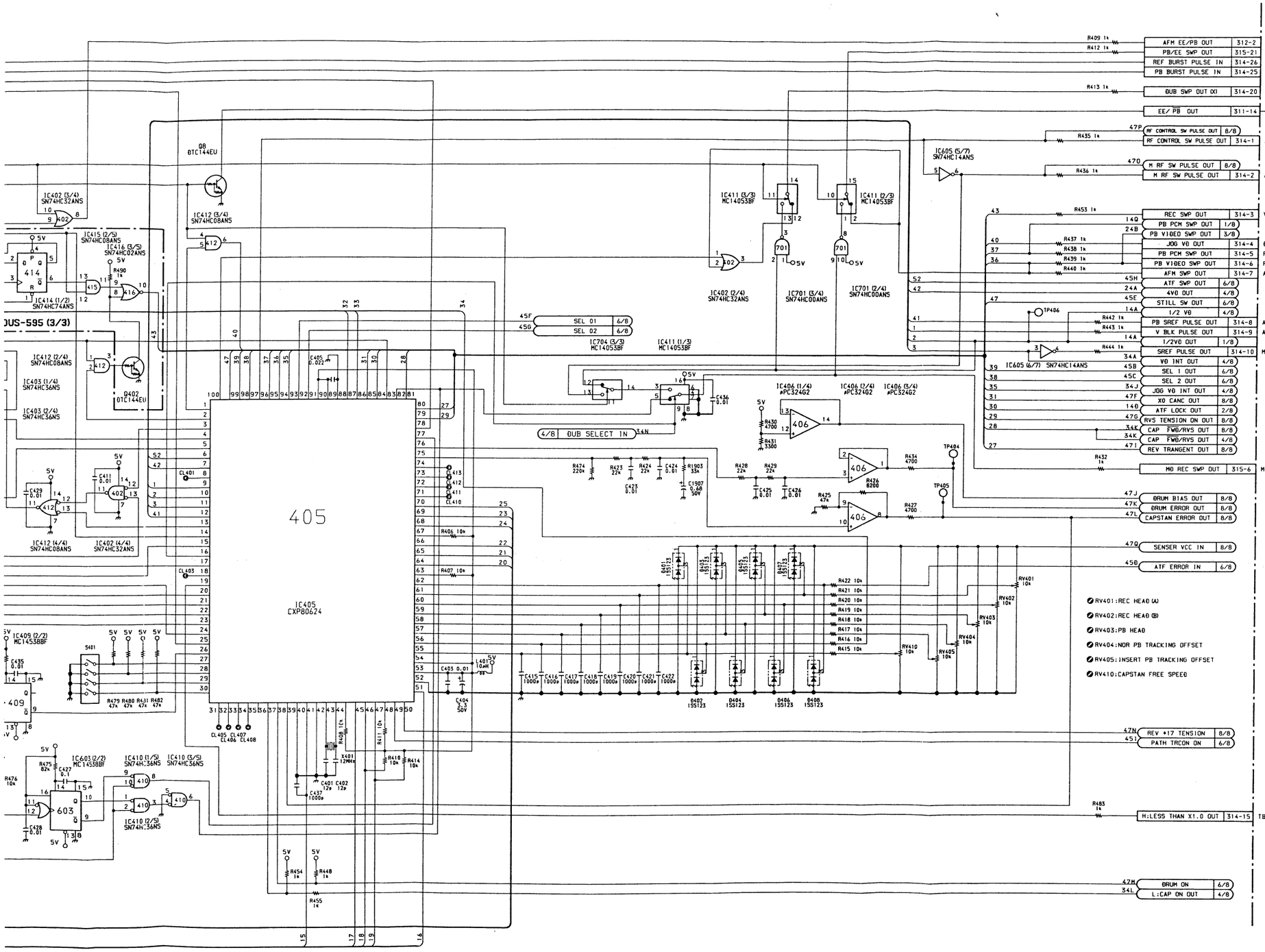

405

Servo Control

SST-2 BOARD (5/8)

BOARD NO. 1-642-951-13, 14
EVO-9850 (J) : # 10001—
EVO-9850 (UC) : # 10031—

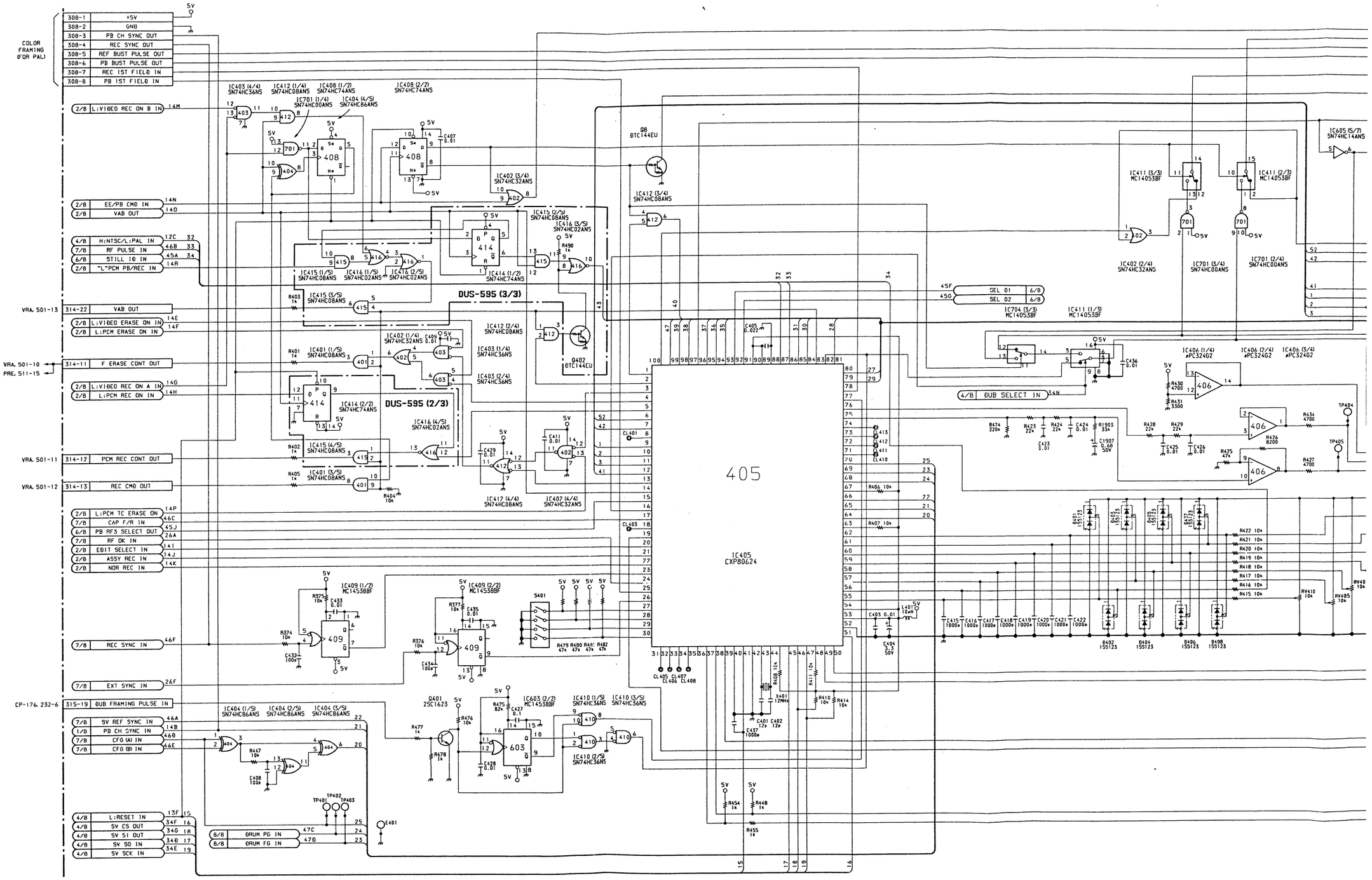
COLOR FRAMING (FOR PAL)
308-1 +5V
308-2 GND
308-3 PB CH SYNC OUT
308-4 REC SYNC OUT
308-5 REF BUST PULSE OUT
308-6 PB BUST PULSE OUT
308-7 REC 1ST FIELD IN
308-8 PB 1ST FIELD IN
2/8 L:VIDEO REC ON B IN 14M
2/8 EE/PB CMD IN 14N
2/8 VAB OUT 14O
4/8 H:NTSC/L:PAL IN 12C 32
7/8 RF PULSE IN 46B 33
6/8 STILL ID IN 45A 34
2/8 "L"PCM PB/REC IN 14R
VRA. 501-13 314-22 VAB OUT
2/8 L:VIDEO ERASE ON IN 14E
2/8 L:PCM ERASE ON IN 14F
VRA. 501-10 PRE. 511-15 314-11 F ERASE CONT OUT
2/8 L:VIDEO REC ON A IN 14G
2/8 L:PCM REC ON IN 14H
VRA. 501-11 314-12 PCM REC CONT OUT
VRA. 501-12 314-13 REC CMD OUT
2/8 L:PCM TC ERASE ON 14P
7/8 CAP F/R IN 46C
6/8 PB RF3 SELECT OUT 45J
7/8 RF OK IN 26A
2/8 EDIT SELECT IN 14I
2/8 ASSY REC IN 14J
2/8 NOR REC IN 14K
7/8 REC SYNC IN 46F
7/8 EXT SYNC IN 26F
CP-176 232-6 315-19 SUB FRAMING PULSE IN
7/8 SV REF SYNC IN 46A
1/8 PB CH SYNC IN 14B
7/8 CFG (A) IN 46D
7/8 CFG (B) IN 46E
4/8 L:RESET IN 13F 15
4/8 SV CS OUT 34F 16
4/8 SV SI OUT 34G 18
4/8 SV SO IN 34D 17
4/8 SV SCK IN 34E 19
8/8 DRUM PG IN 47C
8/8 DRUM FG IN 47D
4/8 SUB SELECT IN 34N
45F SEL 01 6/8
45G SEL 02 6/8
DUS-595 (3/3)
DUS-595 (2/3)
IC403 (4/4) SN74HC36NS
IC412 (1/4) SN74HC08ANS
IC408 (1/2) SN74HC74NS
IC701 (1/4) SN74HC00ANS
IC404 (4/5) SN74HC86ANS
IC408 (2/2) SN74HC74NS
IC402 (3/4) SN74HC32ANS
IC412 (3/4) SN74HC08ANS
IC415 (2/5) SN74HC08ANS
IC416 (3/5) SN74HC02ANS
IC415 (1/5) SN74HC08ANS
IC416 (1/5) SN74HC02ANS
IC416 (2/5) SN74HC02ANS
IC414 (1/2) SN74HC74NS
IC415 (3/5) SN74HC08ANS
IC412 (2/4) SN74HC08ANS
IC402 (1/4) SN74HC32ANS
IC403 (1/4) SN74HC36NS
IC401 (1/5) SN74HC08ANS
IC403 (2/4) SN74HC36NS
IC414 (2/2) SN74HC74NS
IC416 (4/5) SN74HC02ANS
IC415 (4/5) SN74HC08ANS
IC401 (3/5) SN74HC08ANS
IC412 (4/4) SN74HC08ANS
IC407 (4/4) SN74HC32ANS
IC402 (4/4) SN74HC32ANS
Q8 DTC144EU
IC412 (3/4) SN74HC08ANS
Q402 DTC144EU
IC411 (3/3) MC14053BF
IC411 (2/3) MC14053BF
IC605 (5/7) SN74HC14ANS
IC402 (2/4) SN74HC32ANS
IC701 (3/4) SN74HC00ANS
IC701 (2/4) SN74HC00ANS
IC704 (3/3) MC14053BF
IC411 (1/3) MC14053BF
IC406 (1/4) μPC324G2
IC406 (2/4) μPC324G2
IC406 (3/4) μPC324G2
IC405 CXP80624
IC409 (1/2) MC14538BF
IC409 (2/2) MC14538BF
IC404 (1/5) SN74HC86ANS
IC404 (2/5) SN74HC86ANS
IC404 (3/5) SN74HC86ANS
Q401 2SC1623
IC603 (2/2) MC14538BF
IC410 (1/5) SN74HC36NS
IC410 (3/5) SN74HC36NS
IC410 (2/5) SN74HC36NS
S401
TP401 TP402 TP403 TP404 TP405
CL401 CL403 CL405 CL407 CL408 CL410 CL411 CL412 CL413
405
13-55 (a)
13-55 (a)

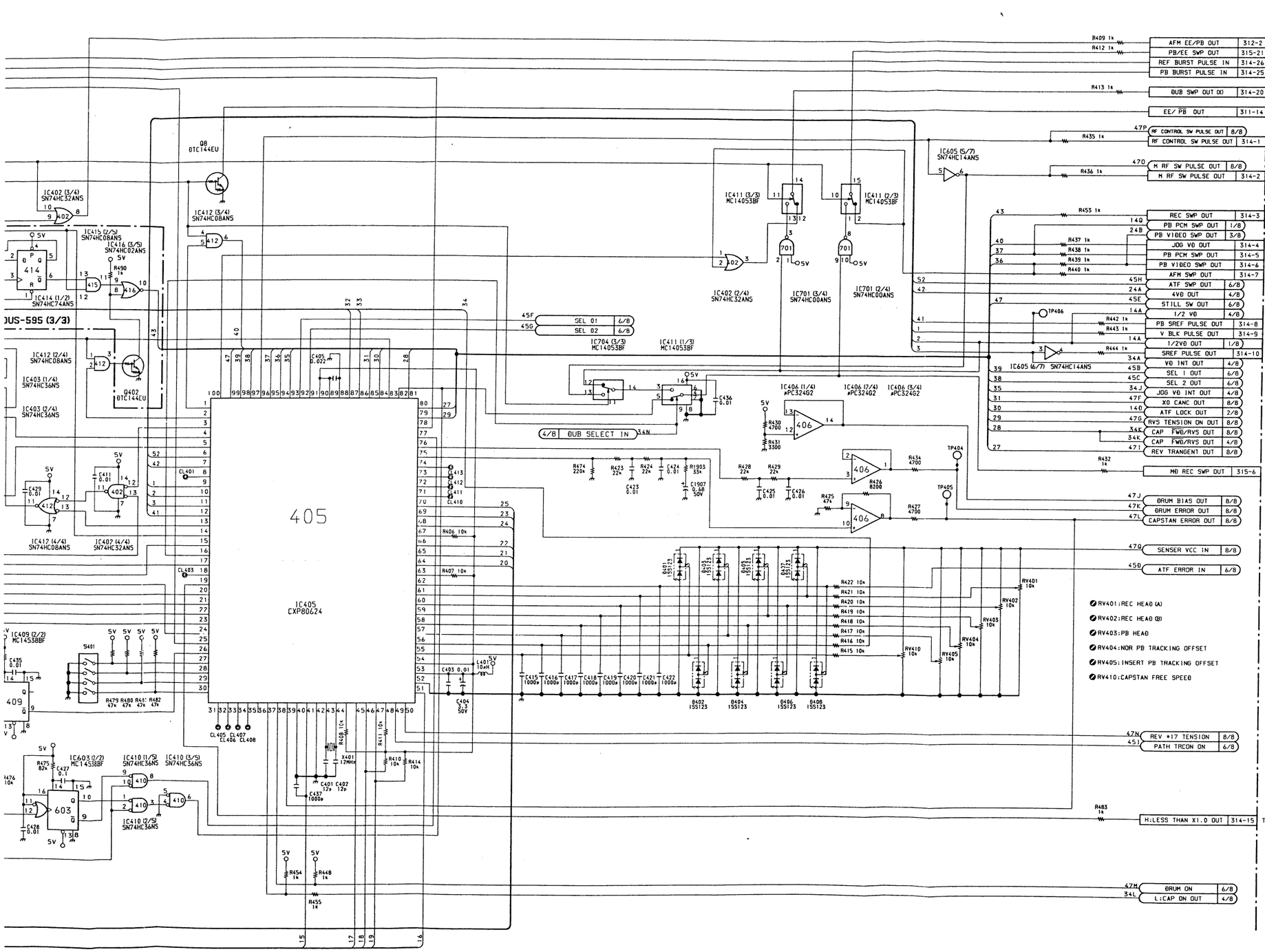

Servo Control

SST-2 BOARD (5/8)

BOARD NO. 1-642-951-13, 14
EVO-9850 (J) : # 10001–10120
EVO-9850 (UC) : # 10031–10340

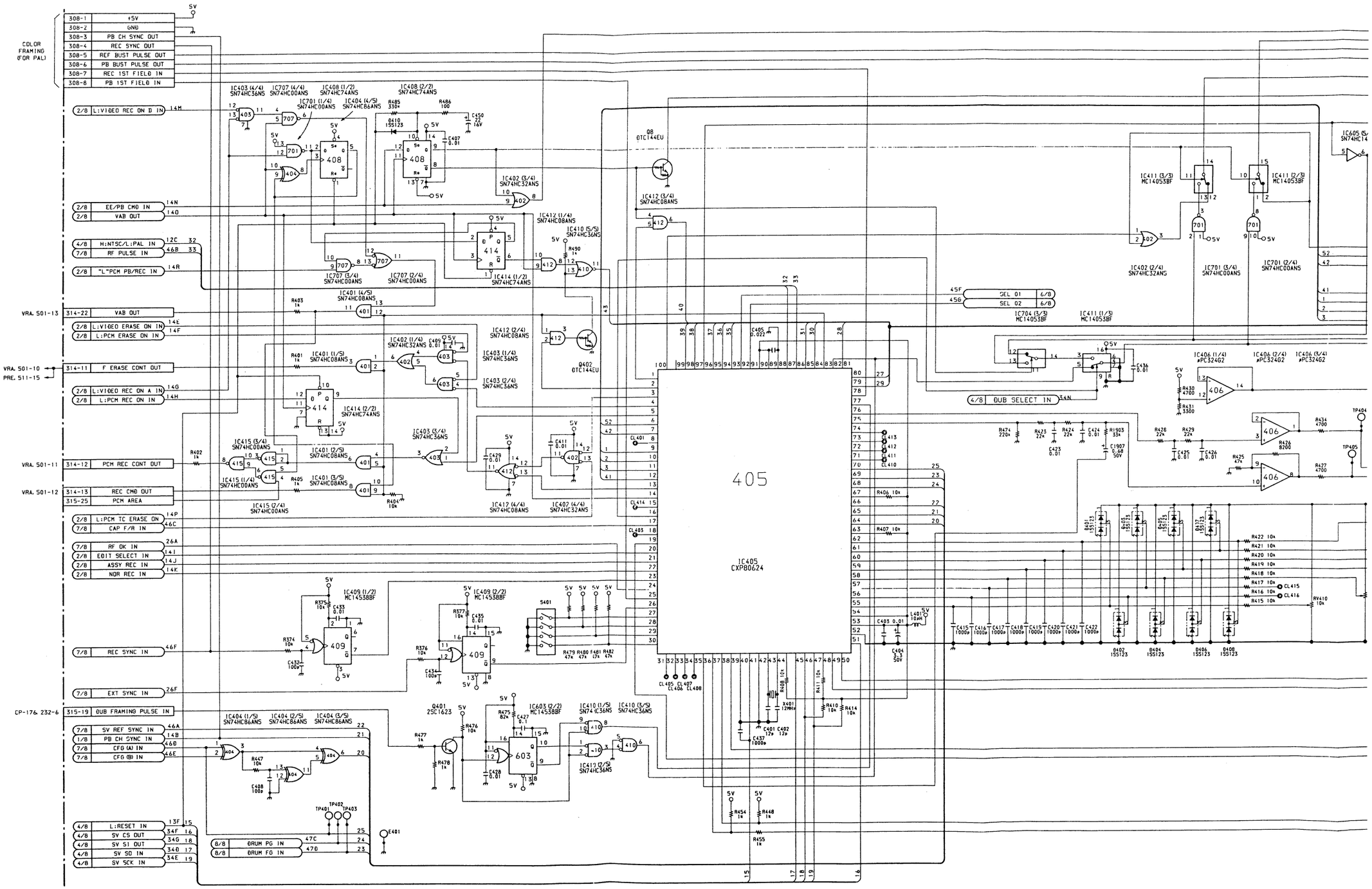

13-55(b) 13-55(b)

A B C D E F G H

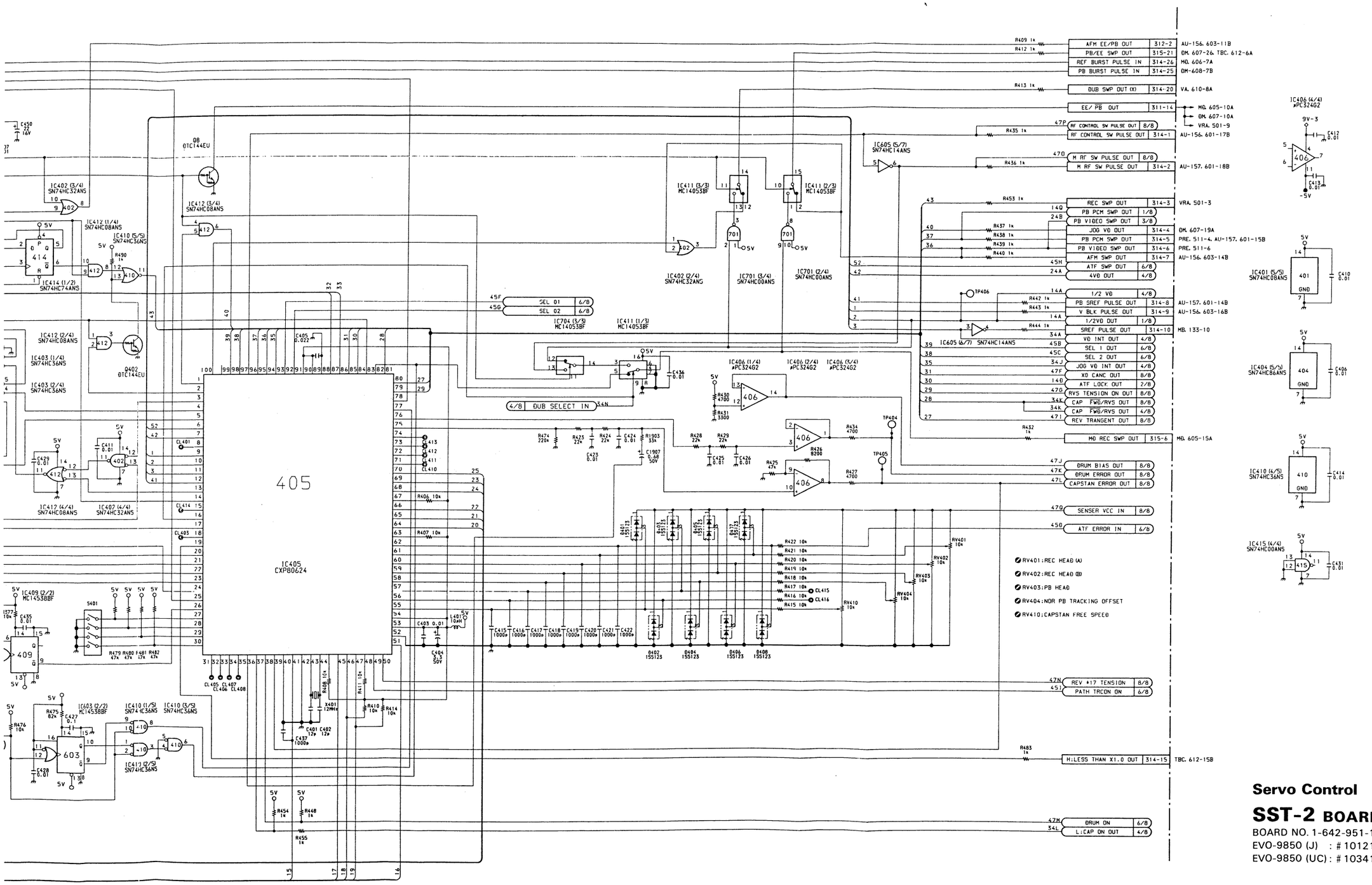

Servo Control

SST-2 BOARD (5/8)

BOARD NO. 1-642-951-15
EVO-9850 (J) : # 10121—
EVO-9850 (UC) : # 10341—

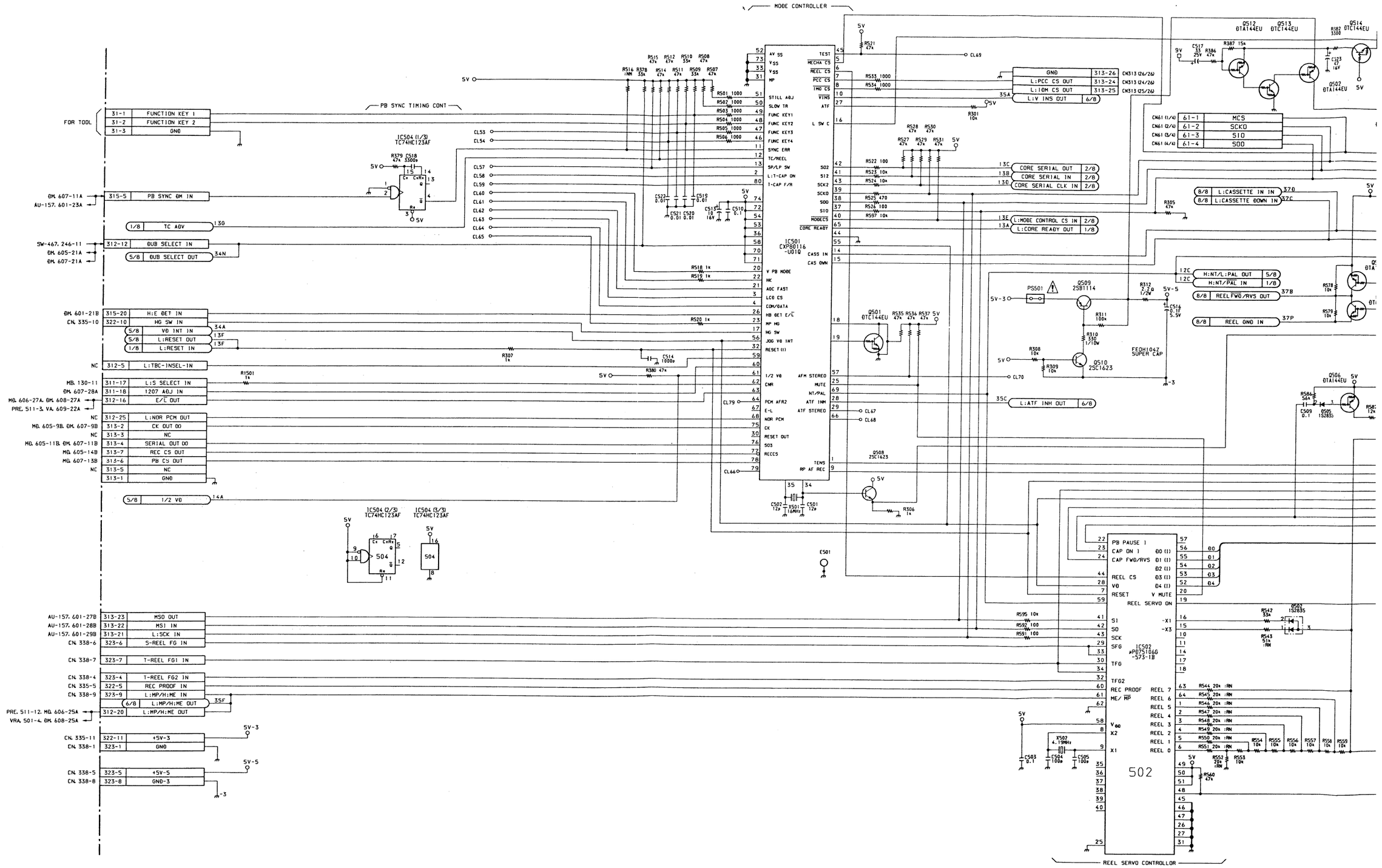

13-53(a) 13-53(a)

A B C D E F G H

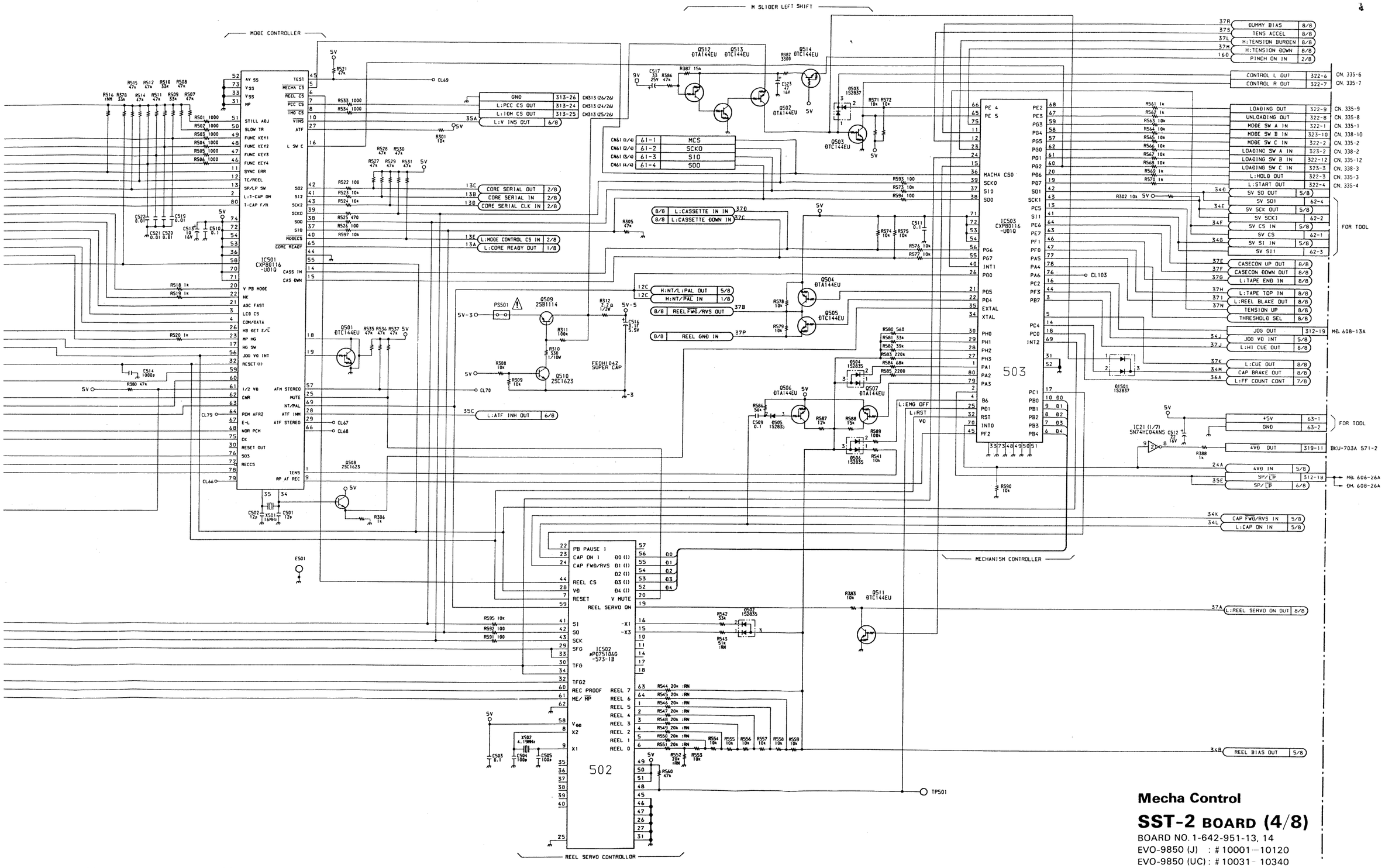

Mecha Control

SST-2 BOARD (4/8)

BOARD NO. 1-642-951-13, 14
EVO-9850 (J) : # 10001—10120
EVO-9850 (UC) : # 10031— 10340

M SLIDER LEFT SHIFT

MODE CONTROLLER

PB SYNC TIMING CONT

FOR TOOL
31-1 FUNCTION KEY 1
31 2 FUNCTION KEY 2
31-3 GND

DM. 607-11A
AU-157. 601-23A
315-5 PB SYNC DM IN

1/8 TC ADV 13D

SW-467. 246-11
DM. 605-21A
DM. 607-21A
312-12 DUB SELECT IN
5/8 DUB SELECT OUT 34N

DM. 601-21B
CN. 335-10
315-20 H:E DET IN
322-10 HG SW IN
5/8 VD INT IN 34A
5/8 L:RESET OUT 13F
1/8 L:RESET IN 13F

NC 312-5 L:TBC-INSEL-IN

MB. 130-11
DM. 607-28A
MB. 606-27A. DM. 608-27A
PRE. 511-3. VA. 609-22A
311-17 L:S SELECT IN
311-18 1207 ADJ IN
312-16 E/E OUT

NC 312-25 L:NOR PCM OUT
MB. 605-9B. DM. 607-9B 313-2 CK OUT 00
NC 313-3 NC
MB. 605-11B. DM. 607-11B 313-4 SERIAL OUT 00
MB. 605-14B 313-7 REC CS OUT
MB. 607-13B 313-6 PB CS OUT
NC 313-5 NC
313-1 GND

5/8 1/2 VD 14A

AU-157. 601-27B 313-23 MSO OUT
AU-157. 601-28B 313-22 MSI IN
AU-157. 601-29B 313-21 L:SCK IN
CN. 338-6 323-6 S-REEL FG IN

CN. 338-7 323-7 T-REEL FG1 IN

CN. 338-4 323-4 T-REEL FG2 IN
CN. 335-5 322-5 REC PROOF IN
CN. 338-9 323-9 I:MP/H:ME IN
6/8 L:MP/H:ME OUT 35F
PRE. 511-12. MB. 606-25A
VRA. 501-4. DM. 608-25A
312-20 L:MP/H:ME OUT

CN. 335-11 322-11 +5V-3
CN. 338-1 323-1 GND

CN. 338-5 323-5 +5V-5
CN. 338-8 323-8 GND-3

IC504 (1/3) TC74HC123AF
IC504 (2/3) TC74HC123AF
IC504 (3/3) TC74HC123AF

IC501 CXP80116 -U01Q

IC502 μPD75106G -573-1B

REEL SERVO CONTROLLER

CORE SERIAL OUT 2/8
CORE SERIAL IN 2/8
CORE SERIAL CLK IN 2/8
L:MODE CONTROL CS IN 2/8
L:CORE READY OUT 1/8
H:NT/L:PAL OUT 5/8
H:NT/PAL IN 1/8
REEL FWD/RVS OUT 37B
REEL GND IN 37P
L:ATF INH OUT 6/8
L:CASSETTE IN IN 37D
L:CASSETTE DOWN IN 37C
GND 313-26 CN313 (26/26)
L:PCC CS OUT 313-24 CN313 (24/26)
L:IOM CS OUT 313-25 CN313 (25/26)
L:V INS OUT 6/8 35A
CN61 (1/4) 61-1 MCS
CN61 (2/4) 61-2 SCKO
CN61 (3/4) 61-3 SIO
CN61 (4/4) 61-4 SOO

13-53(b) 13-53(b)

A B C D E F G H

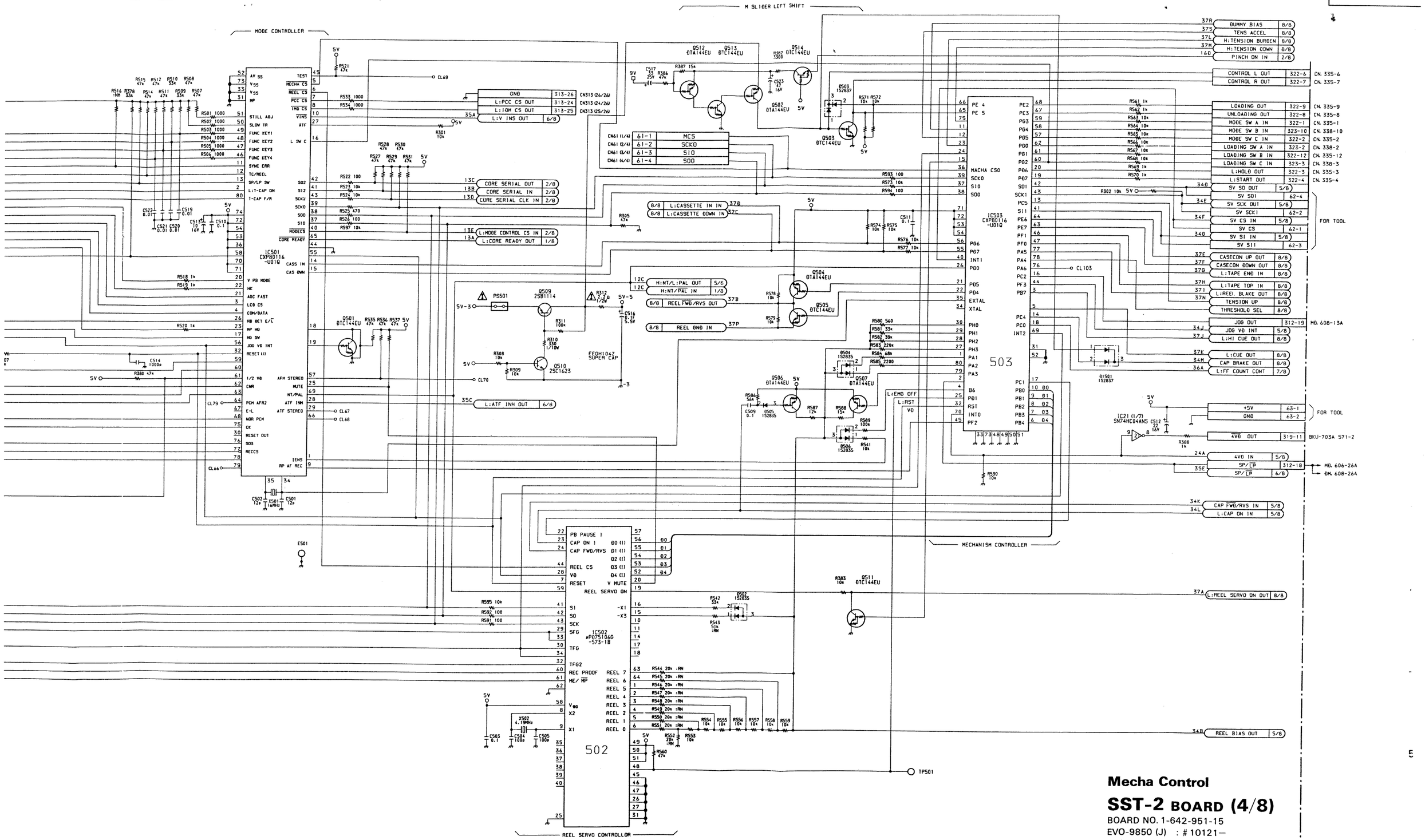

Mecha Control

SST-2 BOARD (4/8)

BOARD NO. 1-642-951-15
EVO-9850 (J) : # 10121–
EVO-9850 (UC) : # 10341–

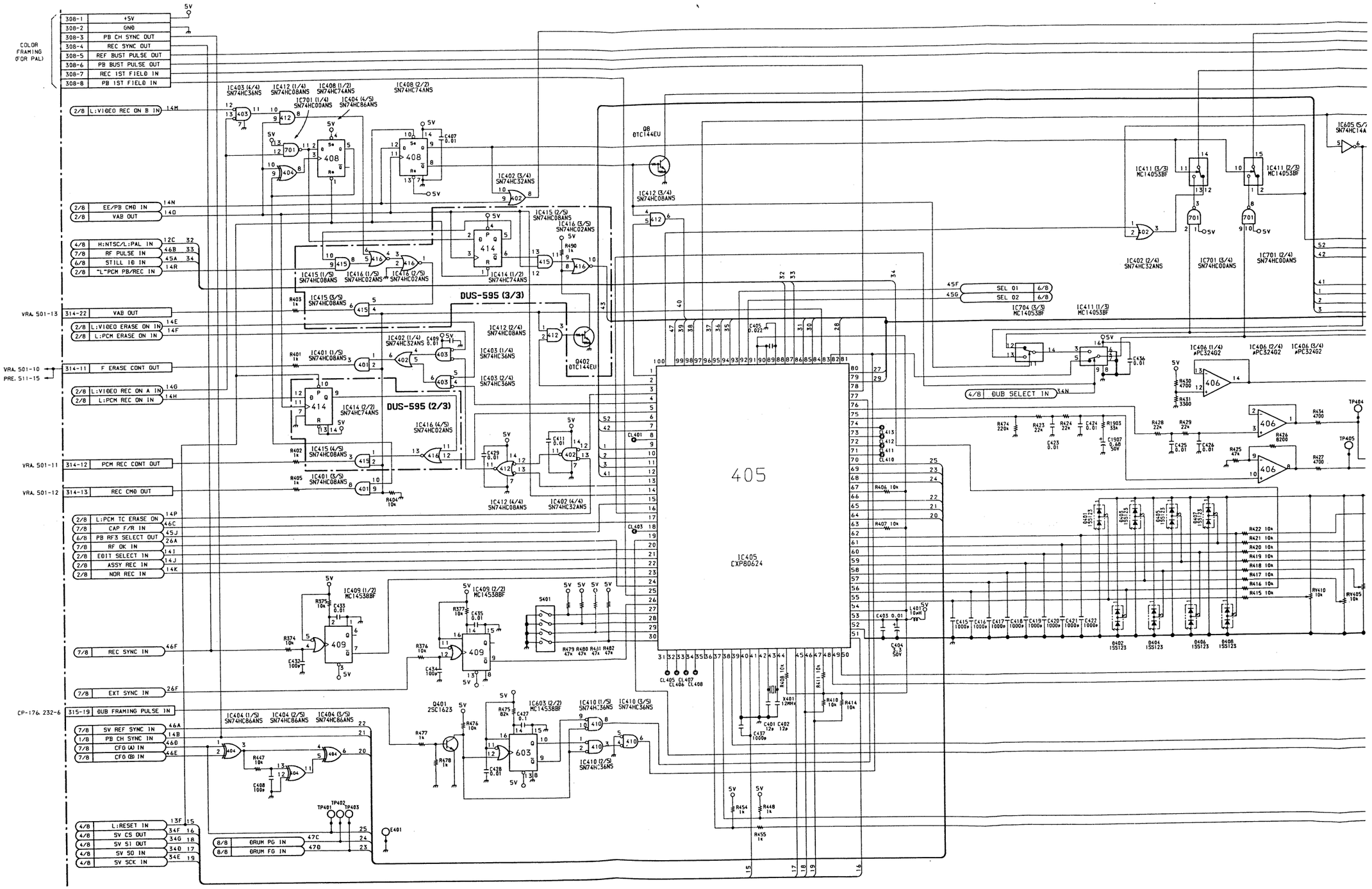
COLOR FRAMING (FOR PAL)
308-1 +5V
308-2 GND
308-3 PB CH SYNC OUT
308-4 REC SYNC OUT
308-5 REF BUST PULSE OUT
308-6 PB BUST PULSE OUT
308-7 REC 1ST FIELD IN
308-8 PB 1ST FIELD IN
2/8 L:VIDEO REC ON B IN 14M
2/8 EE/PB CMD IN 14N
2/8 VAB OUT 14O
4/8 H:NTSC/L:PAL IN 12C 32
7/8 RF PULSE IN 46B 33
6/8 STILL ID IN 45A 34
2/8 "L"PCM PB/REC IN 14R
VRA. 501-13 314-22 VAB OUT
2/8 L:VIDEO ERASE ON IN 14E
2/8 L:PCM ERASE ON IN 14F
VRA. 501-10 PRE. 511-15 314-11 F ERASE CONT OUT
2/8 L:VIDEO REC ON A IN 14G
2/8 L:PCM REC ON IN 14H
VRA. 501-11 314-12 PCM REC CONT OUT
VRA. 501-12 314-13 REC CMD OUT
2/8 L:PCM TC ERASE ON 14P
7/8 CAP F/R IN 46C
6/8 PB RF3 SELECT OUT 45J
7/8 RF OK IN 26A
2/8 EDIT SELECT IN 14I
2/8 ASSY REC IN 14J
2/8 NOR REC IN 14K
7/8 REC SYNC IN 46F
7/8 EXT SYNC IN 26F
CP-176 232-6 315-19 SUB FRAMING PULSE IN
7/8 SV REF SYNC IN 46A
1/8 PB CH SYNC IN 14B
7/8 CFG (A) IN 46D
7/8 CFG (B) IN 46E
4/8 L:RESET IN 13F 15
4/8 SV CS OUT 34F 16
4/8 SV SI OUT 34G 18
4/8 SV SO IN 34D 17
4/8 SV SCK IN 34E 19
8/8 DRUM PG IN 47C
8/8 DRUM FG IN 47D
4/8 SUB SELECT IN 34N
45F SEL 01 6/8
45G SEL 02 6/8
DUS-595 (3/3)
DUS-595 (2/3)
IC405 CXP80624
Q8 DTC144EU
Q402 DTC144EU
Q401 2SC1623
IC403 (4/4) SN74HC36NS
IC412 (1/4) SN74HC08ANS
IC408 (1/2) SN74HC74ANS
IC701 (1/4) SN74HC00ANS
IC404 (4/5) SN74HC86ANS
IC408 (2/2) SN74HC74ANS
IC402 (3/4) SN74HC32ANS
IC412 (3/4) SN74HC08ANS
IC415 (2/5) SN74HC08ANS
IC416 (3/5) SN74HC02ANS
IC415 (1/5) SN74HC08ANS
IC416 (1/5) SN74HC02ANS
IC415 (5/5) SN74HC02ANS
IC414 (1/2) SN74HC74ANS
IC402 (1/4) SN74HC32ANS
IC403 (1/4) SN74HC36NS
IC403 (2/4) SN74HC36NS
IC412 (2/4) SN74HC08ANS
IC414 (2/2) SN74HC74ANS
IC416 (4/5) SN74HC02ANS
IC415 (4/5) SN74HC08ANS
IC401 (5/5) SN74HC08ANS
IC412 (4/4) SN74HC08ANS
IC402 (4/4) SN74HC32ANS
IC409 (1/2) MC14538BF
IC409 (2/2) MC14538BF
IC404 (1/5) SN74HC86ANS
IC404 (2/5) SN74HC86ANS
IC404 (3/5) SN74HC86ANS
IC603 (2/2) MC14538BF
IC410 (1/5) SN74HC36NS
IC410 (3/5) SN74HC36NS
IC410 (2/5) SN74HC36NS
IC411 (3/3) MC14053BF
IC704 (3/3) MC14053BF
IC411 (1/3) MC14053BF
IC411 (2/3) MC14053BF
IC402 (2/4) SN74HC32ANS
IC701 (3/4) SN74HC00ANS
IC701 (2/4) SN74HC00ANS
IC605 (5/7) SN74HC14A
IC406 (1/4) μPC32402
IC406 (2/4) μPC32402
IC406 (3/4) μPC32402
CL405 CL407 CL406 CL408
CL410
CL411
CL412
CL413
CL403
X401 12MHz
TP401 TP402 TP403 TP404 TP405
E401
405
13-55
13-55

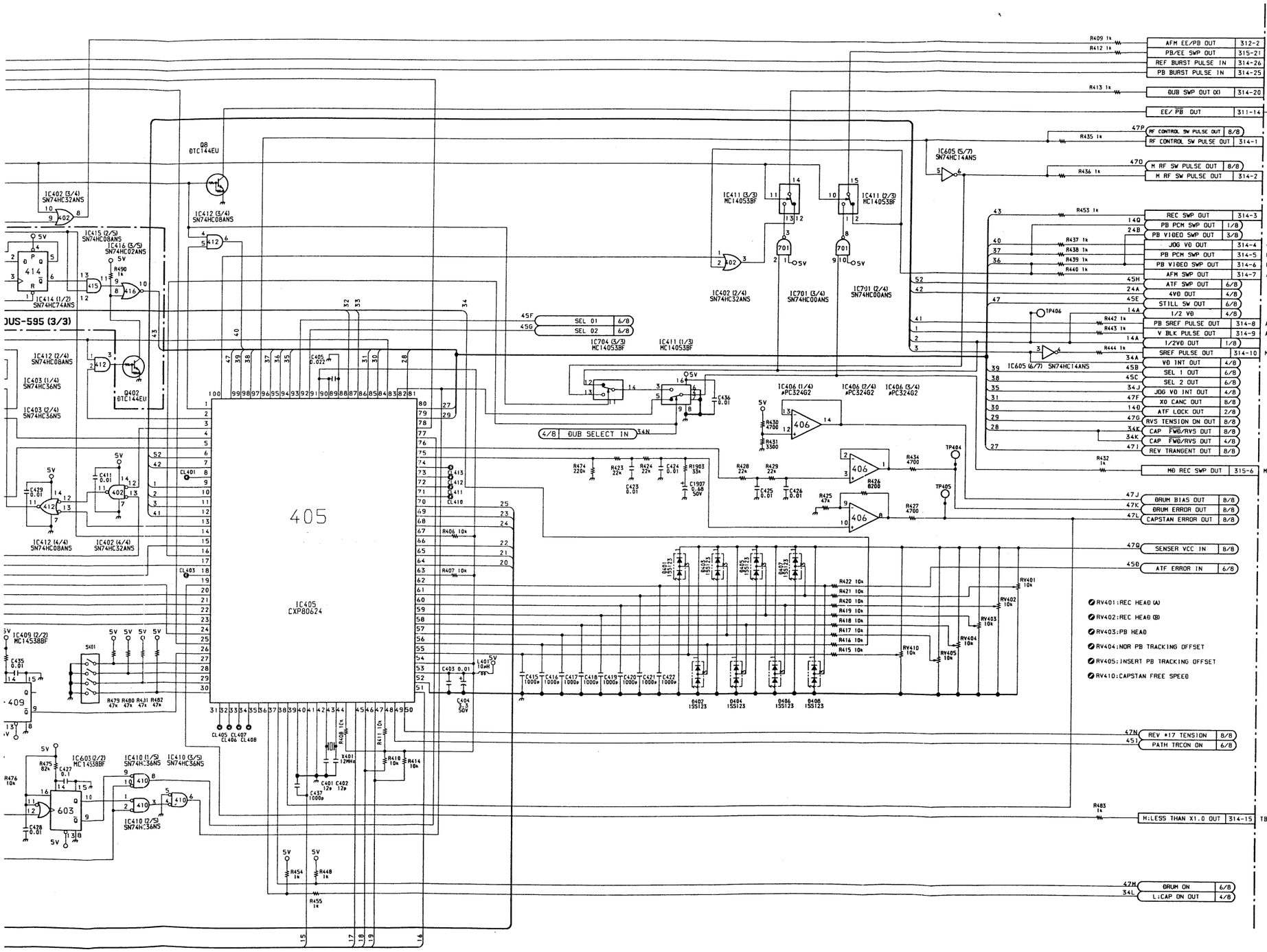

Servo Control

SST-2 BOARD (5/8)

BOARD NO. 1-642-951-13, 14
EVO-9850 (J) : # 10001—
EVO-9850 (UC) : # 10031—

13-55 13-55 13-55

D E F G H I J K L

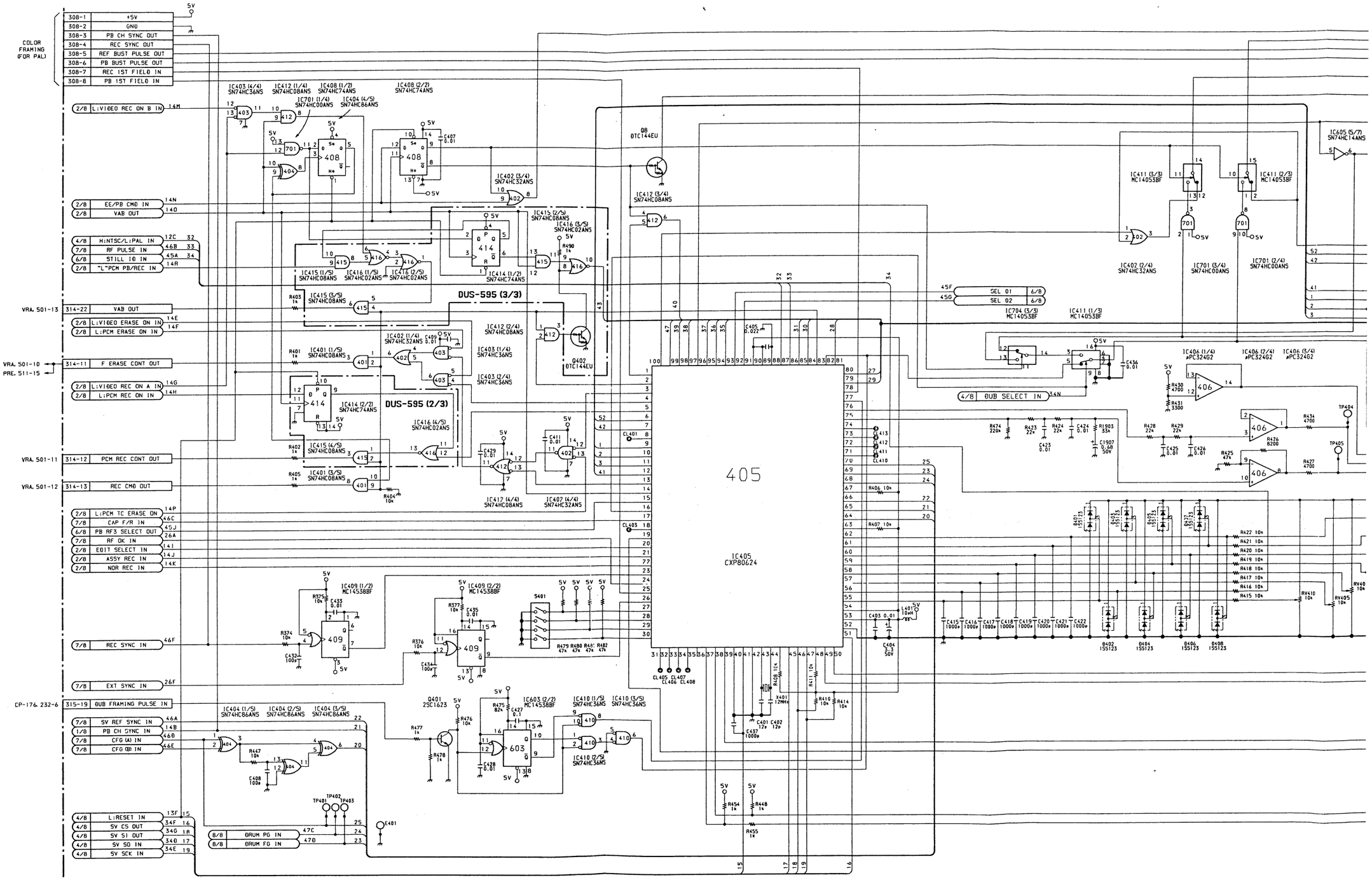

13-55 (a) 13-55 (a)

A B C D E F G H

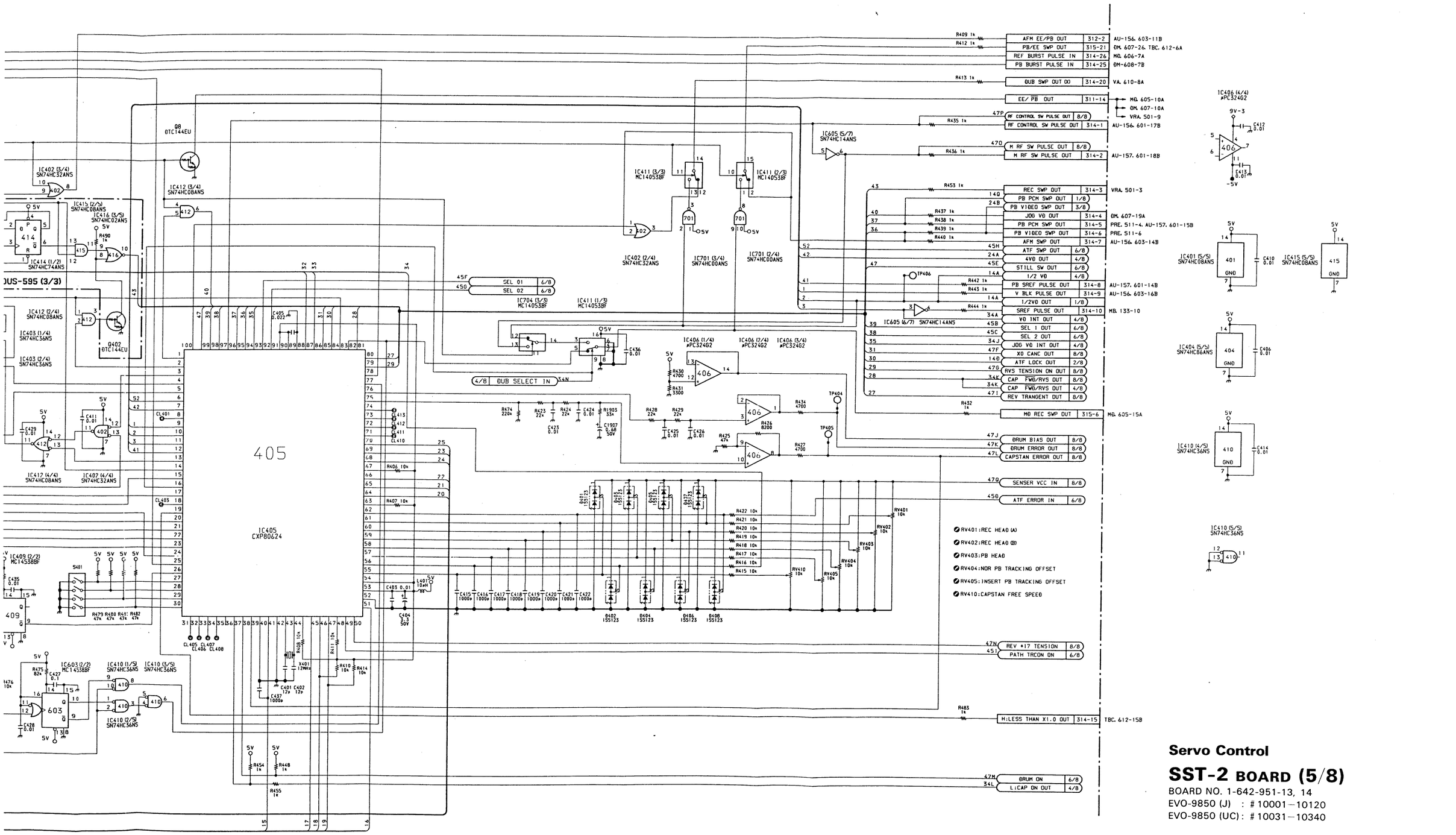

Servo Control

SST-2 BOARD (5/8)

BOARD NO. 1-642-951-13, 14
EVO-9850 (J) : # 10001—10120
EVO-9850 (UC) : # 10031—10340

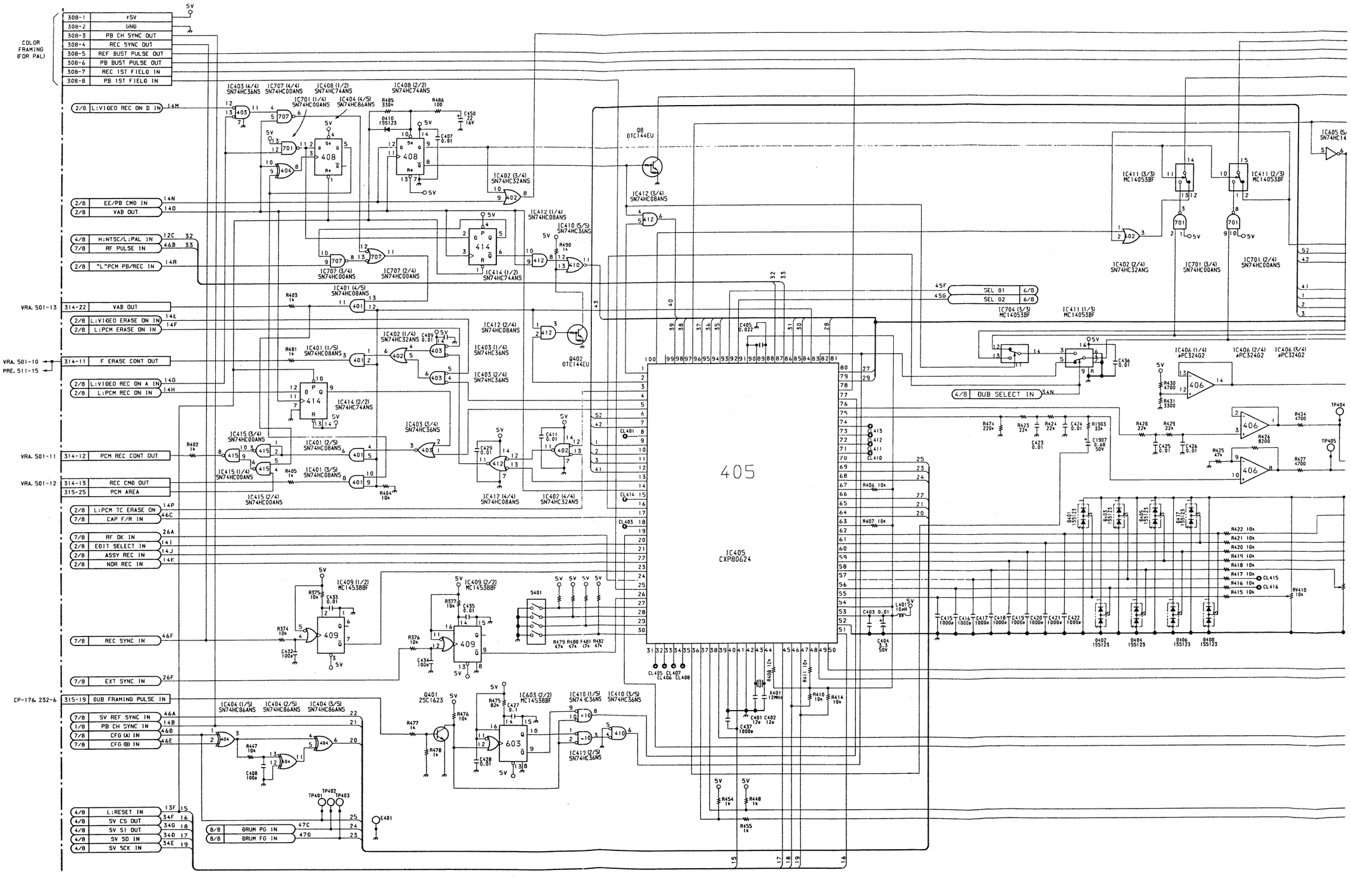
308-1 +5V
308-2 GND
308-3 PB CH SYNC OUT
308-4 REC SYNC OUT
308-5 REF BUST PULSE OUT
308-6 PB BUST PULSE OUT
308-7 REC 1ST FIELD IN
308-8 PB 1ST FIELD IN
COLOR FRAMING (FOR PAL)
2/8 L:VIDEO REC ON D IN 14M
2/8 EE/PB CMD IN 14N
2/8 VAB OUT 14O
4/8 H:NTSC/L:PAL IN 12C 32
7/8 RF PULSE IN 46B 33
2/8 "L"PCM PB/REC IN 14R
VRA. 501-13 314-22 VAB OUT
2/8 L:VIDEO ERASE ON IN 14E
2/8 L:PCM ERASE ON IN 14F
VRA. 501-10 PRE. 511-15 314-11 F ERASE CONT OUT
2/8 L:VIDEO REC ON A IN 14G
2/8 L:PCM REC ON IN 14H
VRA. 501-11 314-12 PCM REC CONT OUT
VRA. 501-12 314-13 REC CMD OUT
315-25 PCM AREA
2/8 L:PCM TC ERASE ON 14P
7/8 CAP F/R IN 46C
7/8 RF OK IN 26A
2/8 EDIT SELECT IN 14I
2/8 ASSY REC IN 14J
2/8 NOR REC IN 14K
7/8 REC SYNC IN 46F
7/8 EXT SYNC IN 26F
CP-176 232-6 315-19 OUB FRAMING PULSE IN
7/8 SV REF SYNC IN 46A
1/8 PB CH SYNC IN 14B
7/8 CFG (A) IN 46D
7/8 CFG (B) IN 46E
4/8 L:RESET IN 13F 15
4/8 SV CS OUT 34F 16
4/8 SV SI OUT 34G 18
4/8 SV SO IN 34D 17
4/8 SV SCK IN 34E 19
8/8 DRUM PG IN 47C
8/8 DRUM FG IN 47D
4/8 OUB SELECT IN 34N
SEL 01 6/8
SEL 02 6/8
405
IC405 CXP80624
IC403(4/4) SN74HC36NS
IC707 (4/4) SN74HC00ANS
IC408 (1/2) SN74HC74ANS
IC408 (2/2) SN74HC74ANS
IC701 (1/4) SN74HC00ANS
IC404 (4/5) SN74HC86ANS
IC402 (3/4) SN74HC32ANS
IC412 (1/4) SN74HC08ANS
IC410 (5/5) SN74HC36NS
IC707 (3/4) SN74HC00ANS
IC707 (2/4) SN74HC00ANS
IC414 (1/2) SN74HC74ANS
IC401 (4/5) SN74HC08ANS
IC412 (2/4) SN74HC08ANS
IC402 (1/4) SN74HC32ANS
IC401 (1/5) SN74HC08ANS
IC403 (1/4) SN74HC36NS
IC403 (2/4) SN74HC36NS
IC414 (2/2) SN74HC74ANS
IC403 (3/4) SN74HC36NS
IC415 (3/4) SN74HC00ANS
IC401 (2/5) SN74HC08ANS
IC415 (1/4) SN74HC00ANS
IC401 (3/5) SN74HC08ANS
IC415 (2/4) SN74HC00ANS
IC417 (4/4) SN74HC08ANS
IC407 (4/4) SN74HC32ANS
IC409 (1/2) MC14538BF
IC409 (2/2) MC14538BF
IC404 (1/5) SN74HC86ANS
IC404 (2/5) SN74HC86ANS
IC404 (3/5) SN74HC86ANS
IC603 (2/2) MC14538BF
IC410 (1/5) SN74HC36NS
IC410 (3/5) SN74HC36NS
IC411 (5/5) SN74HC36NS
IC704 (3/3) MC14053BF
IC411 (1/3) MC14053BF
IC411 (3/3) MC14053BF
IC411 (2/3) MC14053BF
IC402 (2/4) SN74HC32ANS
IC701 (3/4) SN74HC00ANS
IC701 (2/4) SN74HC00ANS
IC605 (5/6) SN74HC14
IC406 (1/4) μPC324G2
IC406 (2/4) μPC324G2
IC406 (3/4) μPC324G2
Q8 DTC144EU
Q402 DTC144EU
Q401 2SC1623
S401
X401 12MHz
TP401 TP402 TP403 TP404 TP405
E401
CL401 CL402 CL403 CL404 CL405 CL406 CL407 CL408 CL410 CL411 CL412 CL413 CL414 CL415 CL416
RV410 10k
13-55(b)
13-55(b)
A B C D E F G H

SST-2 (5/8)

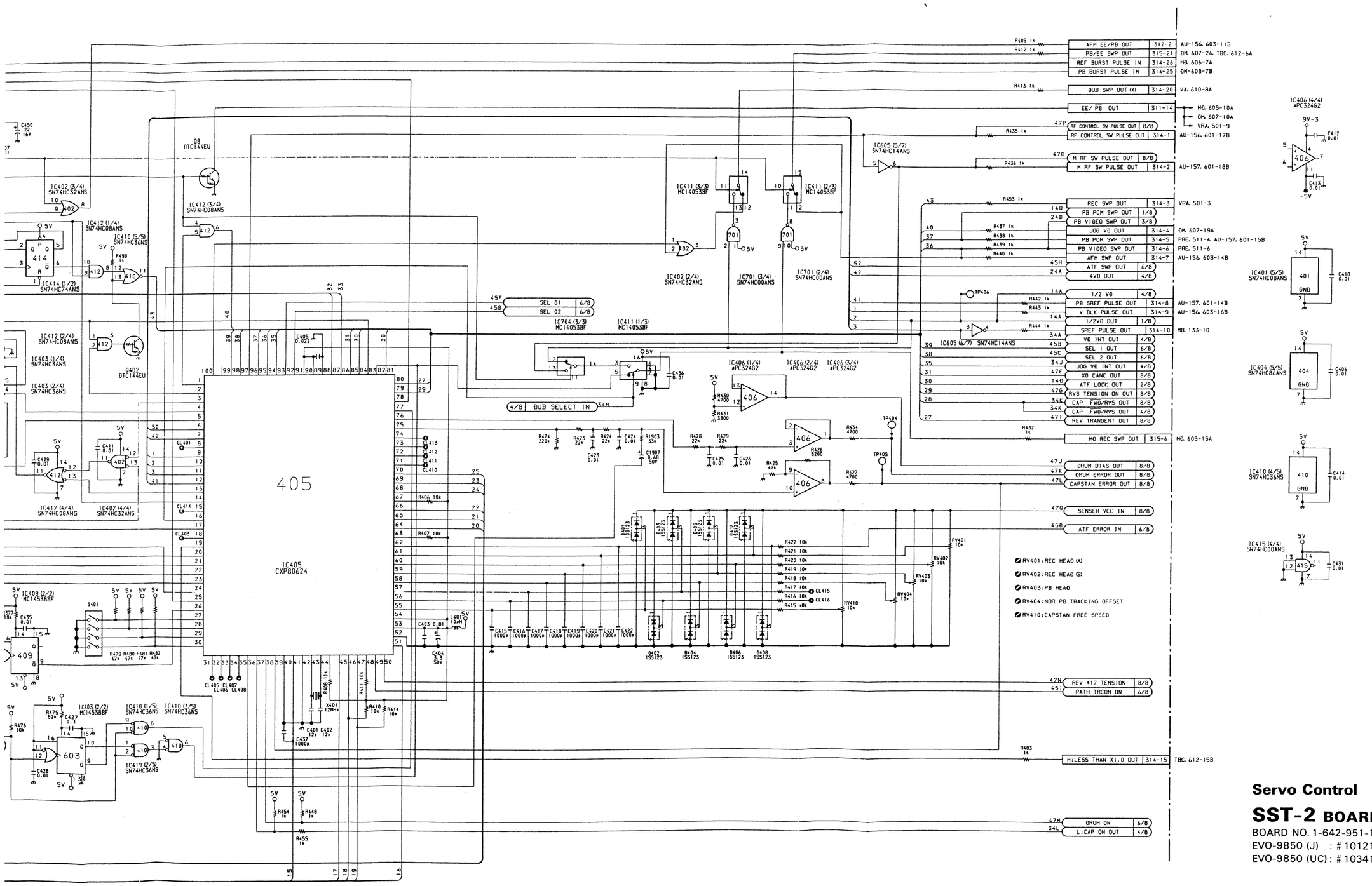

Servo Control

SST-2 BOARD (5/8)

BOARD NO. 1-642-951-15
EVO-9850 (J) : # 10121–
EVO-9850 (UC) : # 10341–

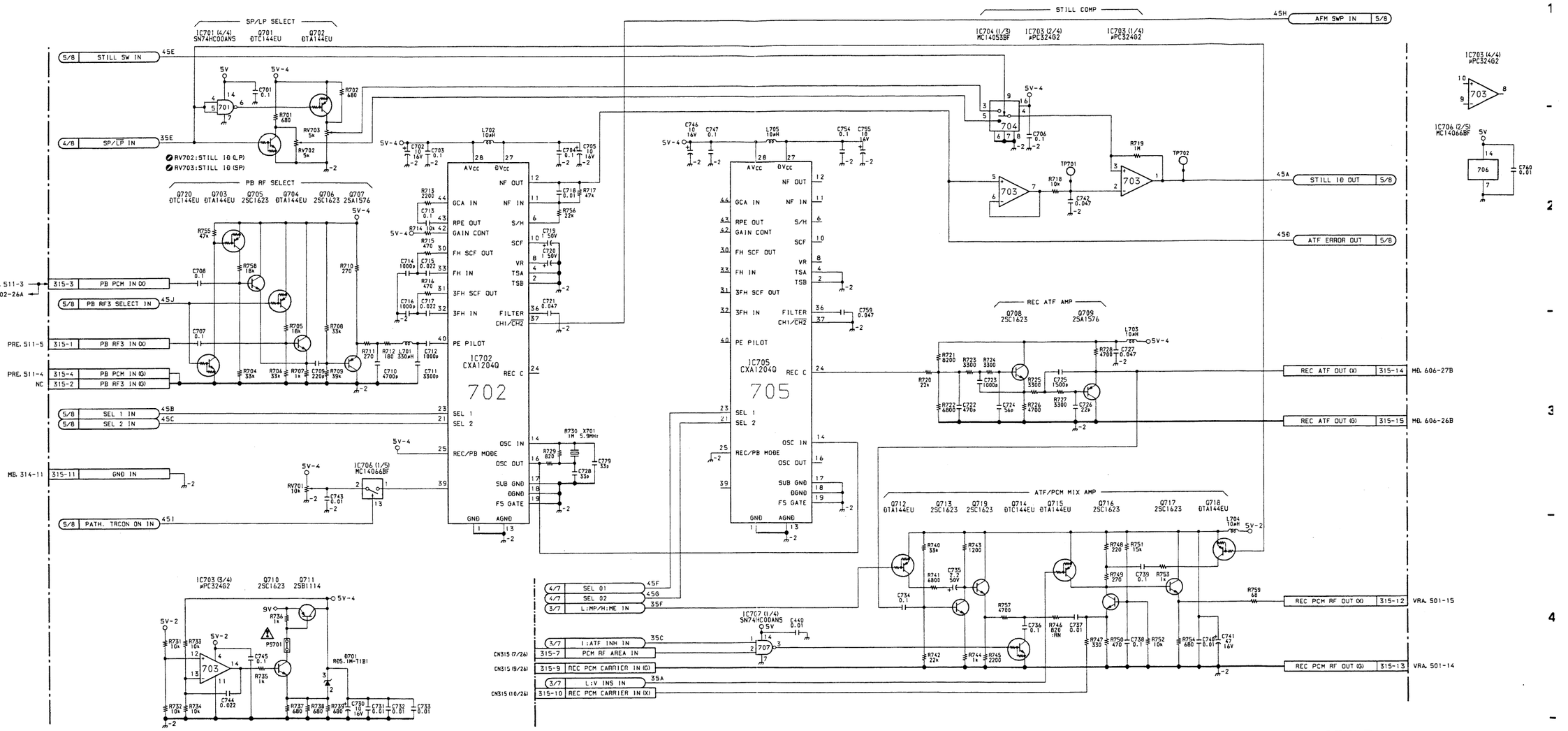

ATF Process

SST-2 BOARD (6/8)

BOARD NO. 1-642-951-13, 14
EVO-9850 (J) : # 10001—
EVO-9850 (UC) : # 10031—

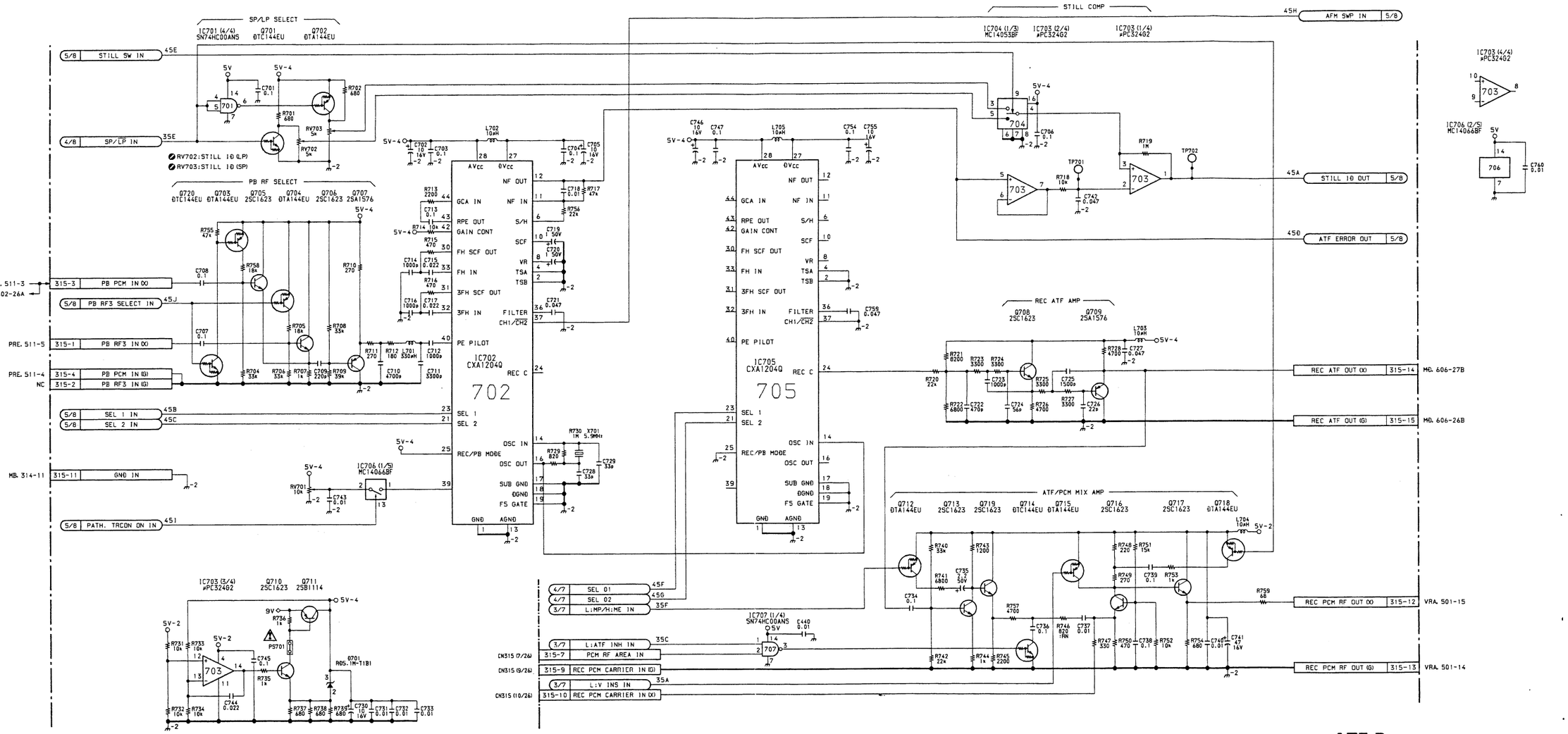

ATF Process

SST-2 BOARD (6/8)

BOARD NO. 1-642-951-13, 14
EVO-9850 (J) : # 10001—10120
EVO-9850 (UC) : # 10031—10340

13-57(a) 13-57(a)

A | B | C | D | E | F | G | H

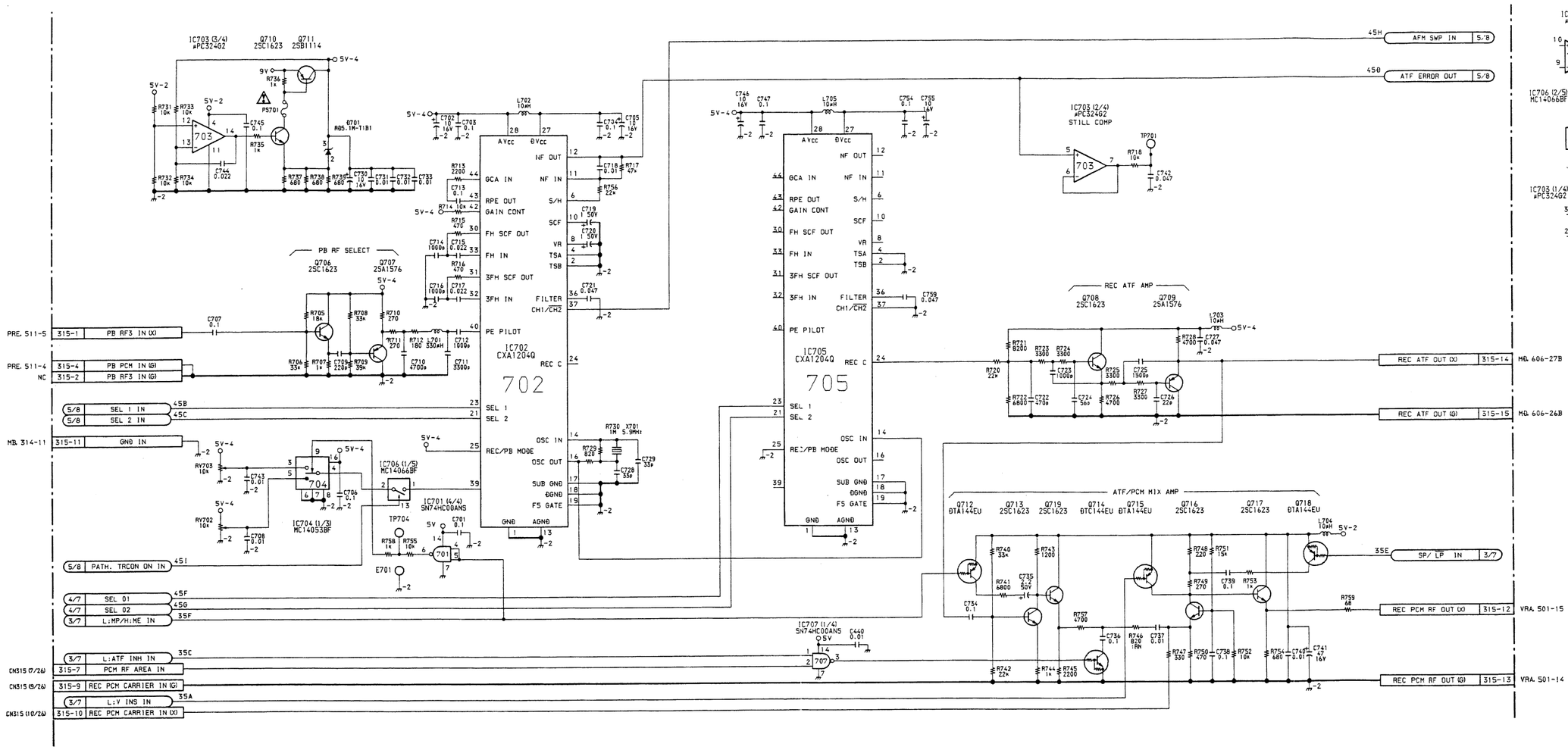

ATF Process

SST-2 BOARD (6/8)

BOARD NO. 1-642-951-15
EVO-9850 (J) : # 10121—
EVO-9850 (UC) : # 10341—

13-57 (b) 13-57 (b)

A | B | C | D | E | F | G | H

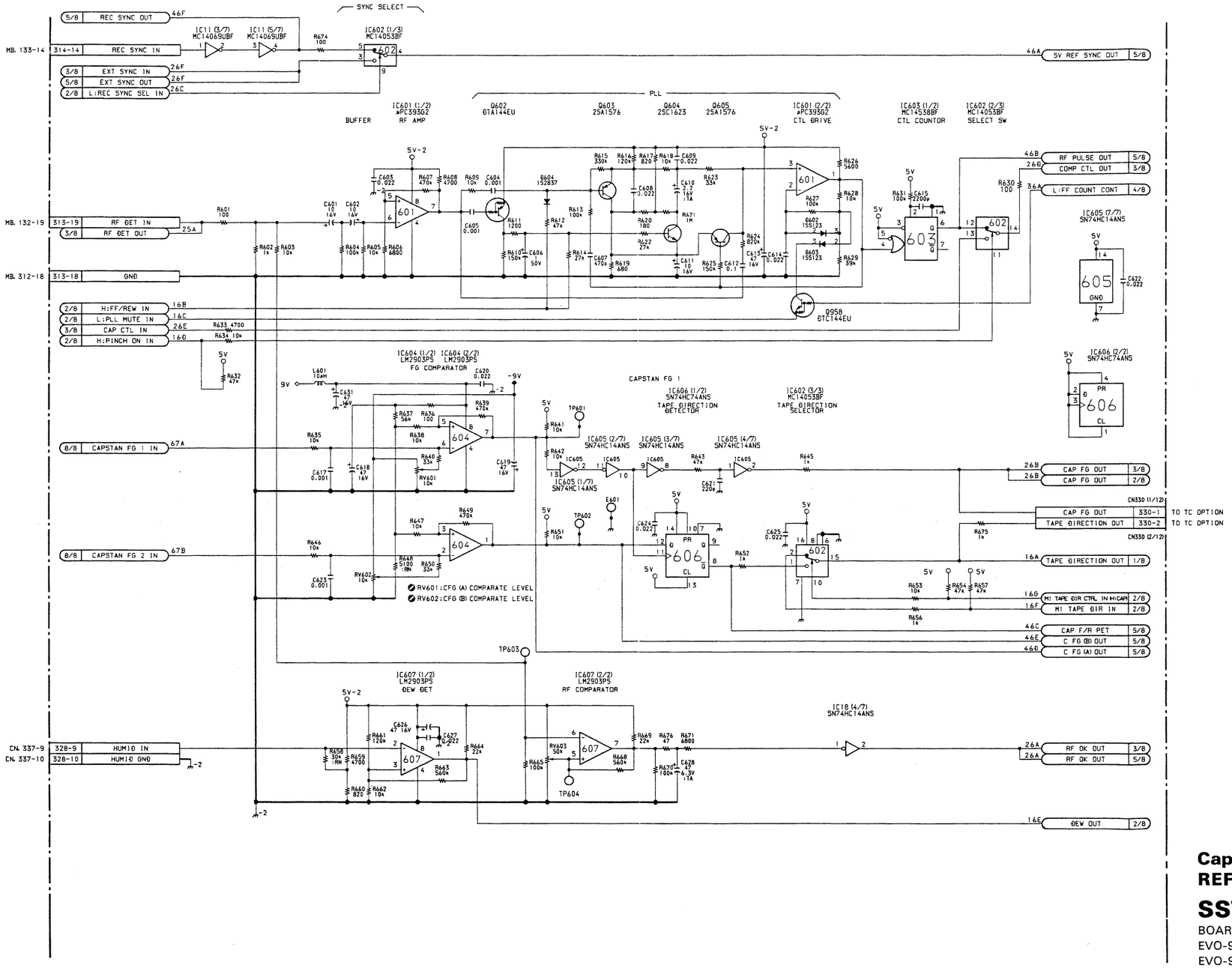

Capstan FG Amp, REF Envelope Detector

SST-2 BOARD (7/8)

BOARD NO. 1-642-951-13, 14, 15
EVO-9850 (J) : # 10001—
EVO-9850 (UC) : # 10031—

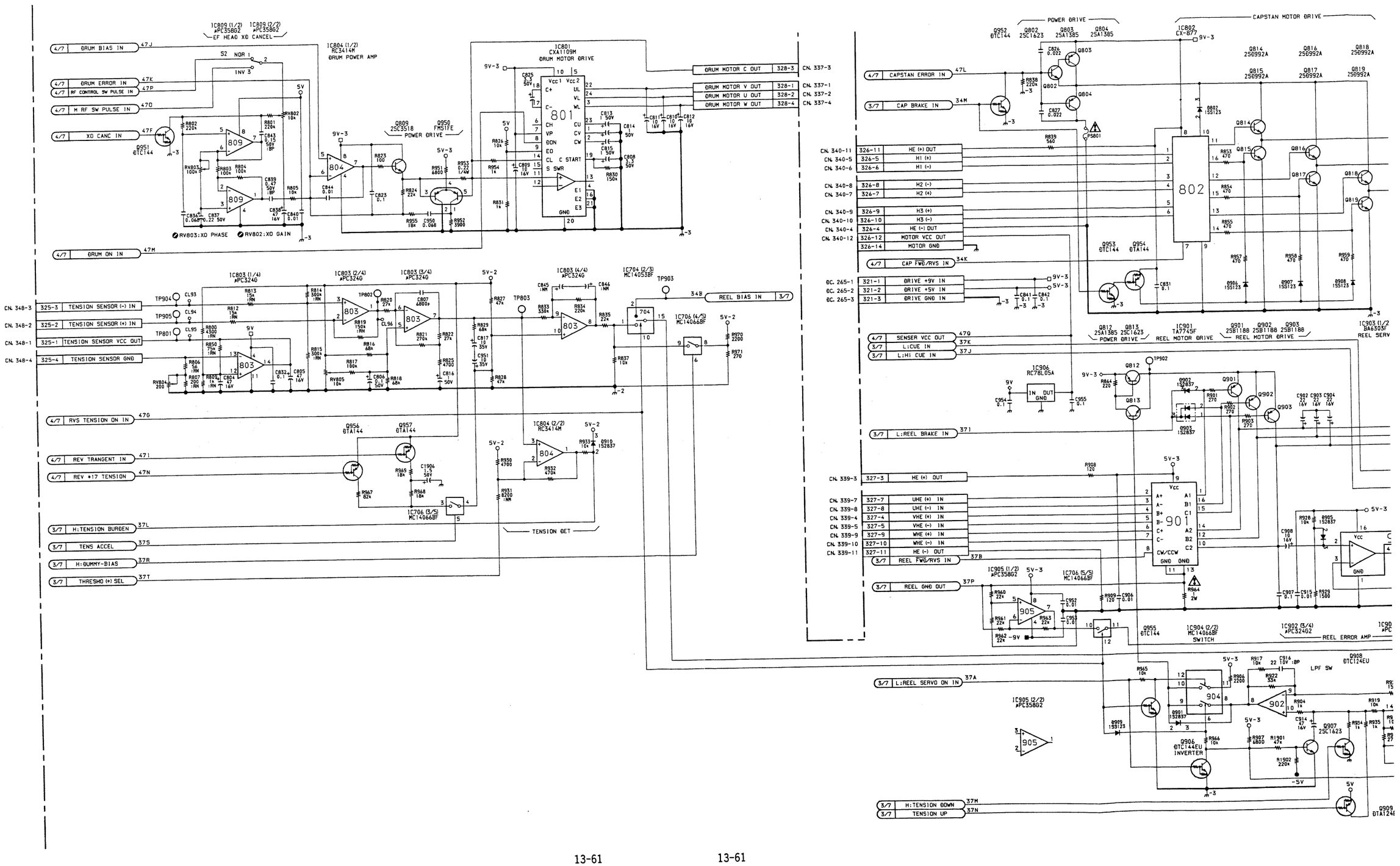
DRUM BIAS IN 47J
DRUM ERROR IN 47K
RF CONTROL SW PULSE IN 47P
M RF SW PULSE IN 47Q
XO CANC IN 47F
DRUM ON IN 47M
1C809 (1/2) μPC358G2 1C809 (2/2) μPC358G2 EF HEAD XO CANCEL
1C804 (1/2) RC3414M DRUM POWER AMP
1C801 CXA1109M DRUM MOTOR DRIVE
Q809 2SC5518 Q950 FMS1FE POWER DRIVE
DRUM MOTOR C OUT 328-3 CN. 337-3
DRUM MOTOR V OUT 328-1 CN. 337-1
DRUM MOTOR U OUT 328-2 CN. 337-2
DRUM MOTOR W OUT 328-4 CN. 337-4
RV803:XO PHASE RV802:XO GAIN
TENSION SENSOR (-) IN 325-3 CN. 348-3
TENSION SENSOR (+) IN 325-2 CN. 348-2
TENSION SENSOR VCC OUT 325-1 CN. 348-1
TENSION SENSOR GND 325-4 CN. 348-4
1C803 (1/4) μPC324G 1C803 (2/4) μPC324G 1C803 (3/4) μPC324G 1C803 (4/4) μPC324G
1C704 (2/3) MC14053BF
REEL BIAS IN 34B 3/7
1C706 (4/5) MC14066BF
RVS TENSION ON IN 47G
REV TRANGENT IN 47I
REV *17 TENSION 47N
Q954 DTA144 Q957 DTA144
1C804 (2/2) RC3414M
1C706 (3/5) MC14066BF
TENSION DET
H:TENSION BURDEN 37L
TENS ACCEL 37S
H:DUMMY-BIAS 37R
THRESHO (+) SEL 37T
POWER DRIVE
CAPSTAN MOTOR DRIVE
Q952 DTC144 Q802 2SC1623 Q803 2SA1385 Q804 2SA1385
1C802 CX-877
CAPSTAN ERROR IN 47L
CAP BRAKE IN 34M
Q814 2SD992A Q815 2SD992A Q816 2SD992A Q817 2SD992A Q818 2SD992A Q819 2SD992A
HE (+) OUT 326-11 CN. 340-11
H1 (+) 326-5 CN. 340-5
H1 (-) 326-6 CN. 340-6
H2 (-) 326-8 CN. 340-8
H2 (+) 326-7 CN. 340-7
H3 (+) 326-9 CN. 340-9
H3 (-) 326-10 CN. 340-10
HE (-) OUT 326-4 CN. 340-4
MOTOR VCC OUT 326-12 CN. 340-12
MOTOR GND 326-14 CN. 340-14
CAP FWD/RVS IN 34K
Q953 DTC144 Q954 DTA144
DRIVE +9V IN 321-1 DC. 265-1
DRIVE +5V IN 321-2 DC. 265-2
DRIVE GND IN 321-3 DC. 265-3
SENSER VCC OUT 47Q
L:CUE IN 37K
L:HI CUE IN 37J
Q812 2SA1385 2SC1623 POWER DRIVE
1C901 TA7745F REEL MOTOR DRIVE
Q901 2SB1188 Q902 2SB1188 Q903 2SB1188 REEL MOTOR DRIVE
1C903 (1/2) BA6305F REEL SERV
1C906 RC78L05A
Q812 Q813
L:REEL BRAKE IN 37I
HE (+) OUT 327-3 CN. 339-3
UHE (+) IN 327-7 CN. 339-7
UHE (-) IN 327-8 CN. 339-8
VHE (+) IN 327-4 CN. 339-4
VHE (-) IN 327-5 CN. 339-5
WHE (+) IN 327-9 CN. 339-9
WHE (-) IN 327-10 CN. 339-10
HE (-) OUT 327-11 CN. 339-11
REEL FWD/RVS IN 37B
REEL GND OUT 37P
1C905 (1/2) μPC358G2
1C706 (5/5) MC14066BF
1C904 (2/2) MC14066BF SWITCH
1C902 (3/4) μPC324G2 REEL ERROR AMP
Q955 DTC144
L:REEL SERVO ON IN 37A
1C905 (2/2) μPC358G2
LPF SW
Q908 DTC124EU
Q906 DTC144EU INVERTER
Q907 2SC1623
H:TENSION DOWN 37M
TENSION UP 37N
Q909 DTA124E

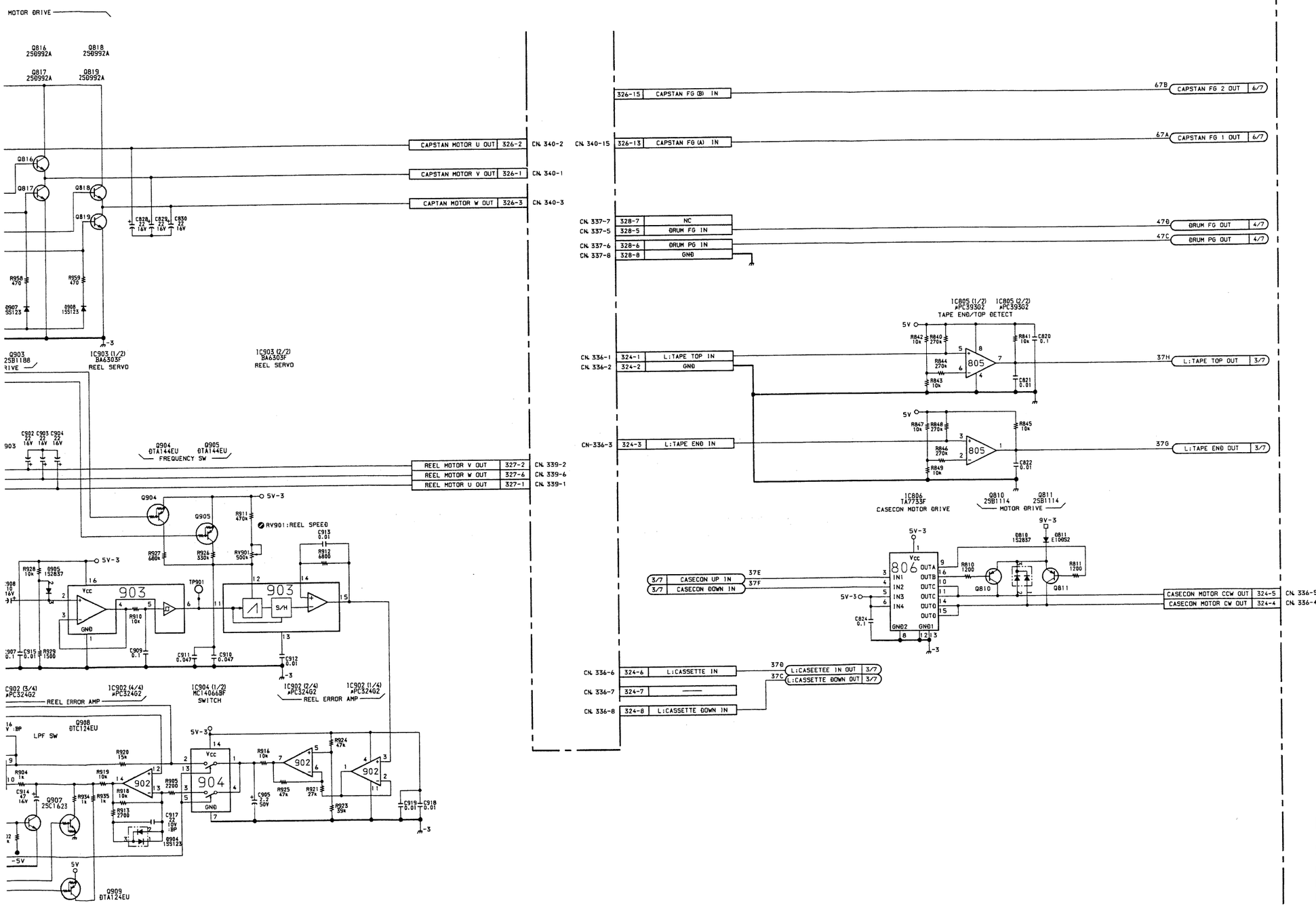

Motor Drive

SST-2 BOARD (8/8)

BOARD NO. 1-642-951-13, 14
EVO-9850 (J) : # 10001—
EVO-9850 (UC) : # 10031—

SST-2 (8/8) **SST-2 (8/8)**

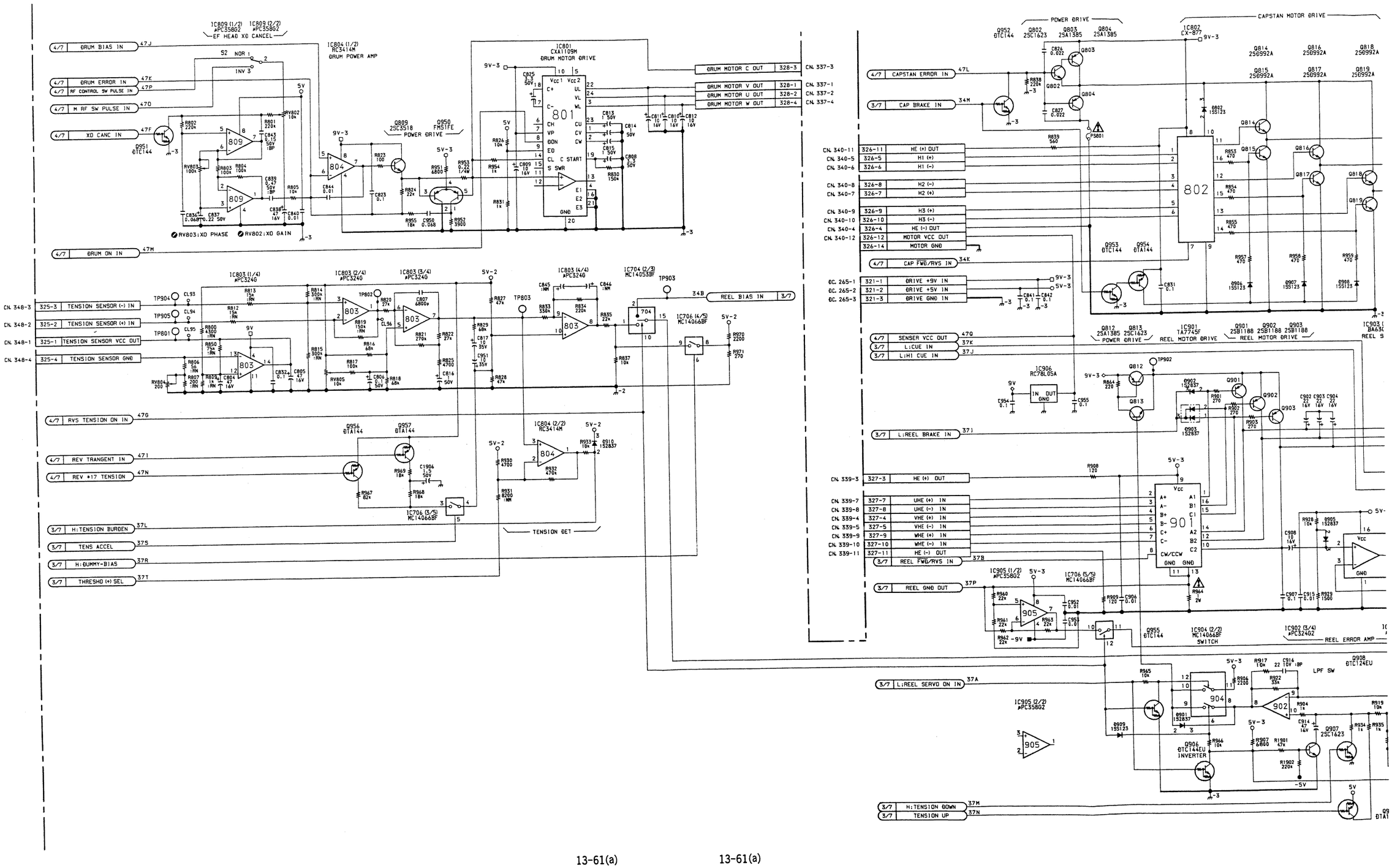

13-61(a) 13-61(a)

A B C D E F G H

N MOTOR DRIVE

Q816 2SD992A Q818 2SD992A
Q817 2SD992A Q819 2SD992A

CAPSTAN MOTOR U OUT | 326-2 | CN. 340-2
CAPSTAN MOTOR V OUT | 326-1 | CN. 340-1
CAPTAN MOTOR W OUT | 326-3 | CN. 340-3

C828 22 16V C829 22 16V C830 22 16V
R958 470 R959 470
D907 1SS123 D908 1SS123

Q903 2SB1188 DRIVE
IC903 (1/2) BA6303F REEL SERVO
IC903 (2/2) BA6303F REEL SERVO

C902 C903 C904 22 16V

Q904 DTA144EU Q905 DTA144EU FREQUENCY SW

REEL MOTOR V OUT | 327-2 | CN. 339-2
REEL MOTOR W OUT | 327-6 | CN. 339-6
REEL MOTOR U OUT | 327-1 | CN. 339-1

Q904 Q905 R911 470k 5V-3
RV901:REEL SPEED
R927 680k R924 330k RV901 500k C913 0.01 R912 6800
R928 10k D905 1S2837 5V-3
C908 10 16V
IC903 903 Vcc GND TP901 S/H
R910 10k
C907 0.1 C915 0.01 R929 1500 C909 0.1 C911 0.047 C910 0.047 C912 0.01

IC902 (3/4) μPC324G2 REEL ERROR AMP
IC902 (4/4) μPC324G2
IC904 (1/2) MC14066BF SWITCH
IC902 (2/4) μPC324G2 REEL ERROR AMP
IC902 (1/4) μPC324G2

Q908 DTC124EU LPF SW
5V-3
IC904 904 Vcc GND
IC902 902
R904 1k R920 15k R919 10k R918 10k R913 2700 R914 10k R924 47k R925 47k R921 27k R923 39k
C914 47 16V C917 22 10V :BP C905 2.2 50V C919 0.01 C918 0.01
Q907 2SC1623 D904 1SS123
-5V 5V Q909 DTA124EU

326-15 CAPSTAN FG (B) IN | 67B CAPSTAN FG 2 OUT | 6/7
CN. 340-15 326-13 CAPSTAN FG (A) IN | 67A CAPSTAN FG 1 OUT | 6/7

CN. 337-7 328-7 NC
CN. 337-5 328-5 DRUM FG IN | 47B DRUM FG OUT | 4/7
CN. 337-6 328-6 DRUM PG IN | 47C DRUM PG OUT | 4/7
CN. 337-8 328-8 GND

IC805 (1/2) μPC393G2 IC805 (2/2) μPC393G2
TAPE END/TOP DETECT
5V
R842 10k R840 270k R841 10k C820 0.1
IC805 805
R844 270k R843 10k C821 0.01

CN. 336-1 324-1 L:TAPE TOP IN | 37H L:TAPE TOP OUT | 3/7
CN. 336-2 324-2 GND

5V
R847 10k R848 270k R845 10k
IC805 805
R844 270k R849 10k C822 0.01

CN-336-3 324-3 L:TAPE END IN | 37G L:TAPE END OUT | 3/7

IC806 TA7733F CASECON MOTOR DRIVE
Q810 2SB1114 Q811 2SB1114 MOTOR DRIVE

3/7 CASECON UP IN | 37E
3/7 CASECON DOWN IN | 37F
5V-3
IC806 806 Vcc GND1 GND2 IN1 IN2 IN3 IN4 OUTA OUTB OUTC OUTD OUTE OUTF
C824 0.1
9V-3
R810 1S2837 D811 E100S2
R810 1200 R811 1200 Q810 Q811

CASECON MOTOR CCW OUT | 324-5 | CN. 336-5
CASECON MOTOR CW OUT | 324-4 | CN. 336-4

CN. 336-6 324-6 L:CASSETTE IN | 37D L:CASEETEE IN OUT | 3/7
CN. 336-7 324-7 | 37C L:CASSETTE DOWN OUT | 3/7
CN. 336-8 324-8 L:CASSETTE DOWN IN

Motor Drive

SST-2 BOARD (8/8)

BOARD NO. 1-642-951-13, 14
EVO-9850 (J) : # 10001—10120
EVO-9850 (UC) : # 10031—10340

13-61(a) 13-61(a)

I J K L M N O P

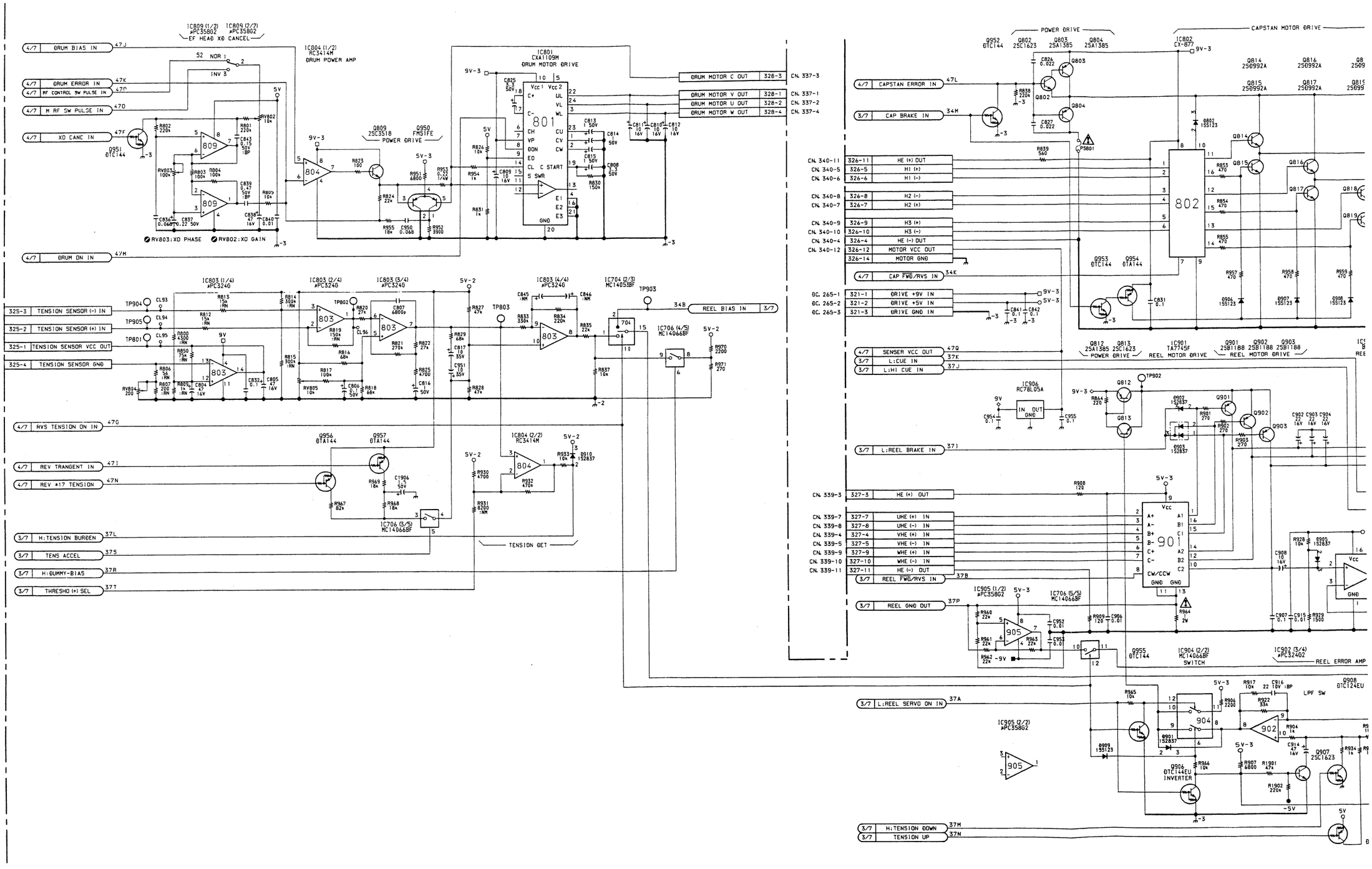
DRUM BIAS IN
DRUM ERROR IN
RF CONTROL SW PULSE IN
M RF SW PULSE IN
XO CANC IN
DRUM ON IN
IC809 (1/2) μPC358G2
IC809 (2/2) μPC358G2
EF HEAD XO CANCEL
IC804 (1/2) RC3414M
DRUM POWER AMP
IC801 CXA1109M
DRUM MOTOR DRIVE
DRUM MOTOR C OUT
DRUM MOTOR V OUT
DRUM MOTOR U OUT
DRUM MOTOR W OUT
RV803:XO PHASE
RV802:XO GAIN
TENSION SENSOR (-) IN
TENSION SENSOR (+) IN
TENSION SENSOR VCC OUT
TENSION SENSOR GND
IC803 (1/4) μPC324G
IC803 (2/4) μPC324G
IC803 (3/4) μPC324G
IC803 (4/4) μPC324G
IC704 (2/3) MC14053BF
REEL BIAS IN
RVS TENSION ON IN
REV TRANGENT IN
REV #17 TENSION
H:TENSION BURDEN
TENS ACCEL
H:DUMMY-BIAS
THRESHO (+) SEL
Q956 DTA144
Q957 DTA144
IC804 (2/2) RC3414M
IC706 (3/5) MC14066BF
TENSION DET
POWER DRIVE
CAPSTAN MOTOR DRIVE
IC802 CX-877
CAPSTAN ERROR IN
CAP BRAKE IN
HE (+) OUT
HE (-) OUT
H1 (+)
H1 (-)
H2 (-)
H2 (+)
H3 (+)
H3 (-)
MOTOR VCC OUT
MOTOR GND
CAP FWD/RVS IN
DRIVE +9V IN
DRIVE +5V IN
DRIVE GND IN
SENSER VCC OUT
L:CUE IN
L:HI CUE IN
REEL MOTOR DRIVE
IC906 RC78L05A
L:REEL BRAKE IN
HE (+) OUT
UHE (+) IN
UHE (-) IN
VHE (+) IN
VHE (-) IN
WHE (+) IN
WHE (-) IN
HE (-) OUT
REEL FWD/RVS IN
REEL GND OUT
IC905 (1/2) μPC358G2
IC706 (5/5) MC14066BF
IC904 (2/2) MC14066BF
SWITCH
IC902 (3/4) μPC324G2
REEL ERROR AMP
L:REEL SERVO ON IN
IC905 (2/2) μPC358G2
LPF SW
Q906 DTC144EU INVERTER
H:TENSION DOWN
TENSION UP

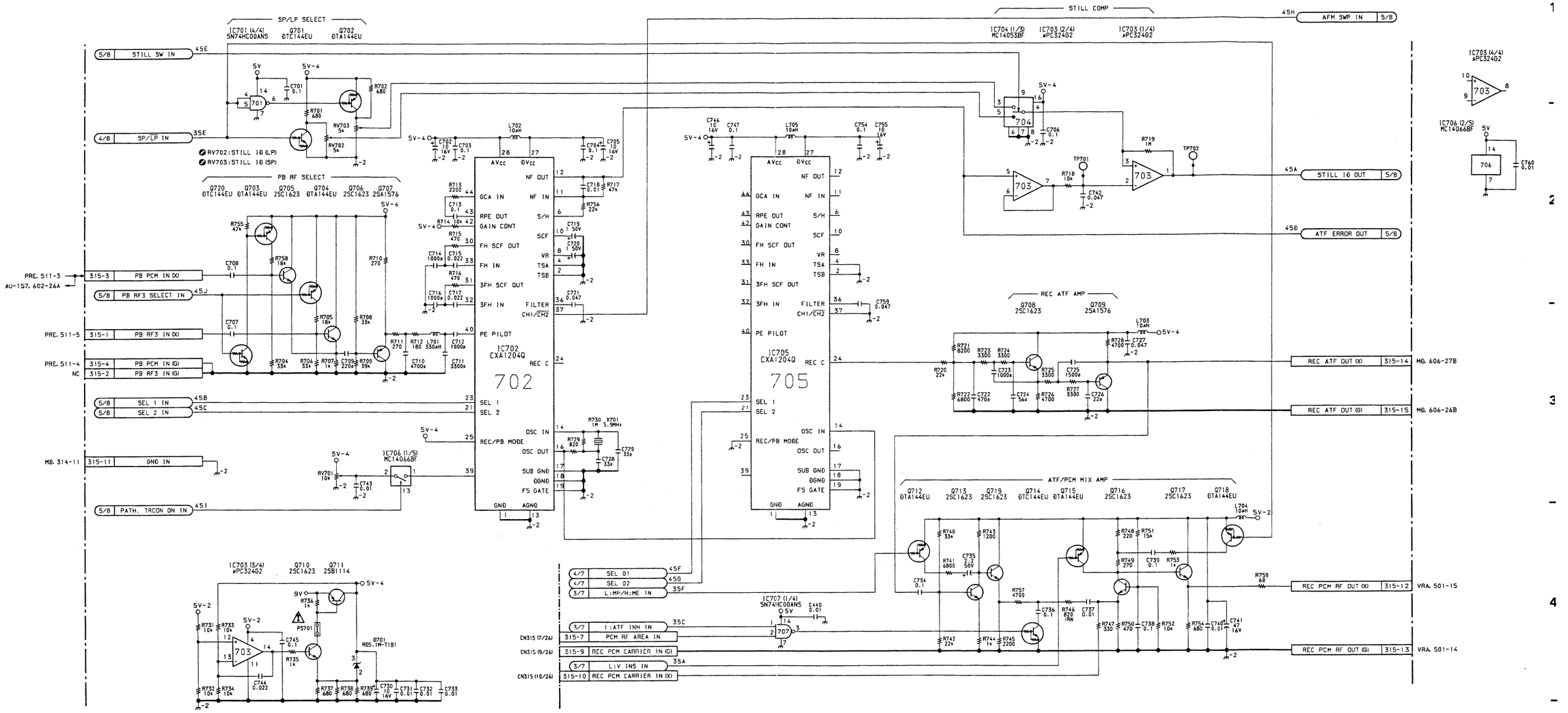

ATF Process

SST-2 BOARD (6/8)

BOARD NO. 1-642-951-13, 14
EVO-9850 (J) : # 10001—
EVO-9850 (UC) : # 10031—

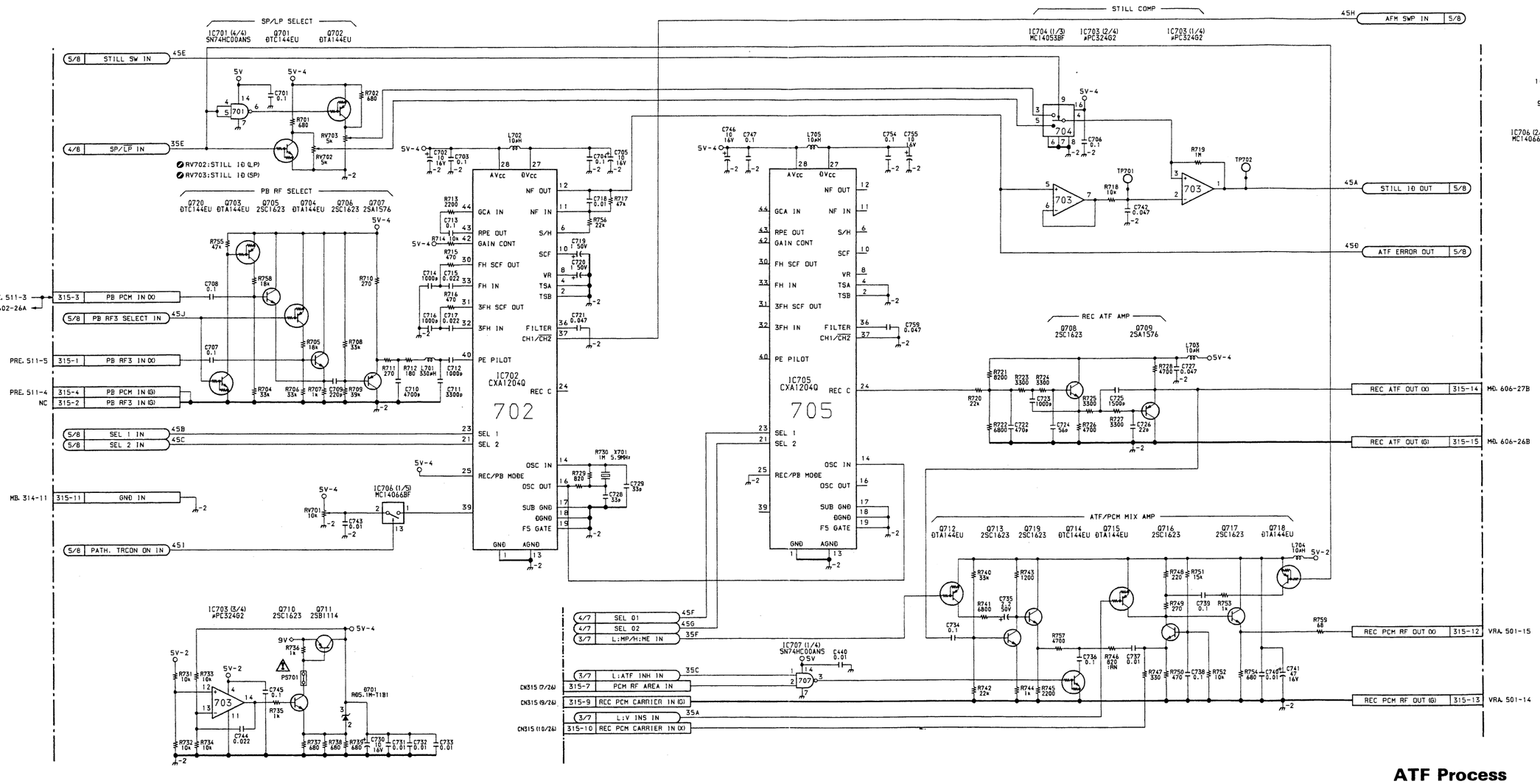

ATF Process

SST-2 BOARD (6/8)

BOARD NO. 1-642-951-13, 14
EVO-9850 (J) : # 10001—10120
EVO-9850 (UC) : # 10031—10340

13-57(a) 13-57(a)

A | B | C | D | E | F | G | H

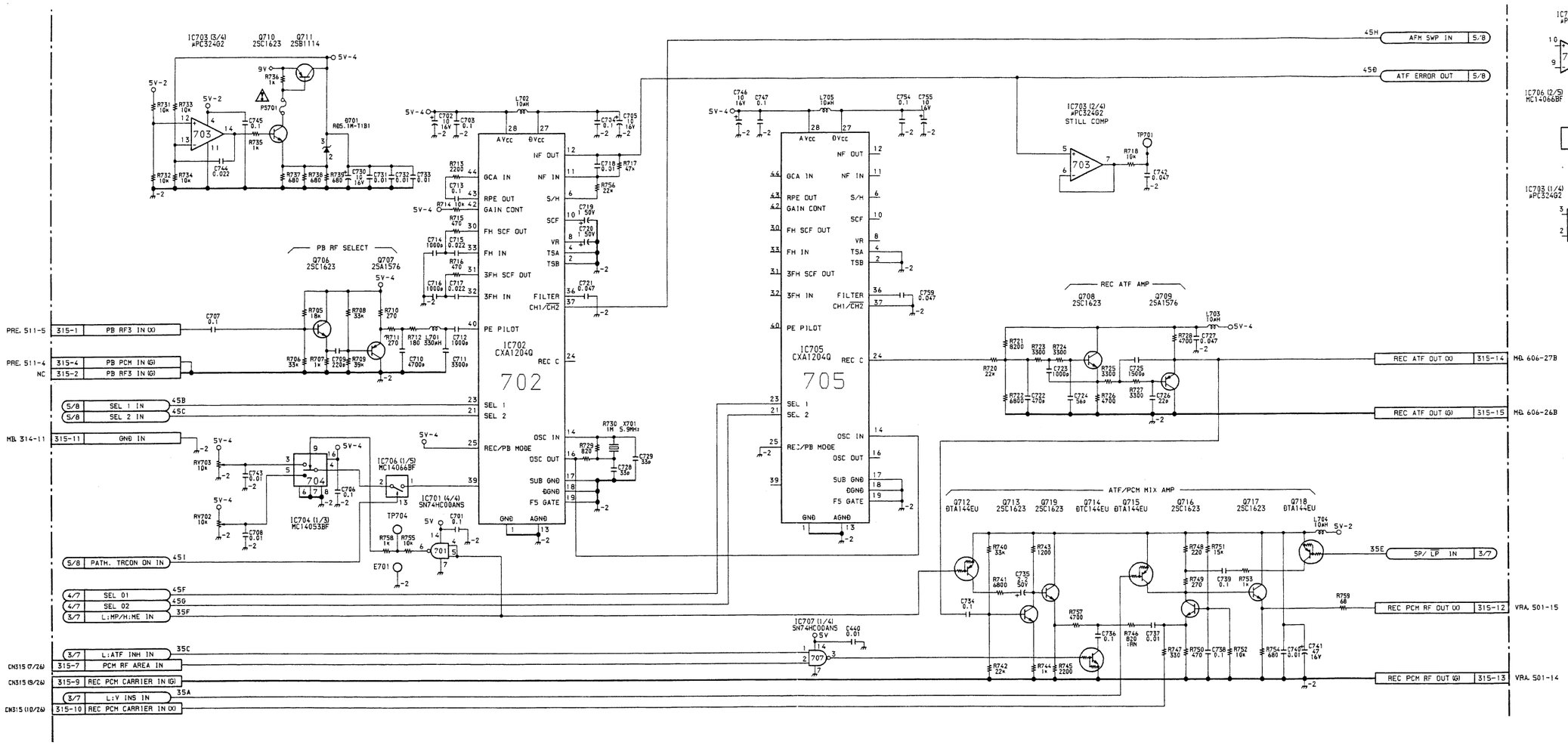

ATF Process

SST-2 BOARD (6/8)

BOARD NO. 1-642-951-15
EVO-9850 (J) : # 10121—
EVO-9850 (UC) : # 10341—

13-57 (b) 13-57 (b)

A B C D E F G H

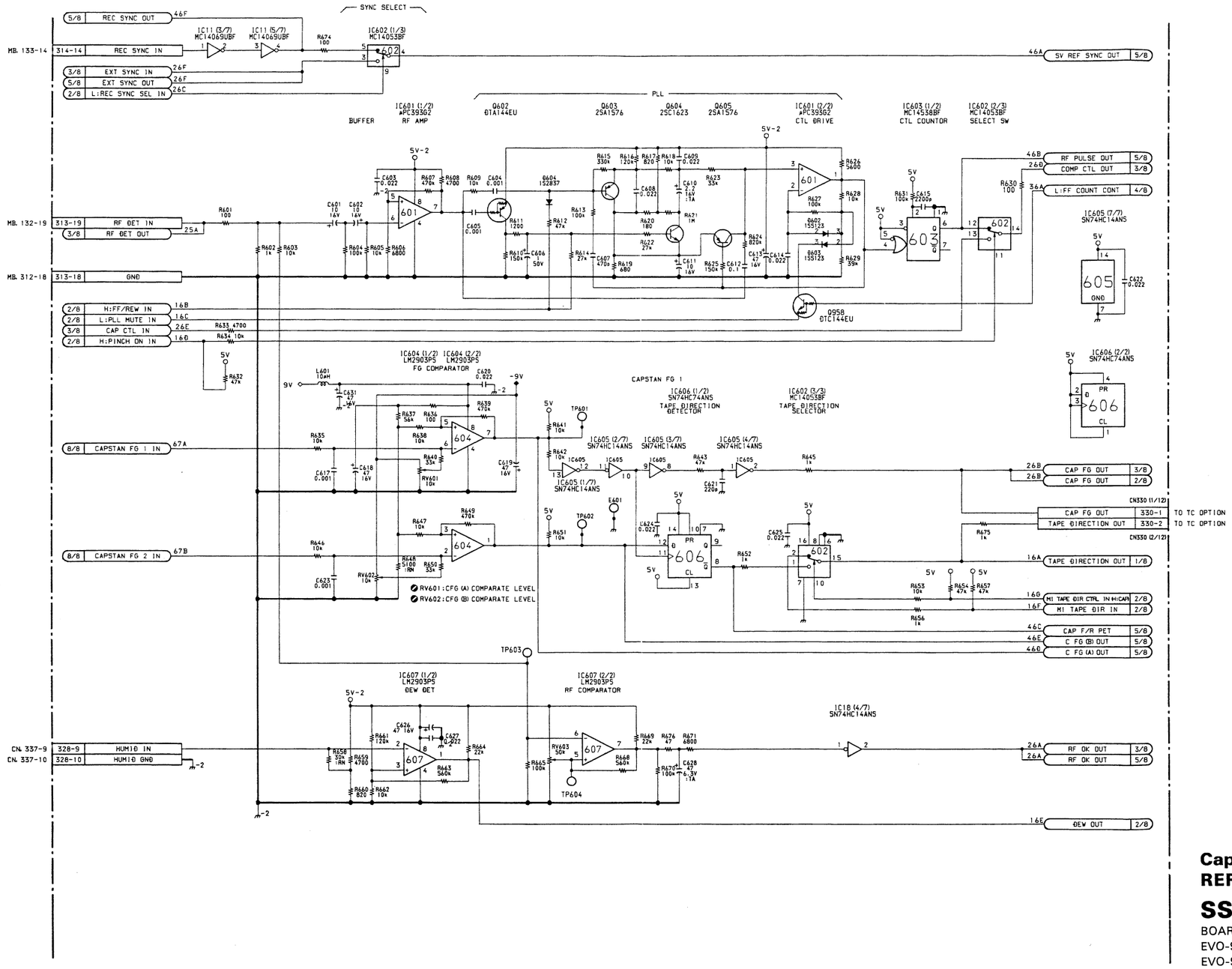

Capstan FG Amp, REF Envelope Detector

SST-2 BOARD (7/8)

BOARD NO. 1-642-951-13, 14, 15
EVO-9850 (J) : #10001—
EVO-9850 (UC) : #10031—

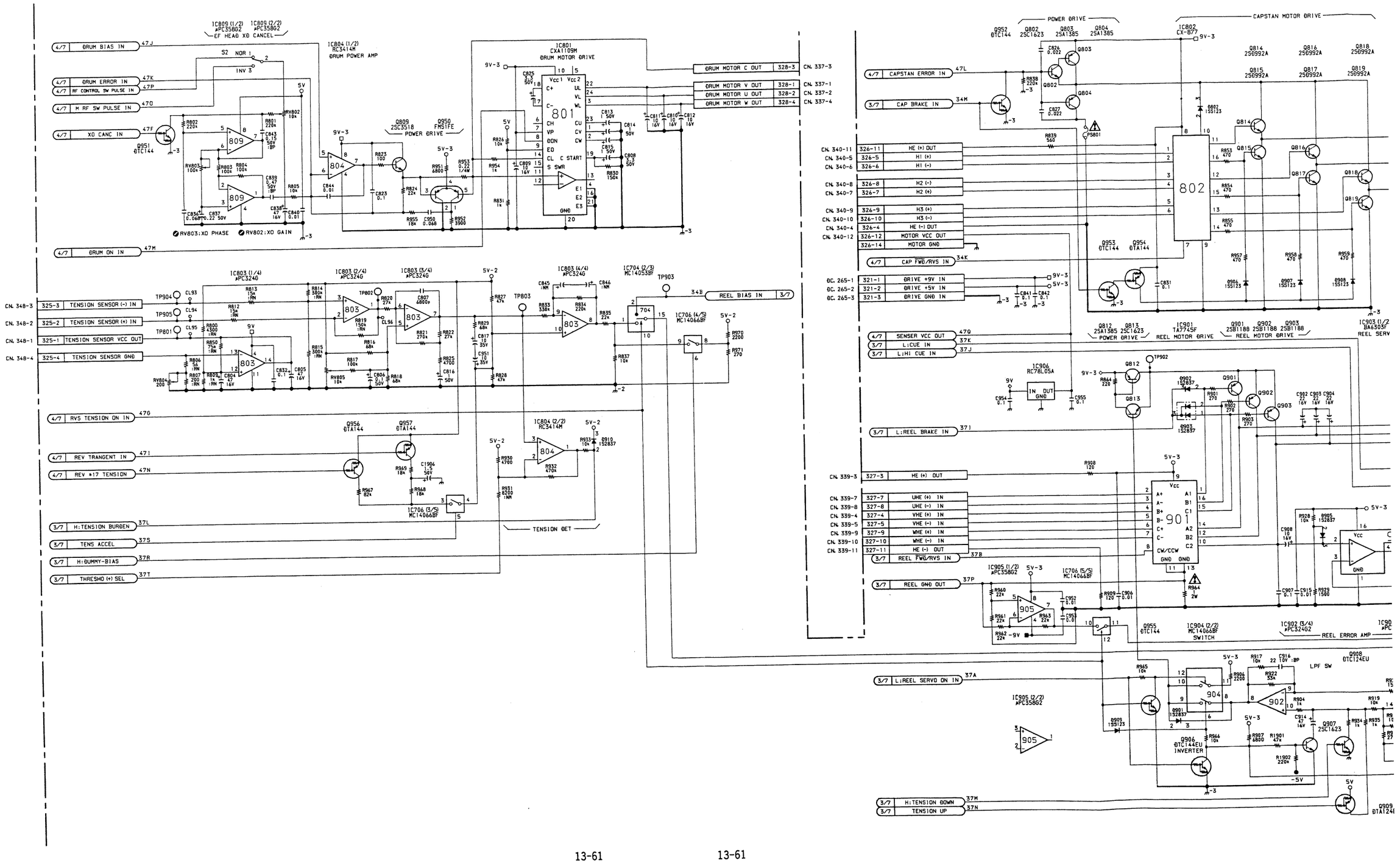

13-61 13-61

A B C D E F G H

SST-2 (8/8) SST-2 (8/8)

MOTOR DRIVE

Q816 2SD992A
Q818 2SD992A
Q817 2SD992A
Q819 2SD992A

CAPSTAN MOTOR U OUT 326-2 CN. 340-2
CAPSTAN MOTOR V OUT 326-1 CN. 340-1
CAPTAN MOTOR W OUT 326-3 CN. 340-3

C828 22 16V
C829 22 16V
C830 22 16V

R958 470
R959 470
D907 1SS123
D908 1SS123

Q903 2SB1188 DRIVE

IC903 (1/2) BA6303F REEL SERVO

IC903 (2/2) BA6303F REEL SERVO

C902 22 16V
C903 22 16V
C904 22 16V

Q904 DTA144EU
Q905 DTA144EU
FREQUENCY SW

REEL MOTOR V OUT 327-2 CN. 339-2
REEL MOTOR W OUT 327-6 CN. 339-6
REEL MOTOR U OUT 327-1 CN. 339-1

5V-3
Q904
Q905
R911 470k
RV901:REEL SPEED
R927 680k
R924 330k
RV901 500k
C913 0.01
R912 6800

R928 10k
D905 1SZ837
Vcc
903
GND
TP901
R910 10k
C909 0.1
C911 0.047
C910 0.047
C912 0.01
C907 0.1
C915 0.01
R929 1500

IC902 (5/4) μPC324G2 REEL ERROR AMP
IC902 (4/4) μPC324G2
IC904 (1/2) MC14066BF SWITCH
IC902 (2/4) μPC324G2
IC902 (1/4) μPC324G2 REEL ERROR AMP

Q908 DTC124EU
LPF SW

R920 15k
R904 1k
R919 10k
R918 10k
R905 2200
R914 47 16V
Q907 2SC1623
R934 1k
R935 1k
R913 2700
C917 22 10V :BP
D904 1SS123
902
904
R916 10k
R924 47k
R925 47k
R921 27k
R923 39k
C905 2.2 50V
C919 0.01
C918 0.01
-5V
5V
Q909 DTA124EU

326-15 CAPSTAN FG (B) IN 67B CAPSTAN FG 2 OUT 6/7
CN. 340-15 326-13 CAPSTAN FG (A) IN 67A CAPSTAN FG 1 OUT 6/7

CN. 337-7 328-7 NC
CN. 337-5 328-5 DRUM FG IN 47B DRUM FG OUT 4/7
CN. 337-6 328-6 DRUM PG IN 47C DRUM PG OUT 4/7
CN. 337-8 328-8 GND

IC805 (1/2) μPC393G2 IC805 (2/2) μPC393G2
TAPE END/TOP DETECT

5V
R842 10k
R840 270k
R844 270k
R843 10k
805
R841 10k
C820 0.1
C821 0.01

CN. 336-1 324-1 L:TAPE TOP IN 37H L:TAPE TOP OUT 3/7
CN. 336-2 324-2 GND

5V
R847 10k
R848 270k
R844 270k
R849 10k
805
R845 10k
C822 0.01

CN-336-3 324-3 L:TAPE END IN 37G L:TAPE END OUT 3/7

IC806 TA7733F CASECON MOTOR DRIVE
Q810 2SB1114
Q811 2SB1114
MOTOR DRIVE

5V-3
806
Vcc
IN1
IN2
IN3
IN4
OUTA
OUTB
OUTC
OUTD
GND2
GND1
C824 0.1
9V-3
D810 1SZ837
D811 ET06S2
R810 1200
R811 1200
Q810
Q811

3/7 CASECON UP IN 37E
3/7 CASECON DOWN IN 37F
CASECON MOTOR CCW OUT 324-5 CN. 336-5
CASECON MOTOR CW OUT 324-4 CN. 336-4

CN. 336-6 324-6 L:CASSETTE IN 37D L:CASEETEE IN OUT 3/7
CN. 336-7 324-7 37C L:CASSETTE DOWN OUT 3/7
CN. 336-8 324-8 L:CASSETTE DOWN IN

Motor Drive

SST-2 BOARD (8/8)

BOARD NO. 1-642-951-13, 14
EVO-9850 (J) : # 10001—
EVO-9850 (UC) : # 10031—

I J K L M N O P

SST-2 (8/8) SST-2 (8/8)

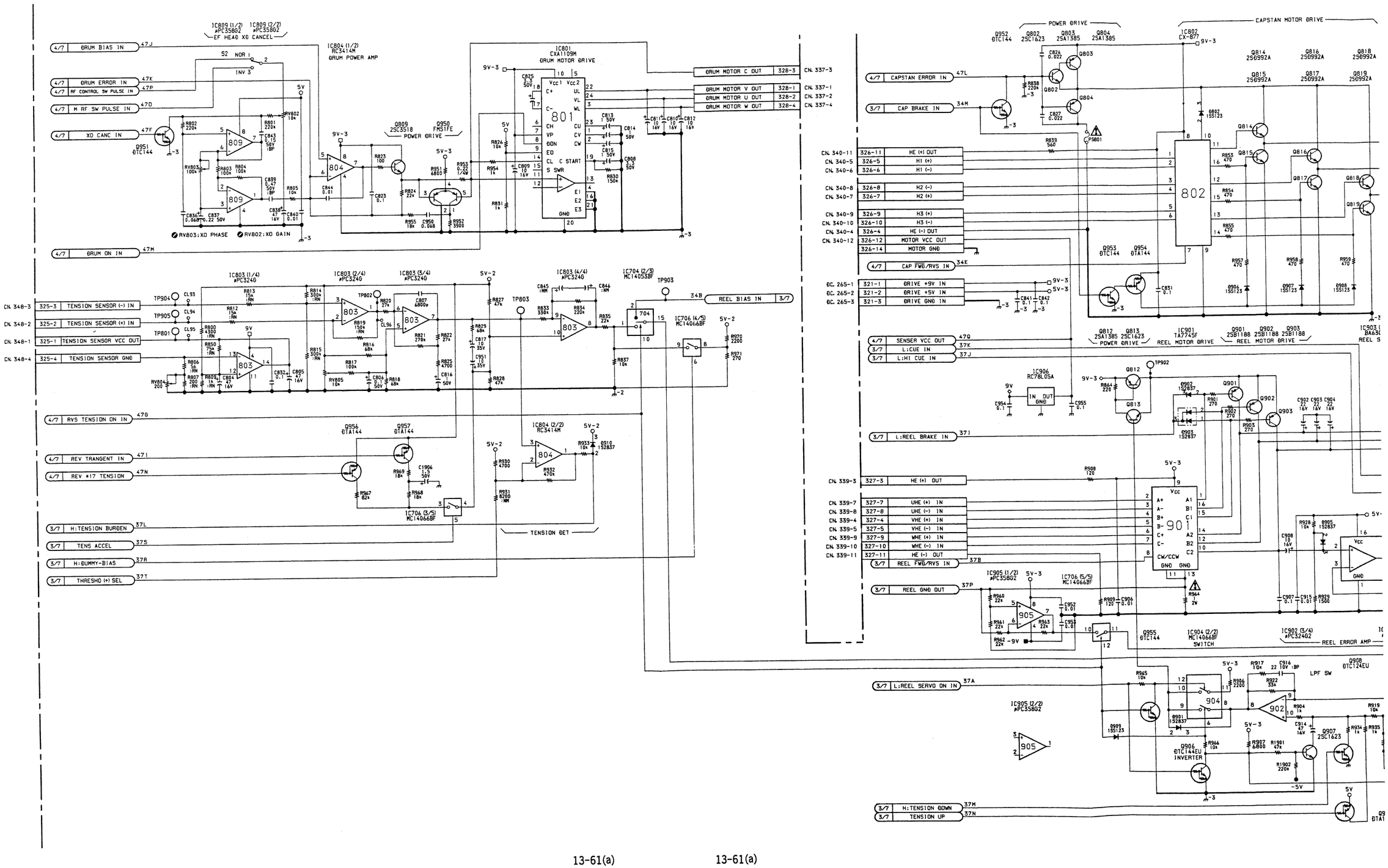

13-61(a) 13-61(a)

A | B | C | D | E | F | G | H

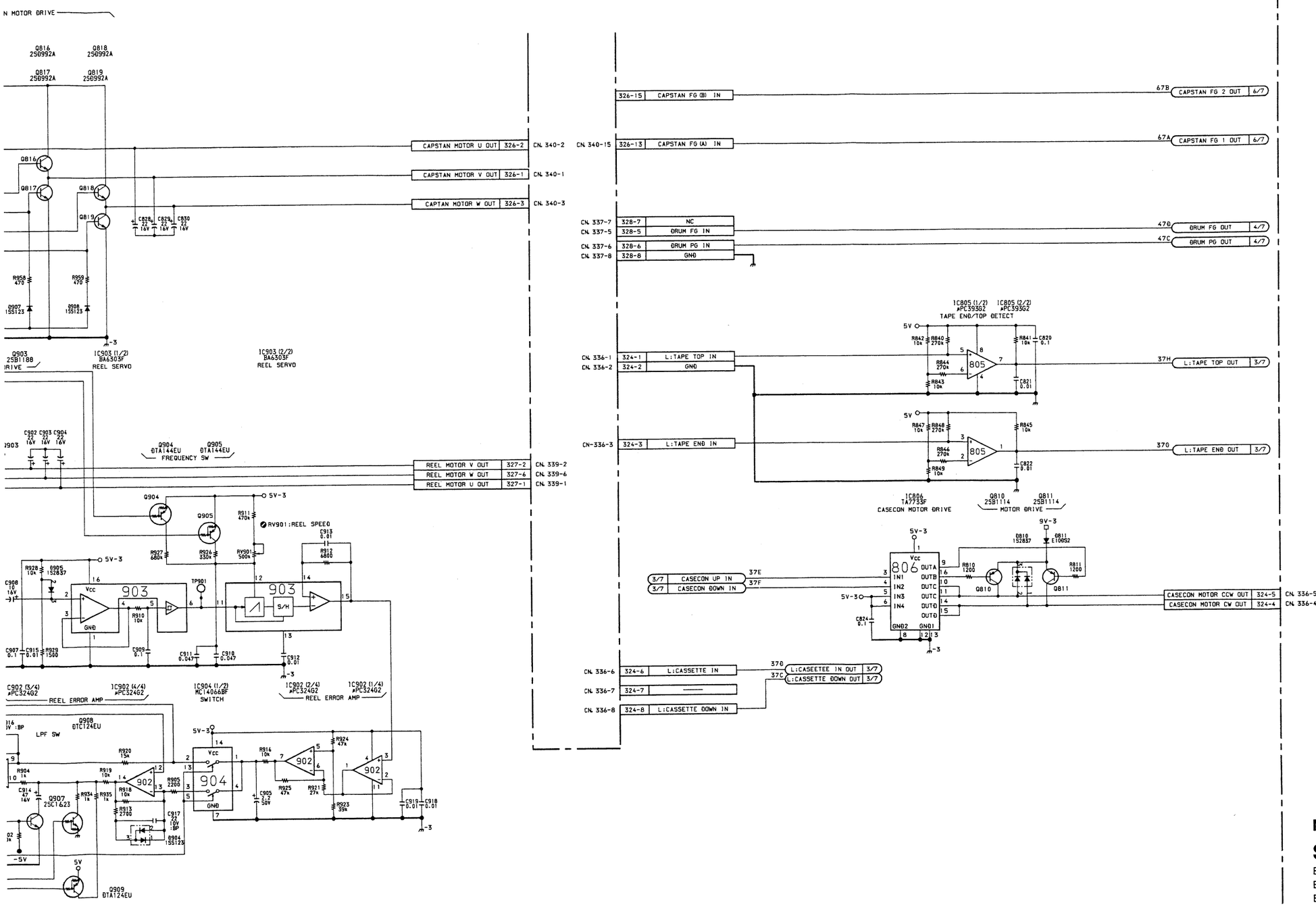

Motor Drive

SST-2 BOARD (8/8)

BOARD NO. 1-642-951-13, 14
EVO-9850 (J) : # 10001—10120
EVO-9850 (UC) : # 10031—10340

13-61(a) 13-61(a)

I J K L M N O P

SST-2 (8/8)　SST-2 (8/8)

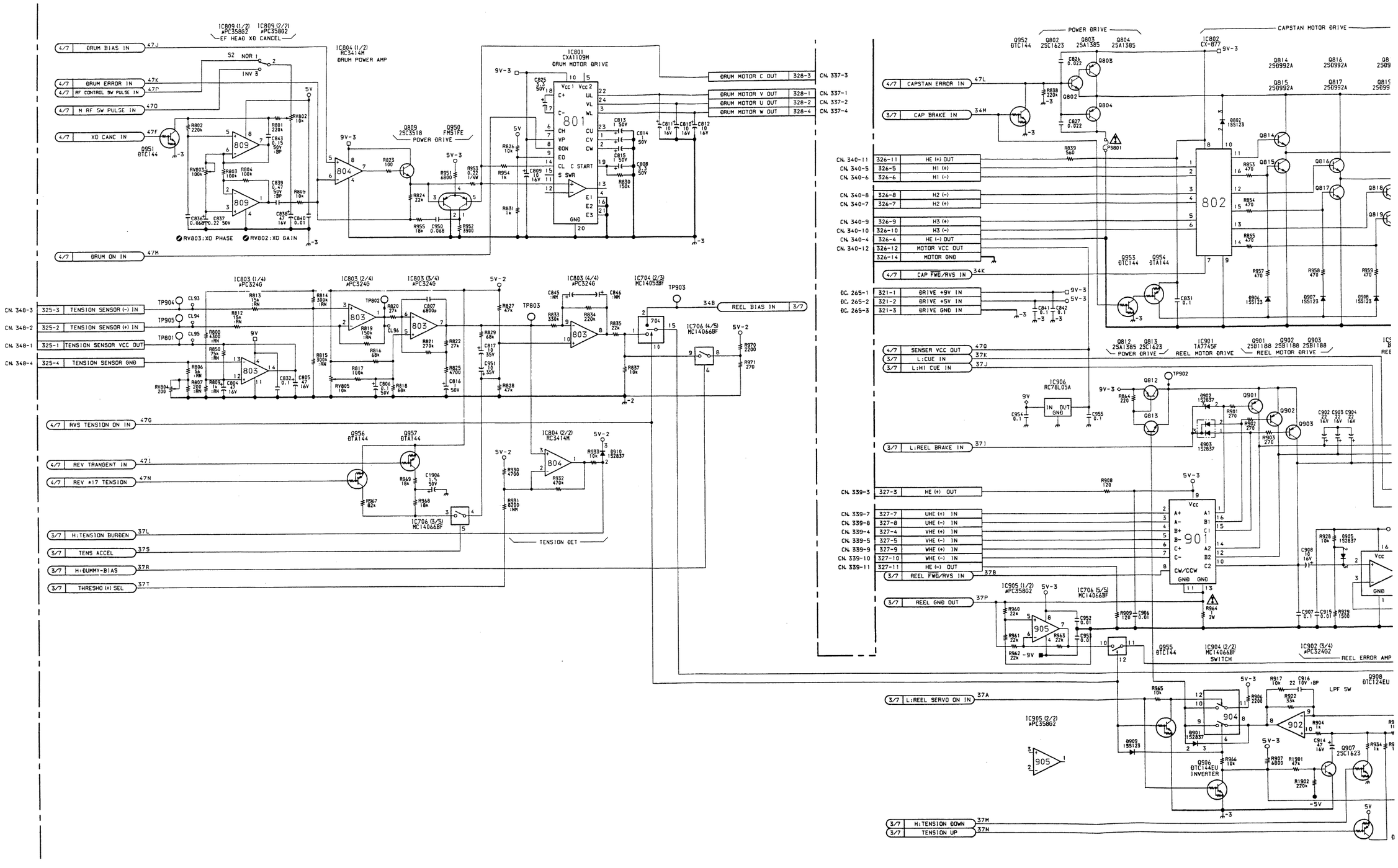

13-61(b)　13-61(b)

A | B | C | D | E | F | G | H

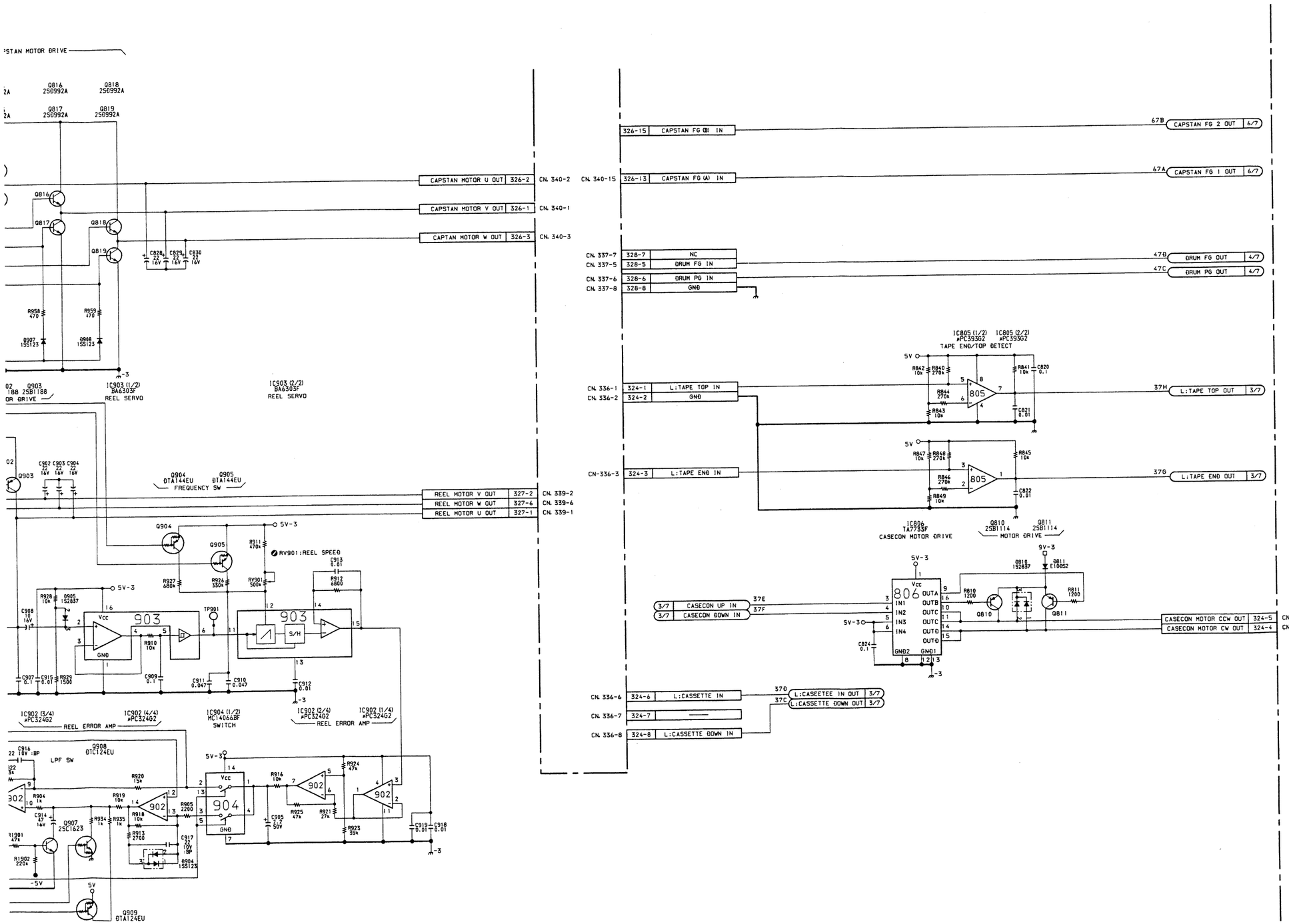

Motor Drive

SST-2 BOARD (8/8)

BOARD NO. 1-642-951-15
EVO-9850 (J) : # 10121—
EVO-9850 (UC) : # 10341—

13-61 (b) 13-61 (b)

I J K L M N O P

CN-551 BOARD
A Side

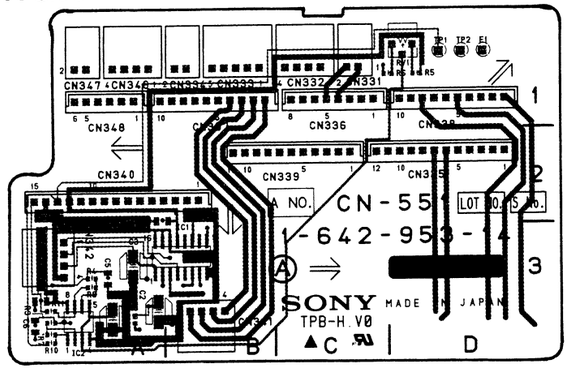

1-642-953-13, 14 A SIDE

A Side is the same as Component Side

CN-551 BOARD
B Side

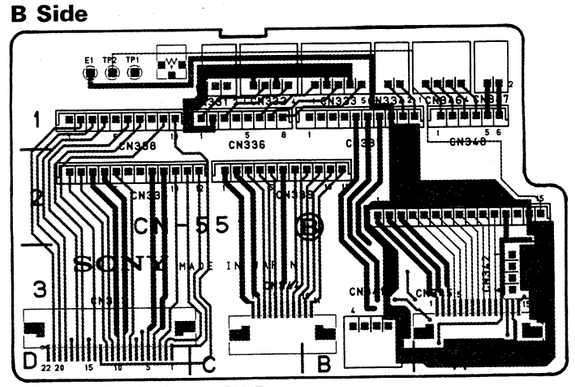

1-642-953-13, 14 B SIDE

B Side is the same as Soldering Side

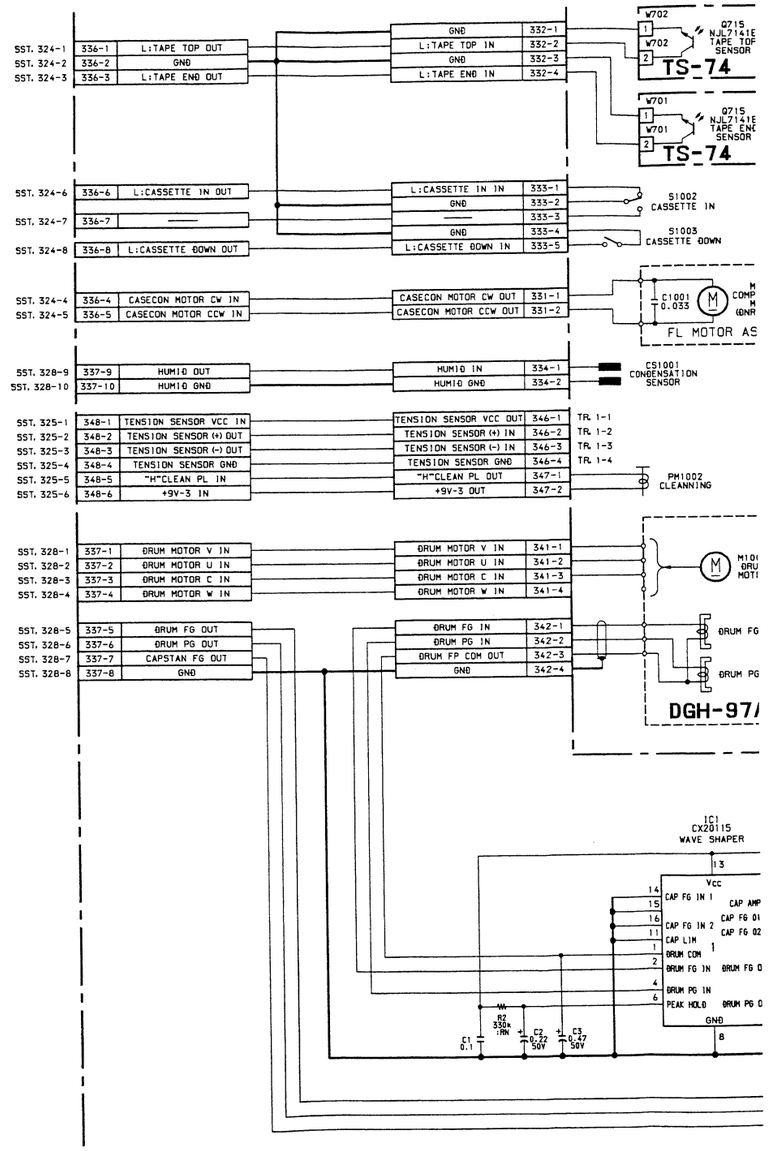

CN-551 BOARD

A Side

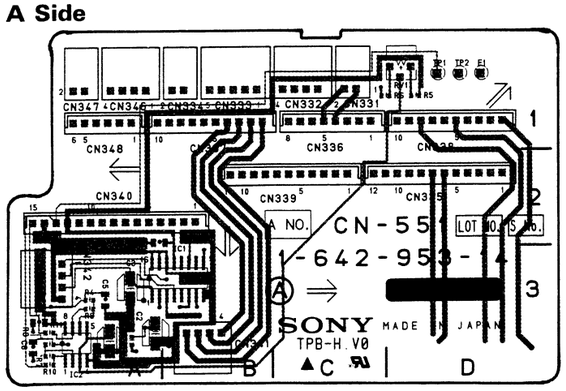

1-642-953-13, 14 A SIDE

A Side is the same as Component Side

B Side

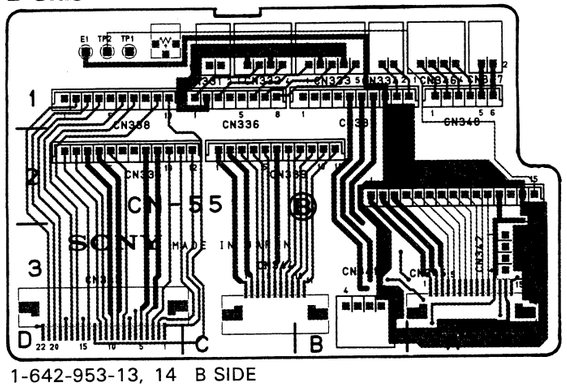

1-642-953-13, 14 B SIDE

B Side is the same as Soldering Side

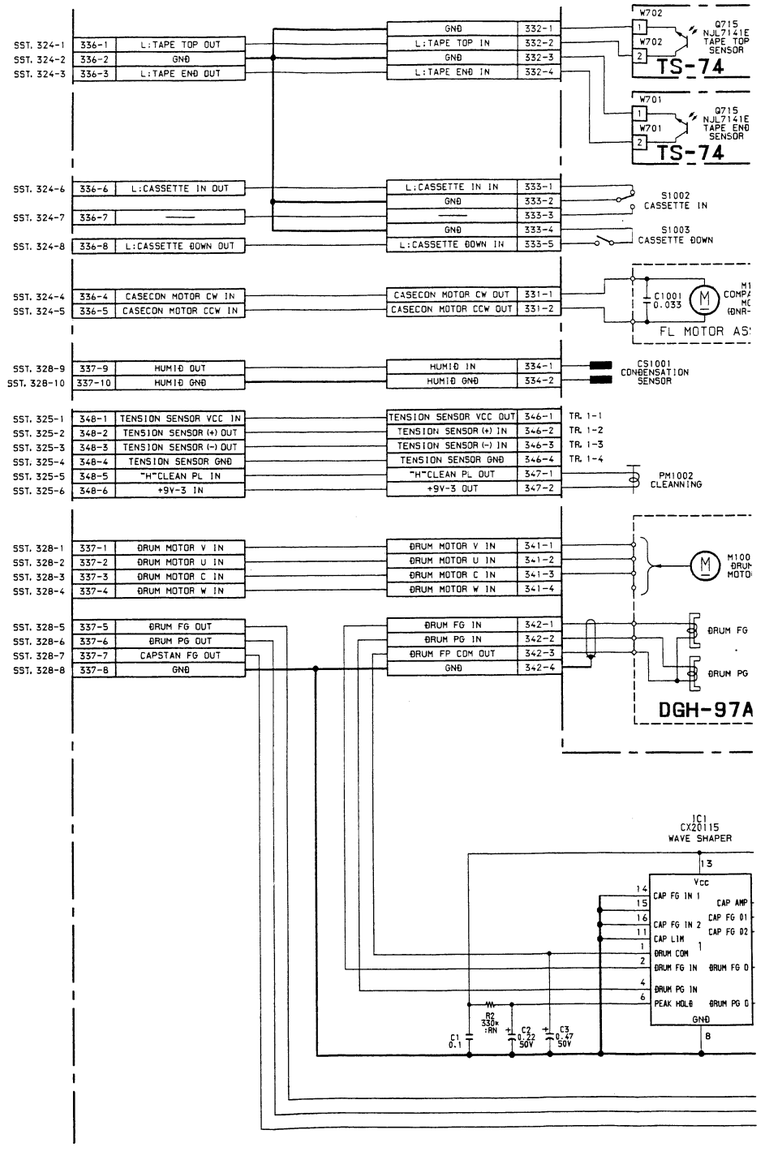

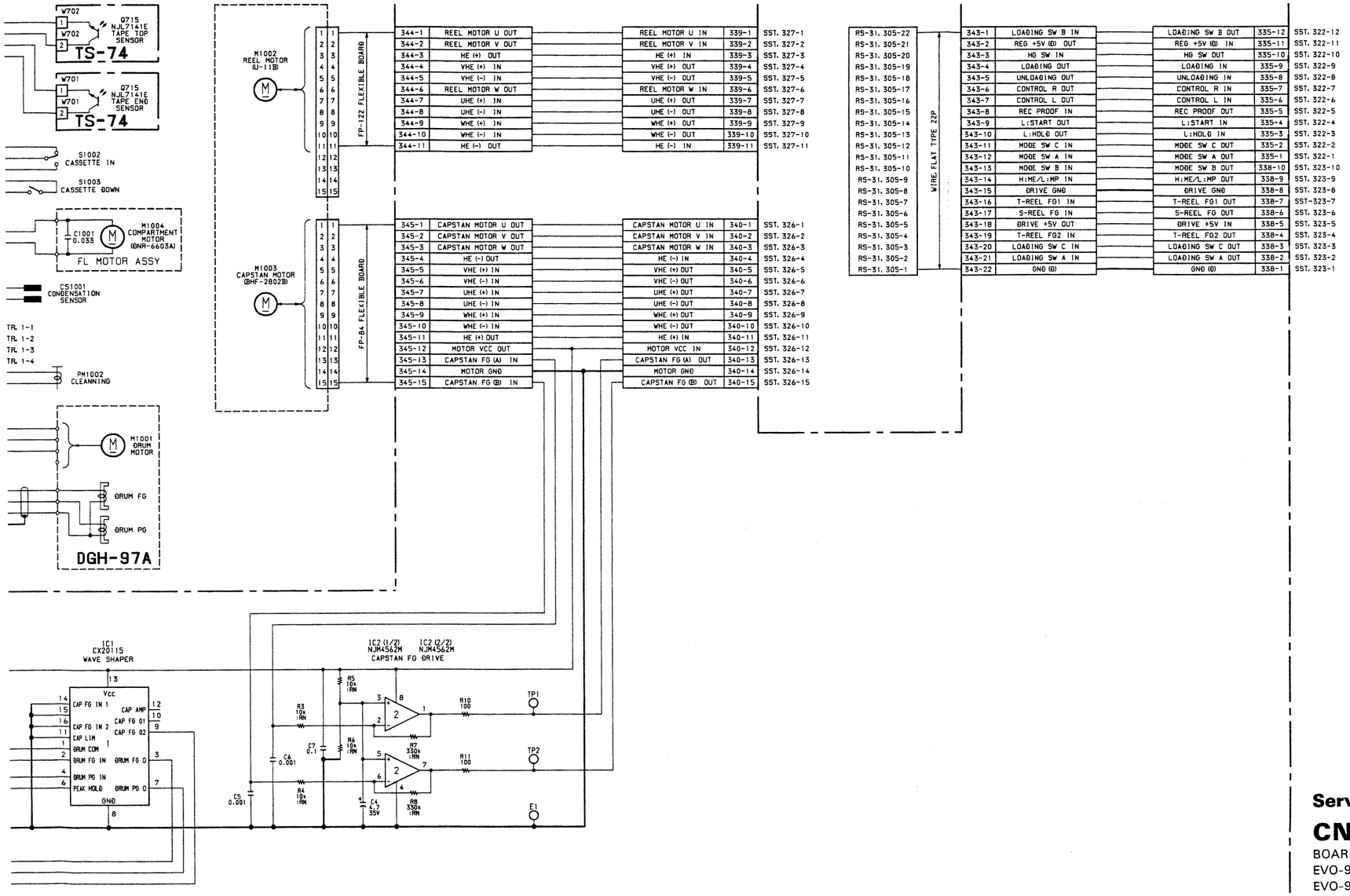

Servo Interface

CN-551 BOARD

BOARD NO. 1-642-953-11 (1)
EVO-9850 (J) : # 10001—
EVO-9850 (UC) : # 10031—

CN-551 CN-551

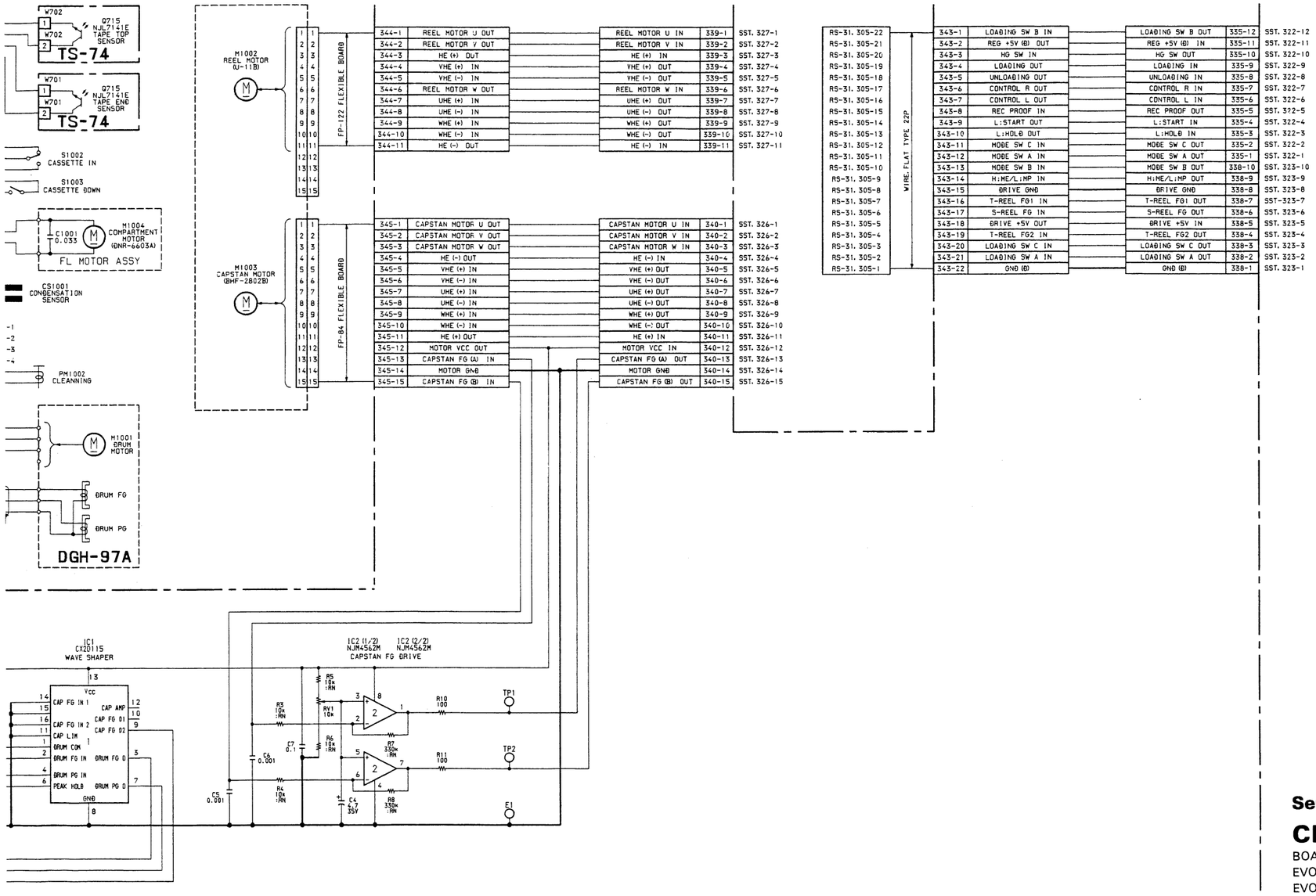

Servo Interface

CN-551 BOARD

BOARD NO. 1-642-953-13, 14 (1)
EVO-9850 (J) : # 10001—
EVO-9850 (UC) : # 10031—

13-62

RS-31, LD-1, LM-22, MS-36

RS-31 BOARD
Component Side

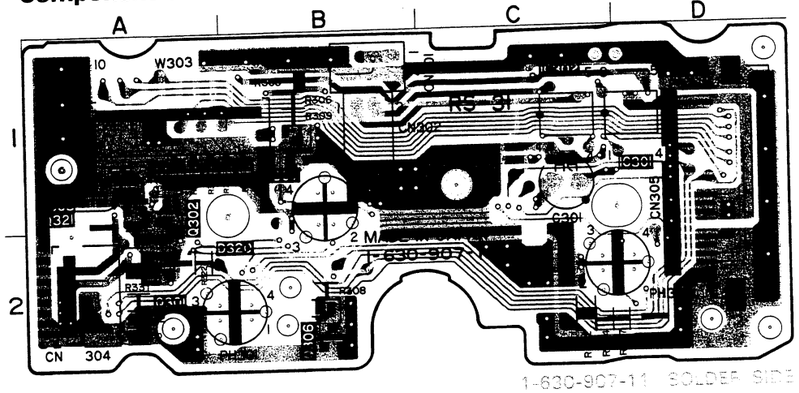

LD-1 BOARD
Solder Side

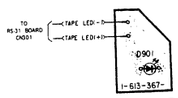

1-613-367-11 SOLDER SIDE

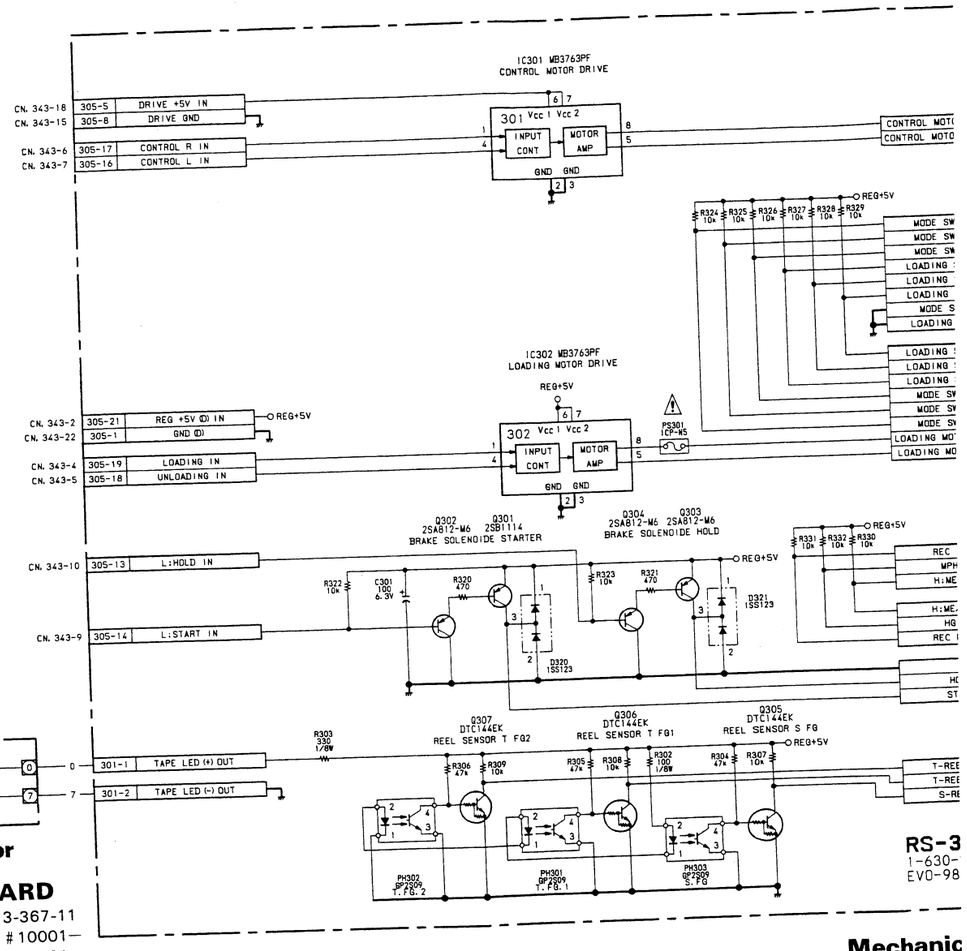

Tape Sensor

LD-1 BOARD

BOARD NO. 1-613-367-11
EVO-9850 (J) : #10001—
EVO-9850 (UC) : #10031—

Mechanic

RS-31

BOARD NO. 1-
EVO-9850 (J)
EVO-9850 (UC

13-63

RS-31, LD-1, LM-22, MS-36

Mode Switch

MS-36 BOARD

BOARD NO. 1-641-021-11
EVO-9850 (J) : #10001—
EVO-9850 (UC) : #10031—

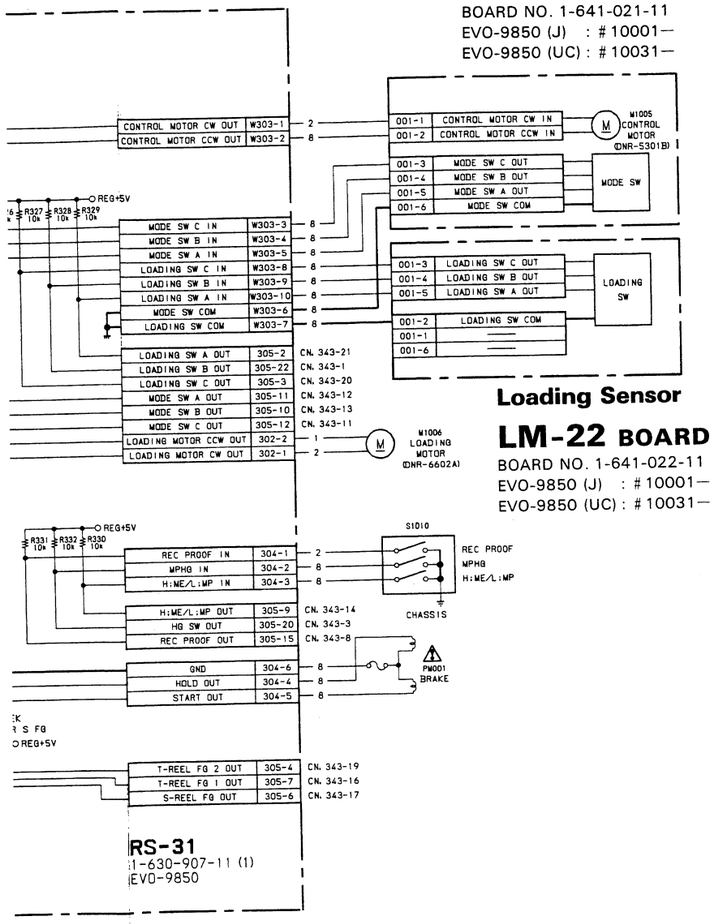

Loading Sensor

LM-22 BOARD

BOARD NO. 1-641-022-11
EVO-9850 (J) : #10001—
EVO-9850 (UC) : #10031—

RS-31

1-630-907-11 (1)
EVO-9850

Mechanical Control

RS-31 BOARD

BOARD NO. 1-630-907-11
EVO-9850 (J) : #10001—
EVO-9850 (UC) : #10031—

13-63

I J K L M N O P

RS-31, LD-1, LM-22, MS-36

RS-31 BOARD
Component Side

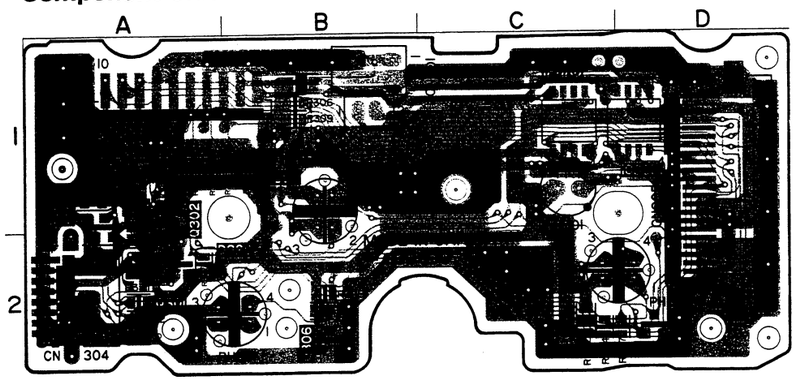

1-630-907-11 COMPONENT SIDE

LD-1 BOARD
Solder Side

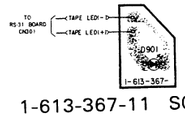

1-613-367-11 SOLDER SIDE

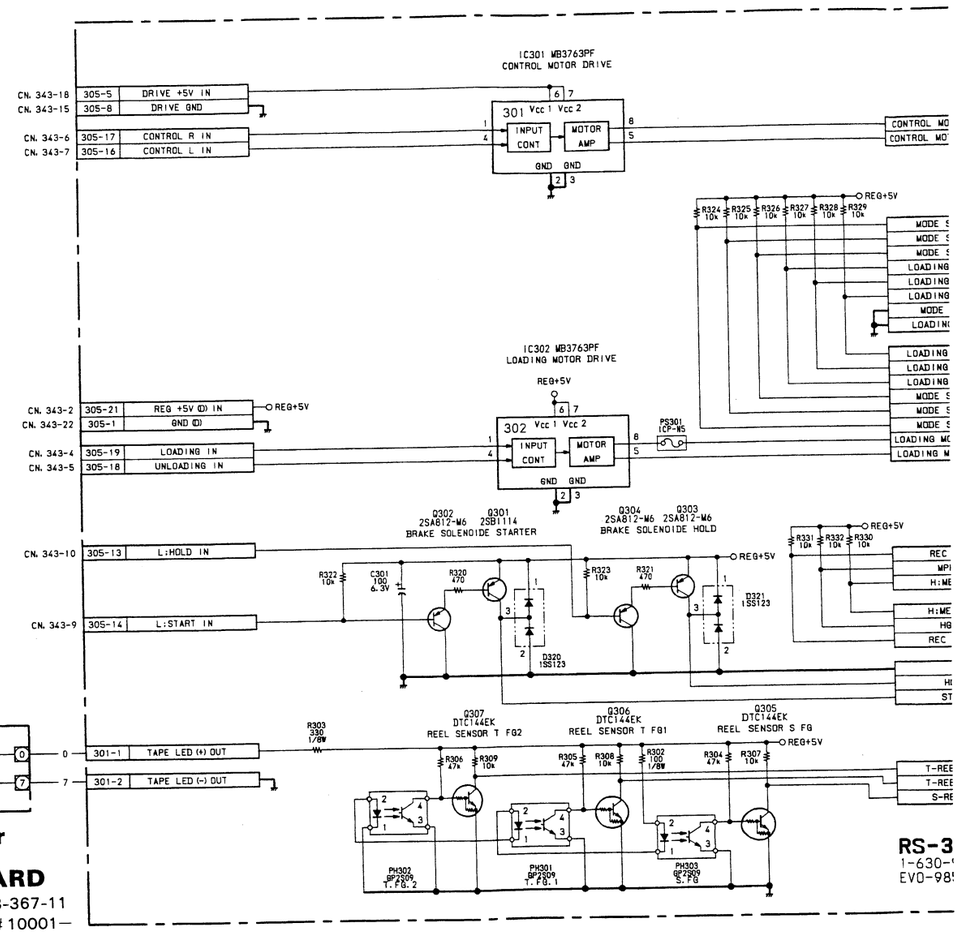

Tape Sensor

LD-1 BOARD

BOARD NO. 1-613-367-11
EVO-9850 (J) : # 10001—
EVO-9850 (UC) : # 10031—

Mechanis

RS-31

BOARD NO. 1-
EVO-9850 (J)
EVO-9850 (UC

13-63

A | B | C | D | E | F | G | H

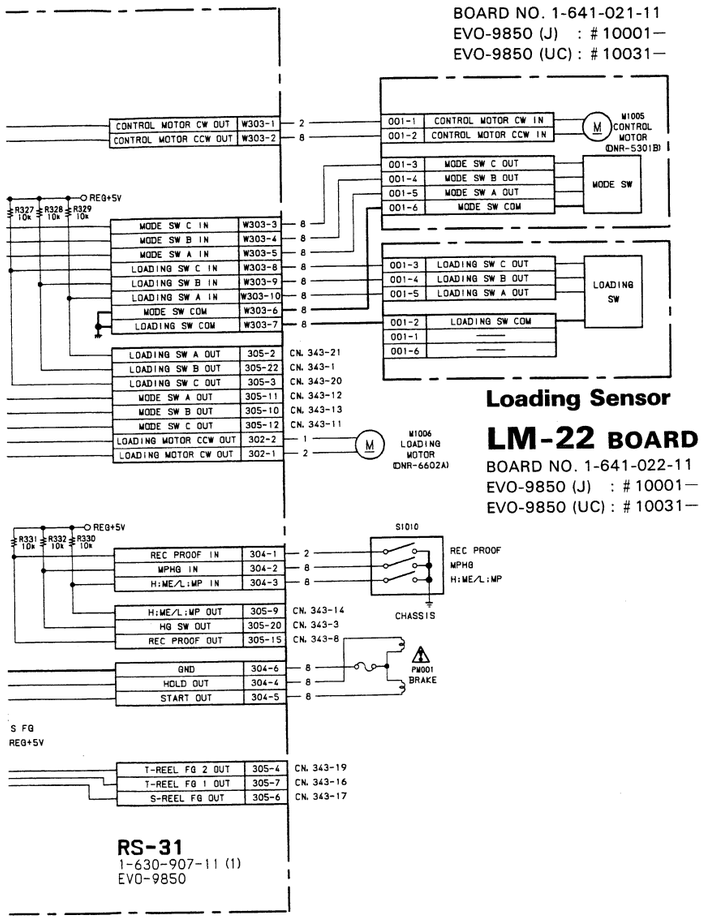

Mode Switch

MS-36 BOARD

BOARD NO. 1-641-021-11
EVO-9850 (J) : # 10001—
EVO-9850 (UC) : # 10031—

Loading Sensor

LM-22 BOARD

BOARD NO. 1-641-022-11
EVO-9850 (J) : # 10001—
EVO-9850 (UC) : # 10031—

RS-31
1-630-907-11 (1)
EVO-9850

Mechanism Control

RS-31 BOARD

BOARD NO. 1-630-907-11
EVO-9850 (J) : # 10001—
EVO-9850 (UC) : # 10031—

KY-217, LP-52, PTC-32

KY-217 (1-642-869-11)

BT1	A-4	Q101	B-3
		Q102	A-8 *
CN701	A-4	Q103	A-8 *
CN702	A-11	Q104	B-5 *
CN703	A-11	Q105	B-5
CN704	A-9	Q106	B-6 *
CN706	A-8	Q107	B-7
		Q108	A-8 *
COP1	A-4	Q109	A-8 *
		Q110	A-7 *
COR1	A-4	Q111	B-8
		Q112	A-7 *
D1	B-2 *	Q113	A-7 *
D9	B-2 *	Q114	B-1 *
D10	A-8 *	Q115	B-1
D11	A-5 *	Q116	A-8 *
D13	A-7 *	Q117	A-8 *
D14	B-10 *	Q118	B-1 *
D15	A-4 *	Q119	B-2
D17	B-6 *	Q120	B-2 *
D19	B-4 *	Q121	B-2
D23	A-10 *	Q122	A-8 *
D24	A-10 *	Q123	A-8 *
D25	A-8 *		
D26	B-1 *	S1	B-2
D29	A-11 *	S9	B-2
D30	B-3 *	S10	B-8
D45	A-6	S11	A-5
D48	A-6 *	S12	A-6
D49	A-4 *	S13	A-7
D50	A-4 *	S14	B-10
D51	A-4 *	S15	A-4
D52	B-10 *	S16	B-5
D54	A-6 *	S17	B-6
D101	A-2	S18	A-7
D102	A-8	S19	B-4
D103	A-5	S23	A-10
D104	A-6	S24	A-10
D105	A-7	S25	A-8
D106	A-1	S26	B-1
D107	A-1	S27	B-1
D108	A-2	S29	A-11
D109	A-5	S30	B-3
D110	A-6		
D111	A-7	TP1	B-5
D112	A-10	TP2	A-6
D113	A-11	TP3	A-6
D114	A-11	TP4	B-4
D115	A-11	TP5	B-6
D116	A-11		
D117	A-9	X1	A-9
D118	A-3	X2	A-9
E1	A-4	* mark; B SIDE mount.	
E2	A-11		
IC1	B-9		
IC4	B-3		
IC6	A-4		
IC7	A-9		
Q2	B-9 *		
Q3	B-9 *		
Q4	B-9 *		
Q5	A-9 *		
Q6	A-6		
Q7	B-9 *		
Q15	A-6 *		
Q100	B-2 *		

Serial No.: (J) 10001—10030
Serial No.: (UC) 10031—10070

KY-217 BOARD
A Side

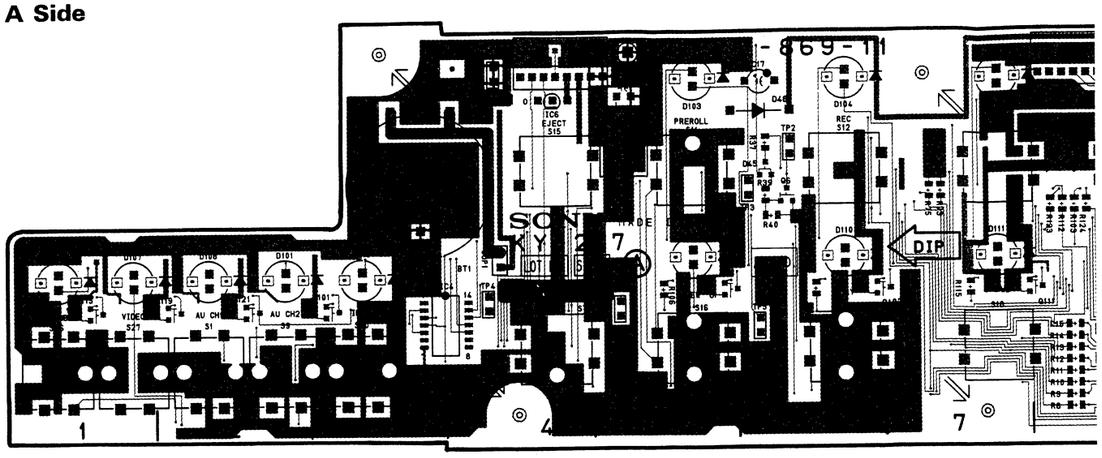

1-642-869-11 A SIDE

A Side is the same as Component Side

KY-217 BOARD
B Side

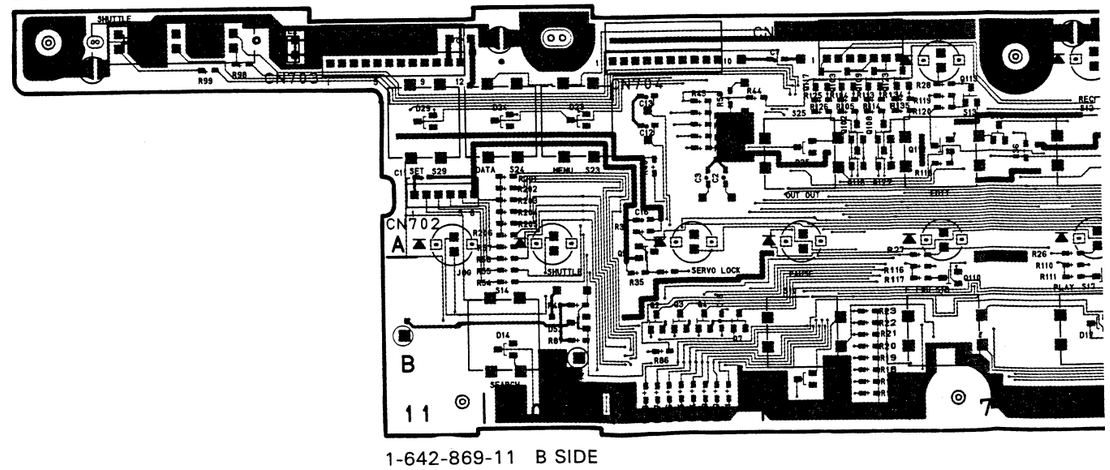

1-642-869-11 B SIDE

B Side is the same as Soldering Side

13-64 (a)

KY-217, LP-52, PTC-32

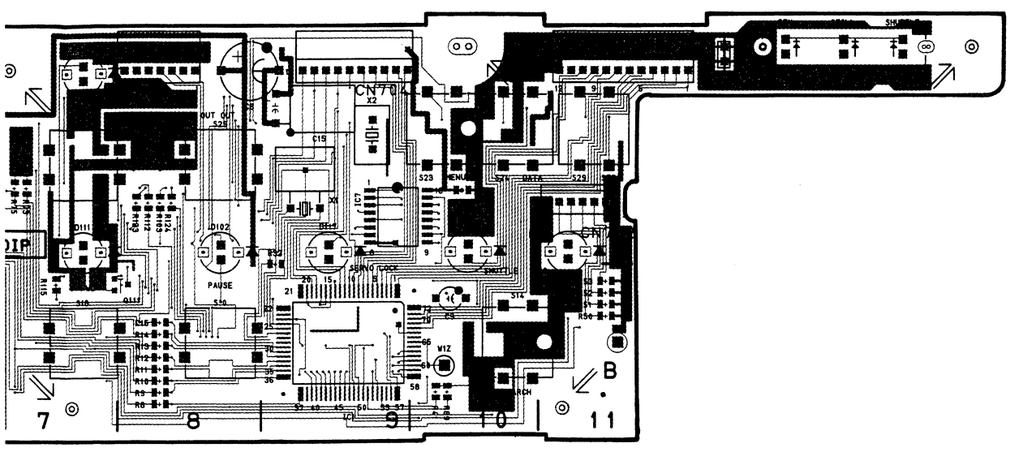

LP-52 BOARD
Component Side

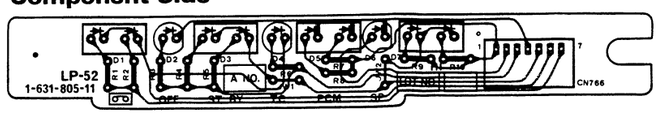

1-631-805-11 COMPONENT SIDE

PTC-32 BOARD
Component Side

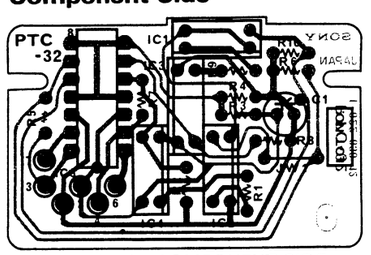

1-622-638-12 COMPONENT SIDE

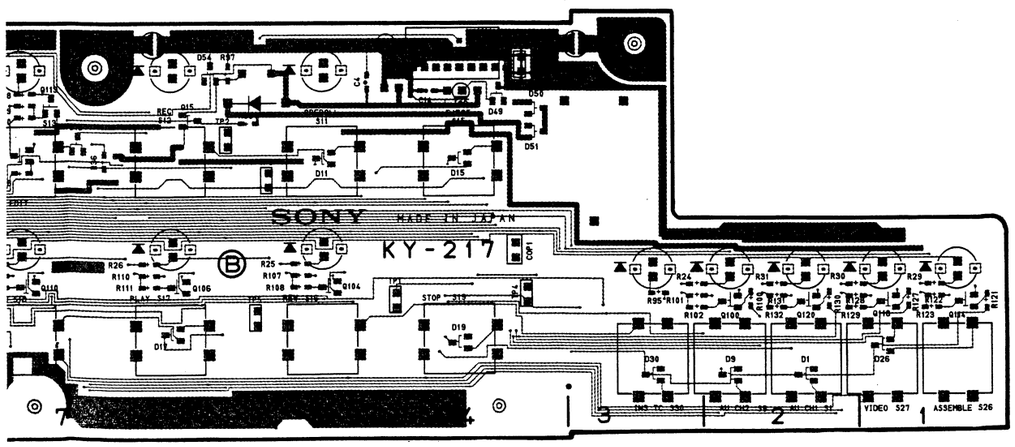

13-64(a)

KY-217, LP-52, PTC-32

KY-217 (1-642-869-12)

BT1	A-4	Q106	B-6 *
		Q107	B-7
CN701	A-4	Q108	A-8 *
CN702	A-11	Q109	A-8 *
CN703	A-11	Q110	B-7 *
CN704	A-9	Q111	B-8
CN706	A-8	Q112	A-7 *
		Q113	A-7 *
COR1	A-4	Q114	B-1 *
		Q115	B-1
D1	B-2 *	Q116	A-8 *
D9	B-2 *	Q117	A-8 *
D10	B-8 *	Q118	B-1 *
D11	A-5 *	Q119	B-2
D13	A-7 *	Q120	B-2 *
D14	B-10 *	Q121	B-2
D15	A-4 *	Q122	A-8 *
D17	B-6 *	Q123	A-8 *
D19	B-4 *		
D23	A-10 *	S1	B-2
D24	A-10 *	S9	B-2
D25	A-8 *	S10	B-8
D26	B-1 *	S11	A-5
D29	A-11 *	S12	A-6
D30	B-3 *	S13	A-7
D45	A-6	S14	B-10
D48	A-6	S15	A-4
D49	A-4 *	S16	B-5
D50	A-4 *	S17	B-6
D51	A-4 *	S18	A-7
D52	B-10 *	S19	B-4
D54	A-6 *	S23	A-10
D101	A-2	S24	A-10
D102	A-8	S25	A-8
D103	A-5	S26	B-1
D104	A-6	S27	B-1
D105	A-7	S29	A-11
D106	A-1	S30	B-3
D107	A-1		
D108	A-2	X1	A-9
D109	A-5	X2	A-9
D110	A-6		
D111	A-7	* mark; B SIDE mount.	
D112	A-10		
D113	A-11		
D114	A-11		
D115	A-11		
D116	A-11		
D117	A-9		
D118	A-3		
IC1	B-9		
IC4	B-3		
IC6	A-4		
IC7	A-9		
Q2	B-9 *		
Q3	B-9 *		
Q4	B-9 *		
Q5	A-9 *		
Q6	A-6		
Q7	B-9 *		
Q15	B-9 *		
Q100	B-2 *		
Q101	B-3		
Q102	A-8 *		
Q103	A-8 *		
Q104	B-5 *		
Q105	B-5		

Serial No.: (J) 10031 and higher
Serial No.: (UC) 10071 and higher

KY-217 BOARD
A Side

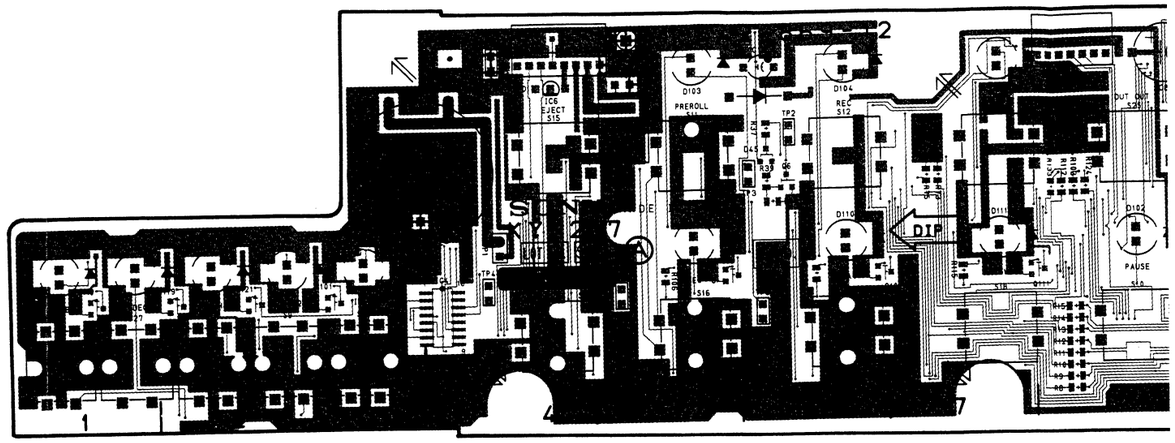

1-642-869-12 A SIDE

A Side is the same as Component Side

KY-217 BOARD
B Side

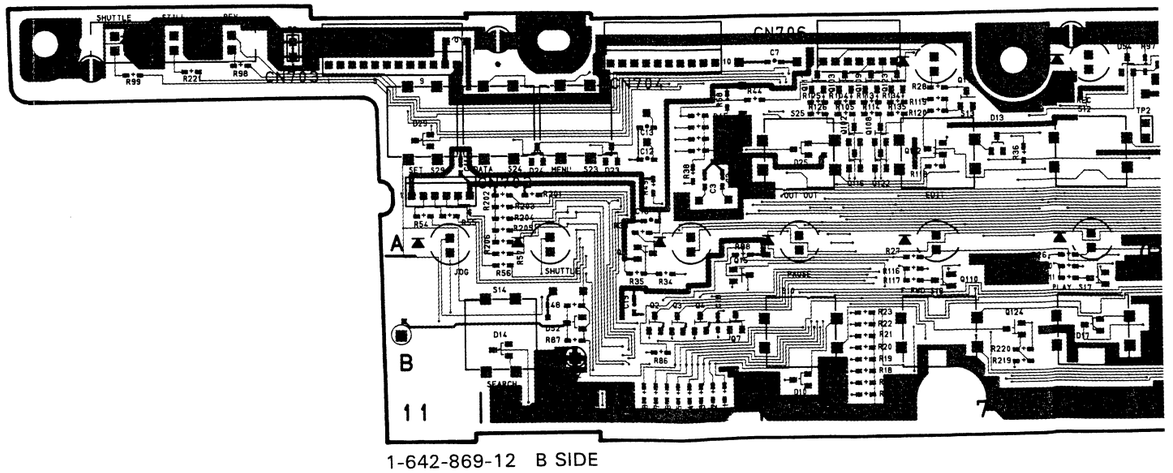

1-642-869-12 B SIDE

B Side is the same as Soldering Side

13-64 (b)

KY-217, LP-52, PTC-32

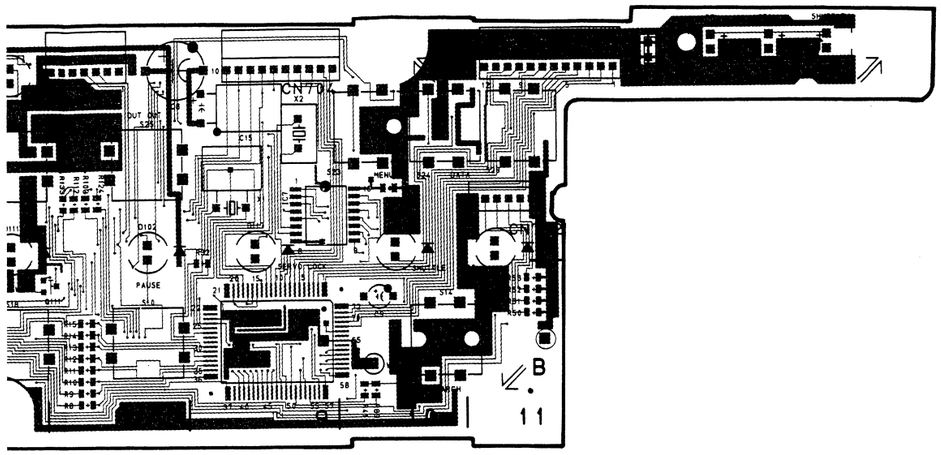

LP-52 BOARD
Component Side

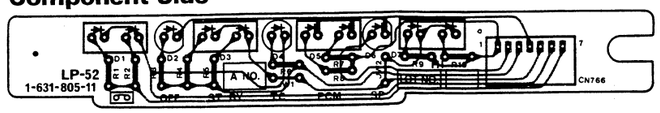

1-631-805-11 COMPONENT SIDE

PTC-32 BOARD
Component Side

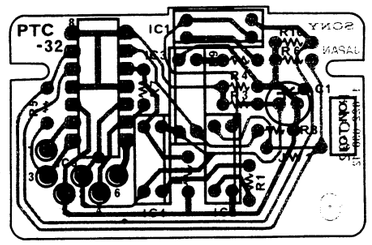

1-622-638-12 COMPONENT SIDE

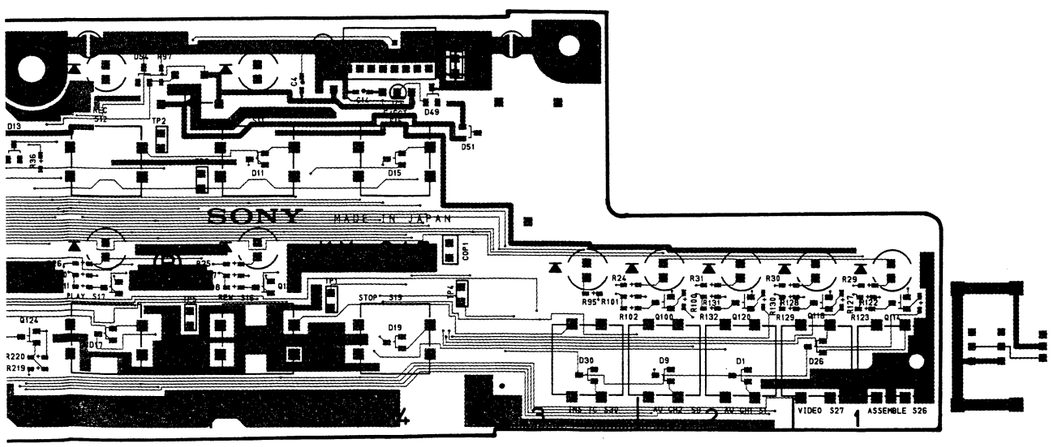

13-64 (b)

Search Dial

PTC-32 BOARD

BOARD NO. 1-622-638-11
EVO-9850 (J) : #10001—
EVO-9850 (UC) : #10031—

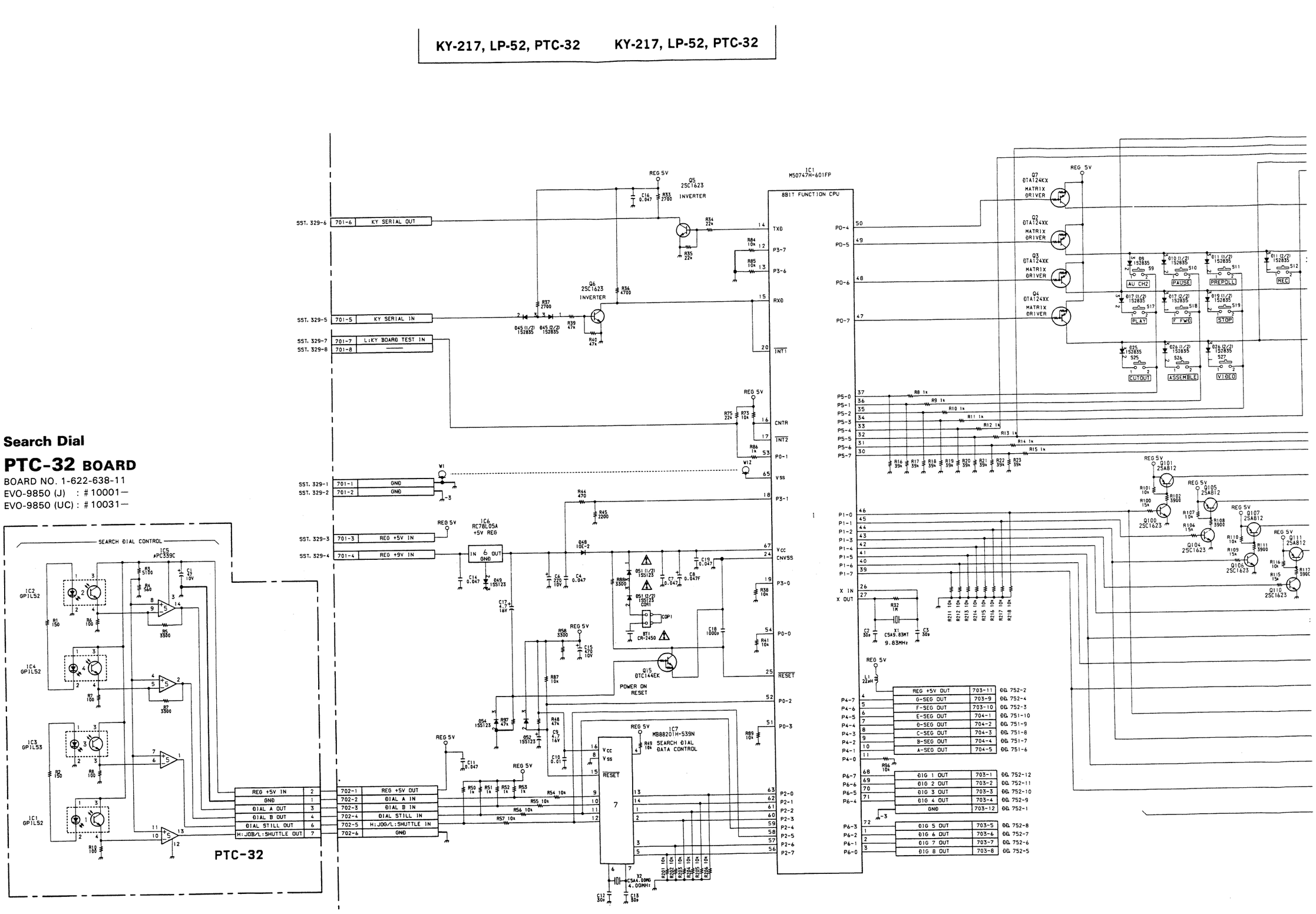

A | B | C | D | E | F | G | H

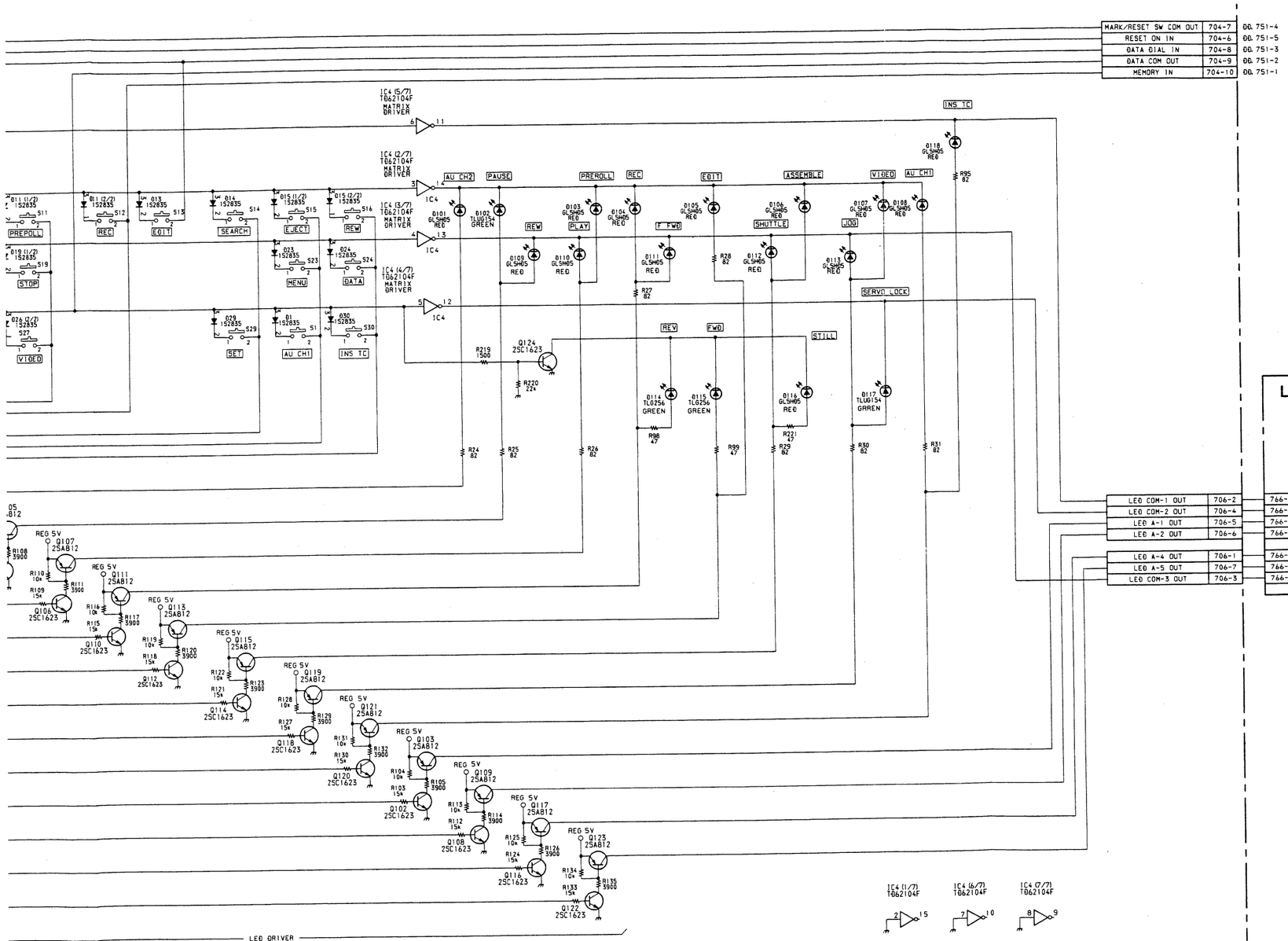

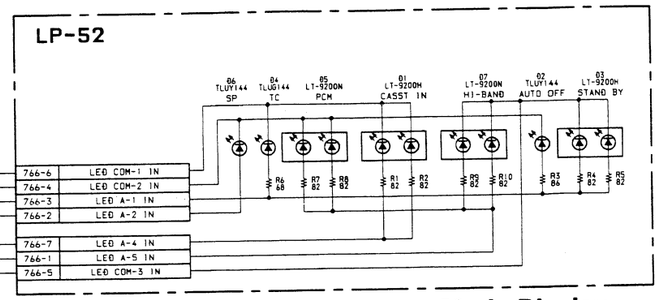

Mode Display

LP-52 BOARD

BOARD NO. 1-631-805-11
EVO-9850 (J) : # 10001—
EVO-9850 (UC) : # 10031—

Function Key Board

KY-217 BOARD

BOARD NO. 1-642-869-11, 12
EVO-9850 (J) : # 10001—
EVO-9850 (UC) : # 10001—

Search Dial

PTC-32 BOARD

BOARD NO. 1-622-638-11
EVO-9850 (J) : # 10001—
EVO-9850 (UC) : # 10031—

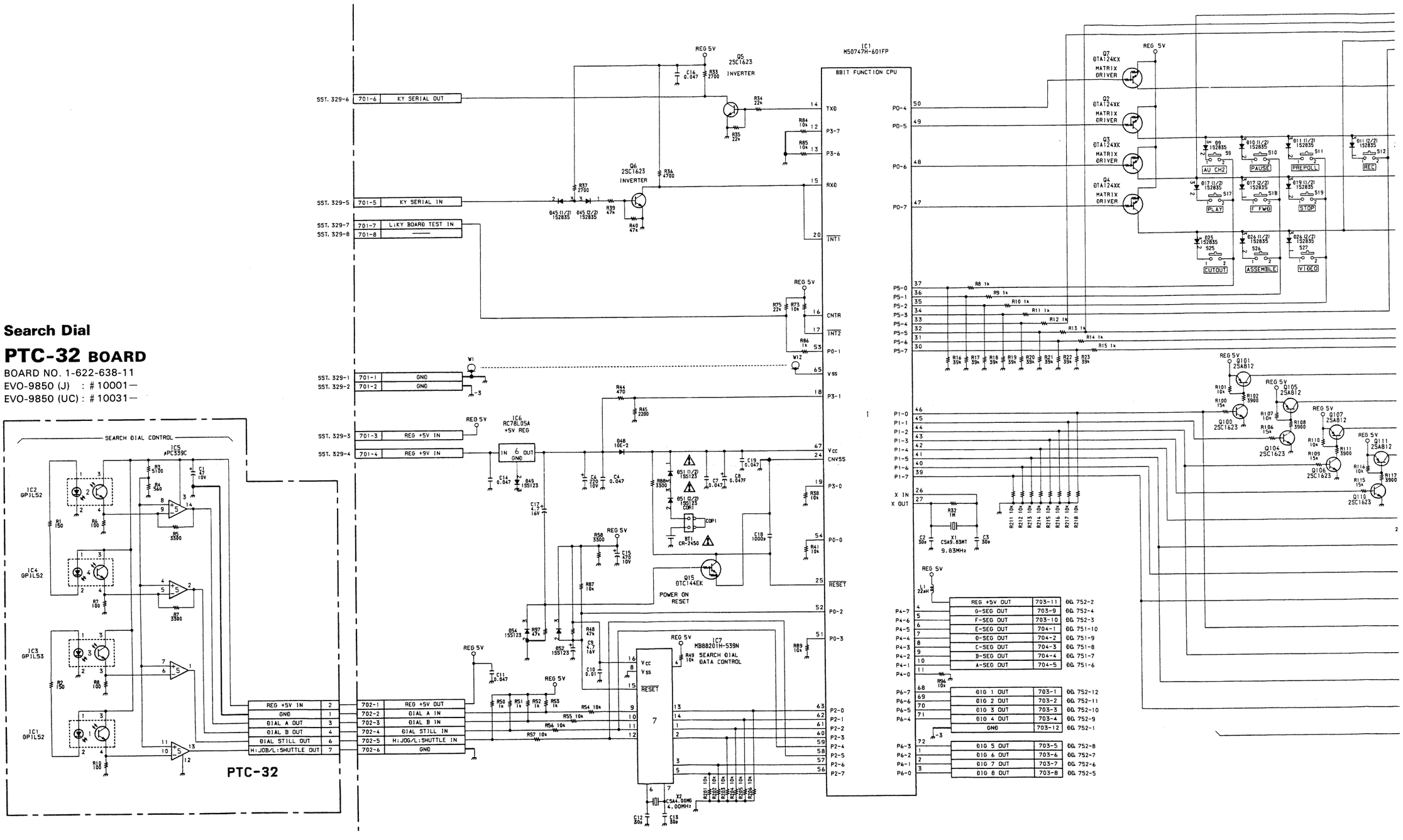

13-65 13-65

A | B | C | D | E | F | G | H

DD-12, DP-101

DD-12 BOARD
Component Side

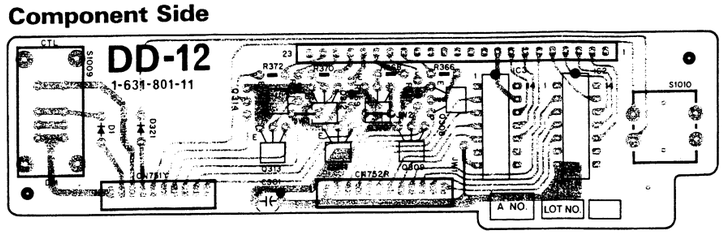

1-631-801-11 COMPONENT SIDE

DP-101 BOARD
Component Side

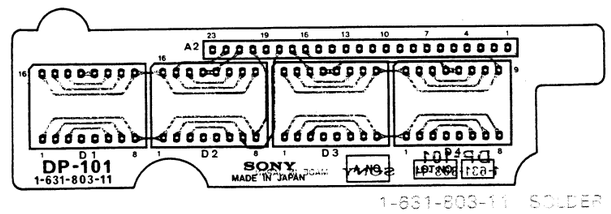

1-631-803-11 SOLDER SIDE

13-66

A B C D E F G H

DD-12, DP-101

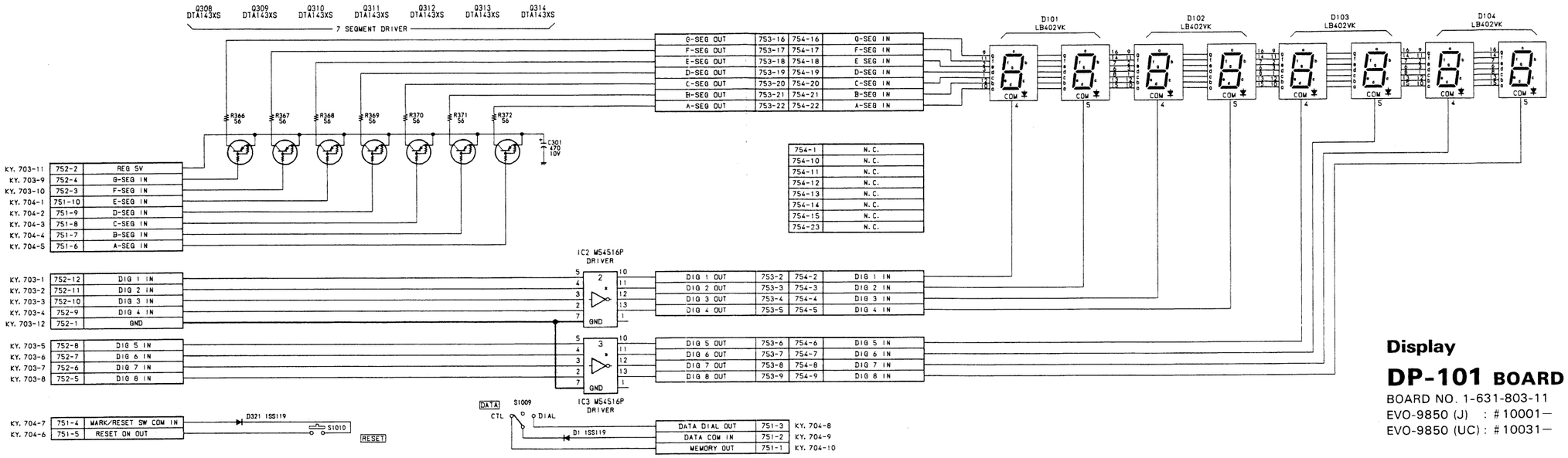

Display

DP-101 BOARD

BOARD NO. 1-631-803-11
EVO-9850 (J) : #10001—
EVO-9850 (UC) : #10031—

Display Drive

DD-12 BOARD

BOARD NO. 1-631-801-11
EVO-9850 (J) : #10001—
EVO-9850 (UC) : #10031—

13-66

I J K L M N O P

SW-467 BOARD
A Side

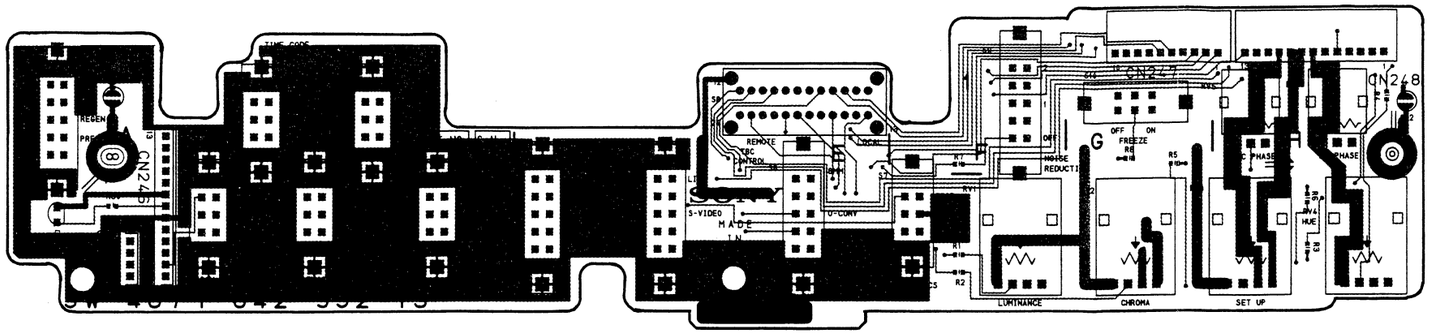

1-642-952-13 A SIDE

A Side is the same as Component Side

SW-467 BOARD
B Side

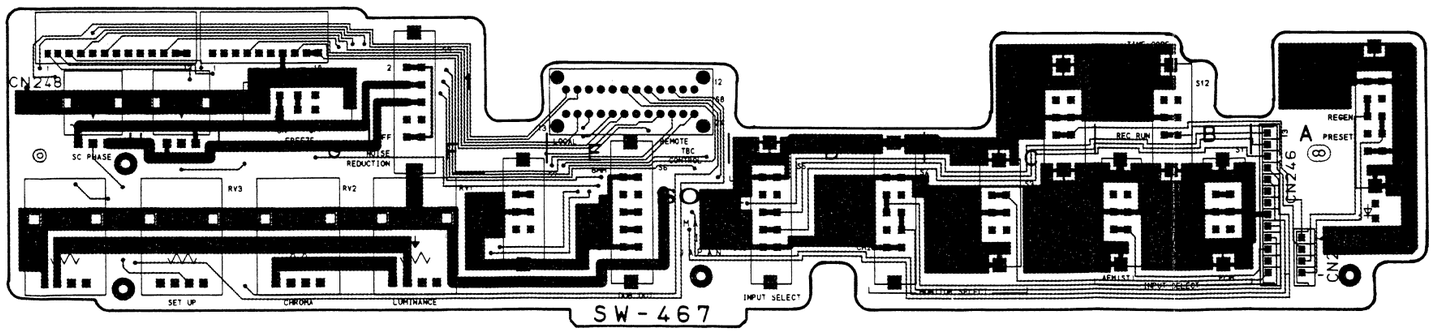

1-642-952-13 B SIDE

B Side is the same as Soldering Side

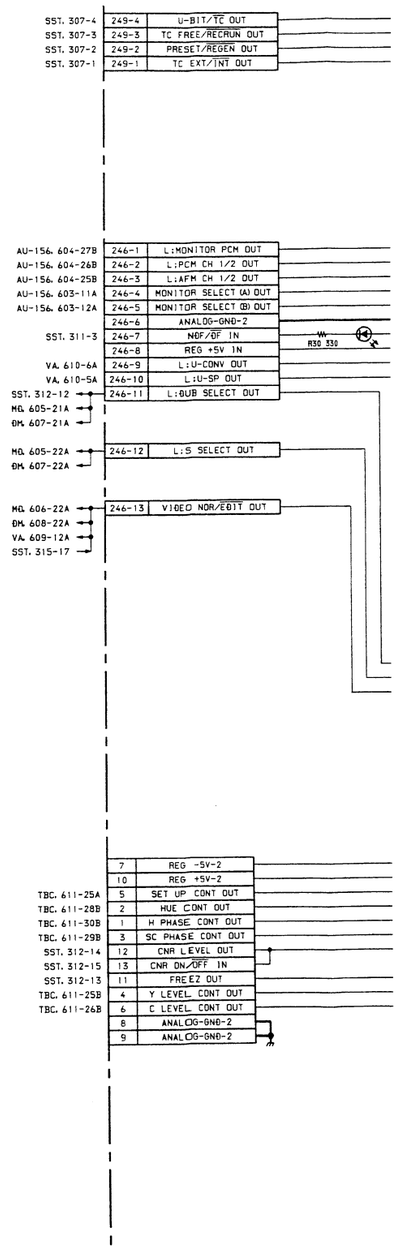

A B C D E F G H

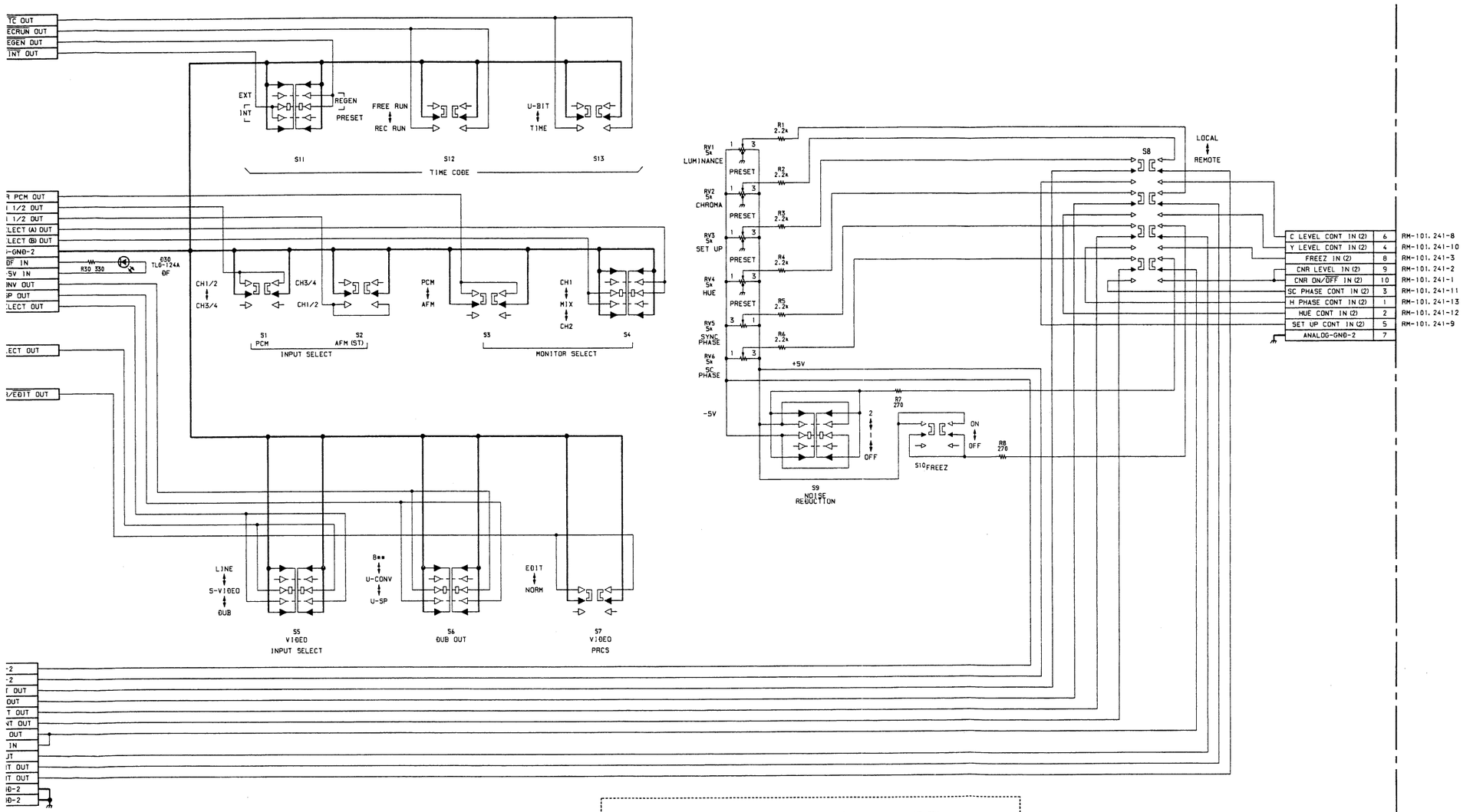

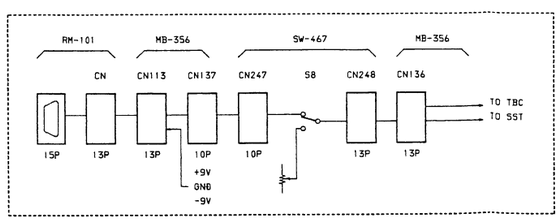

Sub Panel Switch

SW-467 BOARD

BOARD NO. 1-642-952-13
EVO-9850 (J) : #10001—
EVO-9850 (UC) : #10031—

SOPS-1030 BOARD
Component Side

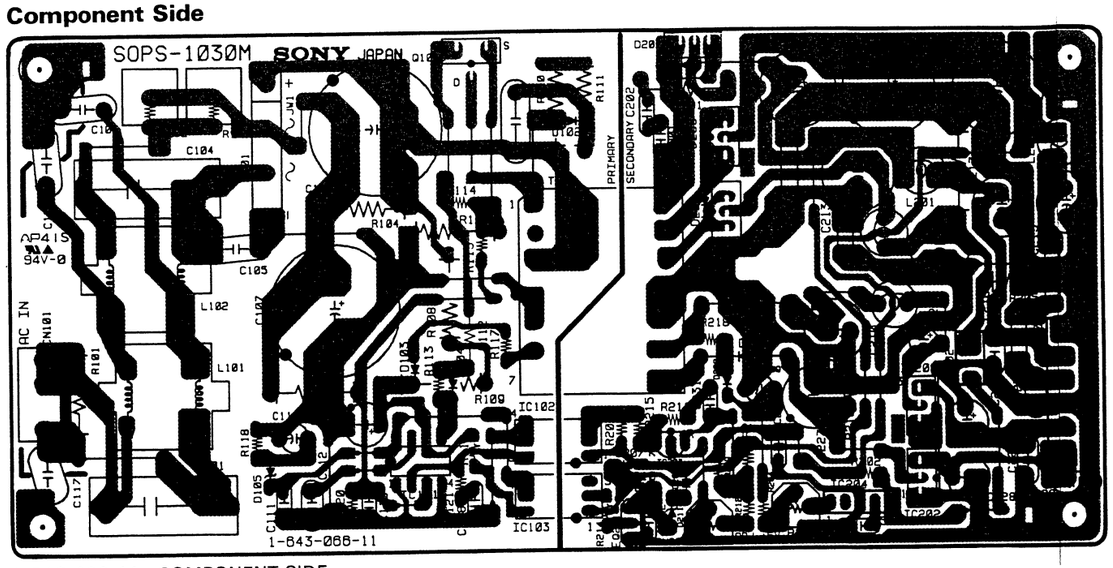

1-643-066-11 COMPONENT SIDE

SOPS-1030 BOARD
Solder Side

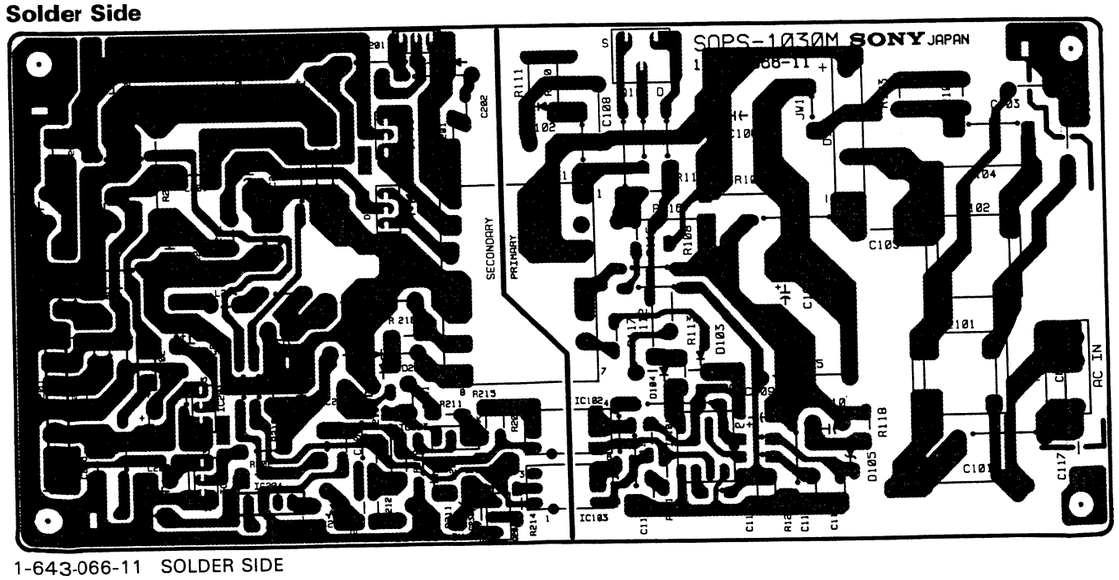

1-643-066-11 SOLDER SIDE

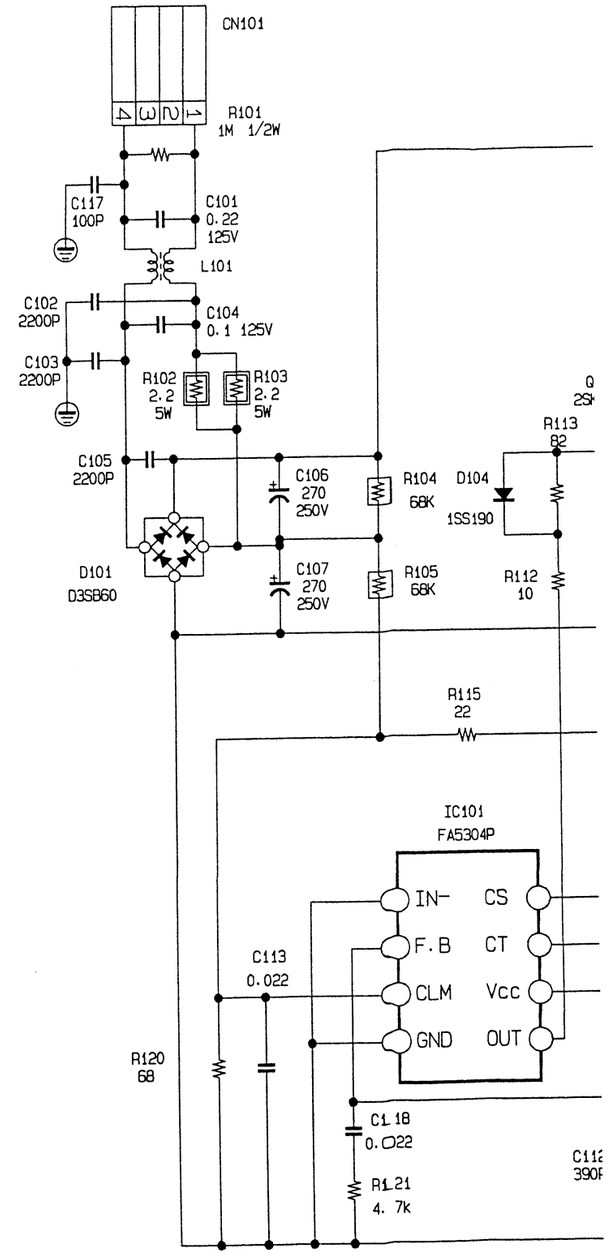

A | B | C | D | E | F | G | H

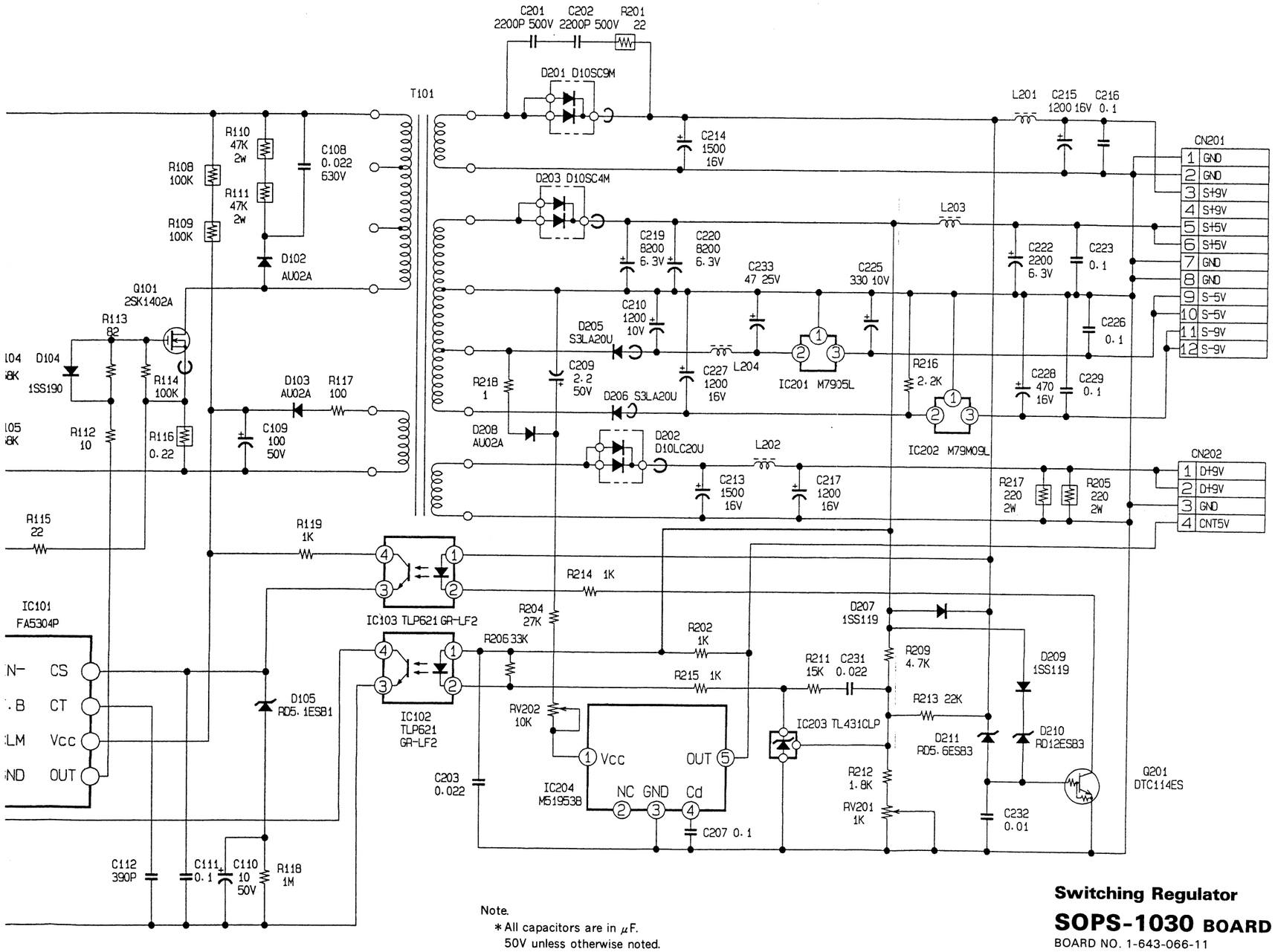

Note.
* All capacitors are in μF.
  50V unless otherwise noted.
* All resistors are in ohms.
  1/4W unless otherwise noted.

Switching Regulator

SOPS-1030 BOARD

BOARD NO. 1-643-066-11
EVO-9850 (J) : #10001—
EVO-9850 (UC) : #10031—

MB-356 (1-642-955-11, 12)

CN113	A-6
CN114	A-6
CN115	A-4
CN117	A-3
CN118	A-2
CN119	E-6
CN121	E-5
CN122	E-3
CN123	E-3
CN124	E-2
CN125	E-1
CN126	C-4
CN127	C-4
CN128	C-3
CN129	A-4
CN130	A-4
CN131	E-6
CN132	D-6
CN133	C-6
CN134	B-6
CN135	A-6
CN136	E-1
CN137	E-4
CN601	B-5
CN602	D-5
CN603	B-4
CN604	D-4
CN605	B-4
CN606	D-3
CN607	B-3
CN608	D-3
CN609	B-2
CN610	D-2
CN611	B-1
CN612	D-1
PS1	A-6
PS2	A-6

MB-356 BOARD
A Side

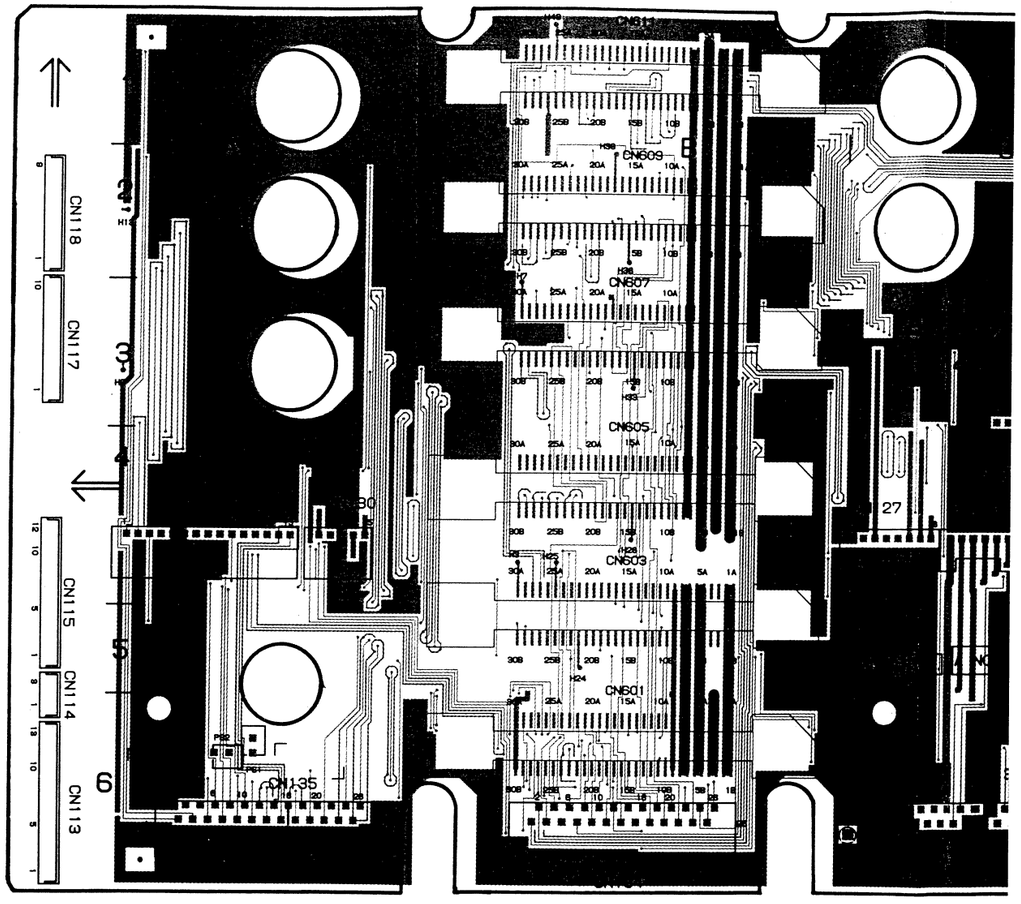

1-642-955-11, 12 A SIDE

A Side is the same as Component Side

356 (1-642-955-11, 12)

13 A-6
14 A-6
15 A-4
17 A-3
18 A-2
19 E-6
21 E-5
22 E-3
23 E-3
24 E-2
25 E-1
26 C-4
27 C-4
28 C-3
29 A-4
30 A-4
31 E-6
32 D-6
33 C-6
34 B-6
35 A-6
36 E-1
37 E-4
)1 B-5
)2 D-5
)3 B-4
)4 D-4
)5 B-4
)6 D-3
)7 B-3
)8 D-3
)9 B-2
0 D-2
1 B-1
2 D-1

A-6
A-6

MB-356 BOARD
A Side

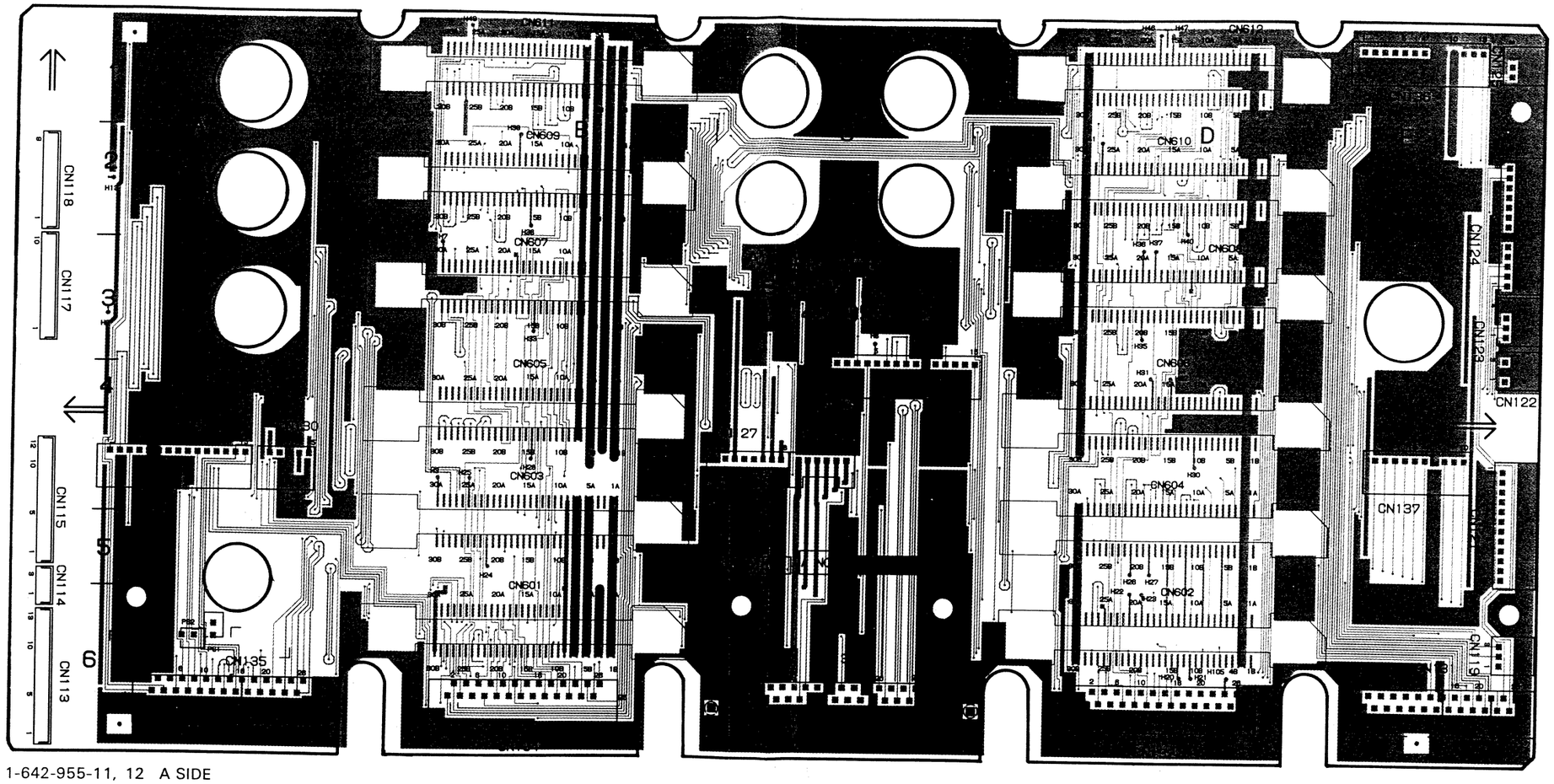

1-642-955-11, 12 A SIDE

A Side is the same as Component Side

MB-356 (1-642-955-11, 12)

CN113	A-6
CN114	A-6
CN115	A-4
CN117	A-3
CN118	A-2
CN119	E-6
CN121	E-5
CN122	E-3
CN123	E-3
CN124	E-2
CN125	E-1
CN126	C-4
CN127	C-4
CN128	C-3
CN129	A-4
CN130	A-4
CN131	E-6
CN132	D-6
CN133	C-6
CN134	B-6
CN135	A-6
CN136	E-1
CN137	E-4
CN601	B-5
CN602	D-5
CN603	B-4
CN604	D-4
CN605	B-4
CN606	D-3
CN607	B-3
CN608	D-3
CN609	B-2
CN610	D-2
CN611	B-1
CN612	D-1
PS1	A-6
PS2	A-6

MB-356 BOARD

A Side

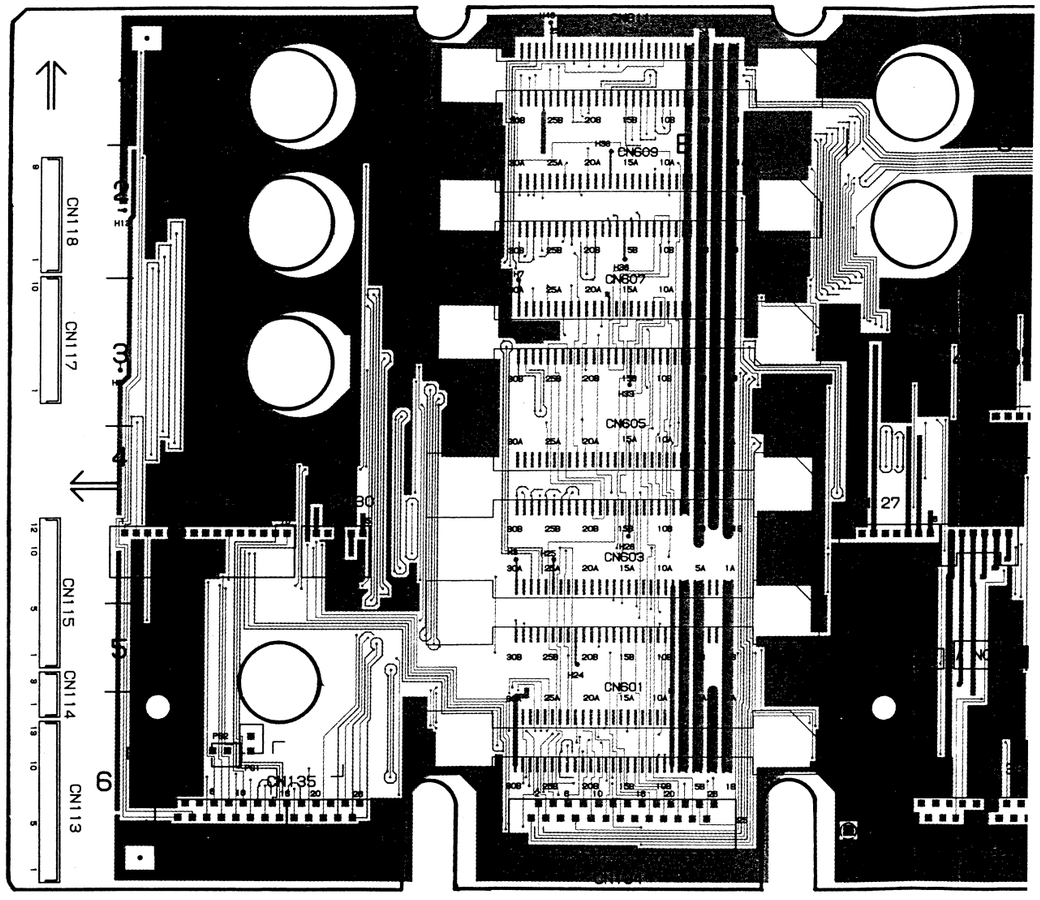

1-642-955-11, 12 A SIDE

A Side is the same as Component Side

356 (1-642-955-11, 12)

113 A-6
114 A-6
115 A-4
117 A-3
118 A-2
119 E-6
121 E-5
122 E-3
123 E-3
124 E-2
125 E-1
126 C-4
127 C-4
128 C-3
129 A-4
130 A-4
131 E-6
132 D-6
133 C-6
134 B-6
135 A-6
136 E-1
137 E-4
501 B-5
502 D-5
503 B-4
504 D-4
505 B-4
506 D-3
507 B-3
508 D-3
509 B-2
510 D-2
511 B-1
512 D-1

A-6
A-6

MB-356 BOARD

A Side

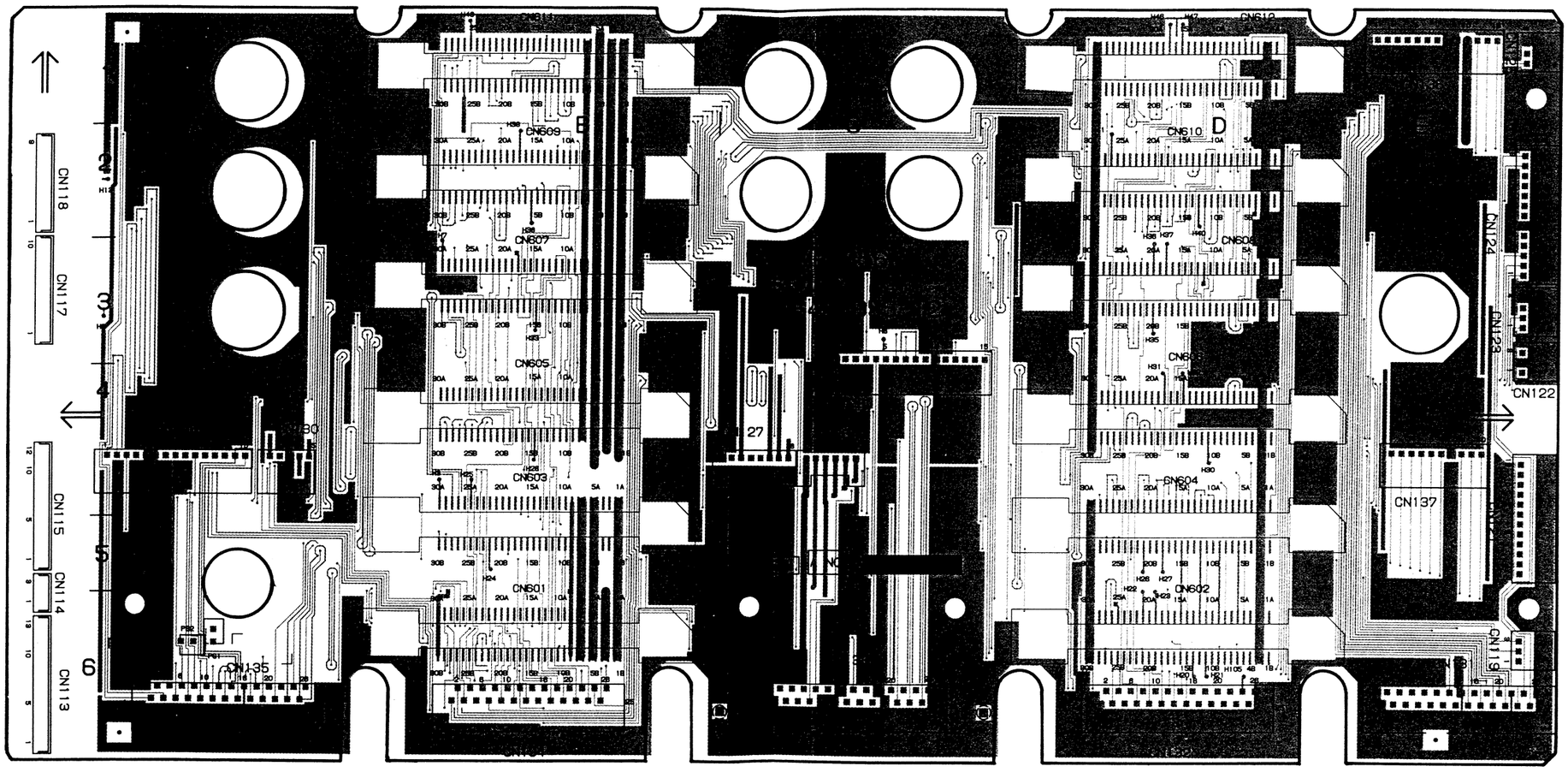

1-642-955-11, 12 A SIDE

A Side is the same as Component Side

MB-356 (1-642-955-11, 12)

CN113	A-6
CN114	A-6
CN115	A-4
CN117	A-3
CN118	A-2
CN119	E-6
CN121	E-5
CN122	E-3
CN123	E-3
CN124	E-2
CN125	E-1
CN126	C-4
CN127	C-4
CN128	C-3
CN129	A-4
CN130	A-4
CN131	E-6
CN132	D-6
CN133	C-6
CN134	B-6
CN135	A-6
CN136	E-1
CN137	E-4
CN601	B-5
CN602	D-5
CN603	B-4
CN604	D-4
CN605	B-4
CN606	D-3
CN607	B-3
CN608	D-3
CN609	B-2
CN610	D-2
CN611	B-1
CN612	D-1
PS1	A-6
PS2	A-6

MB-356 BOARD

B Side

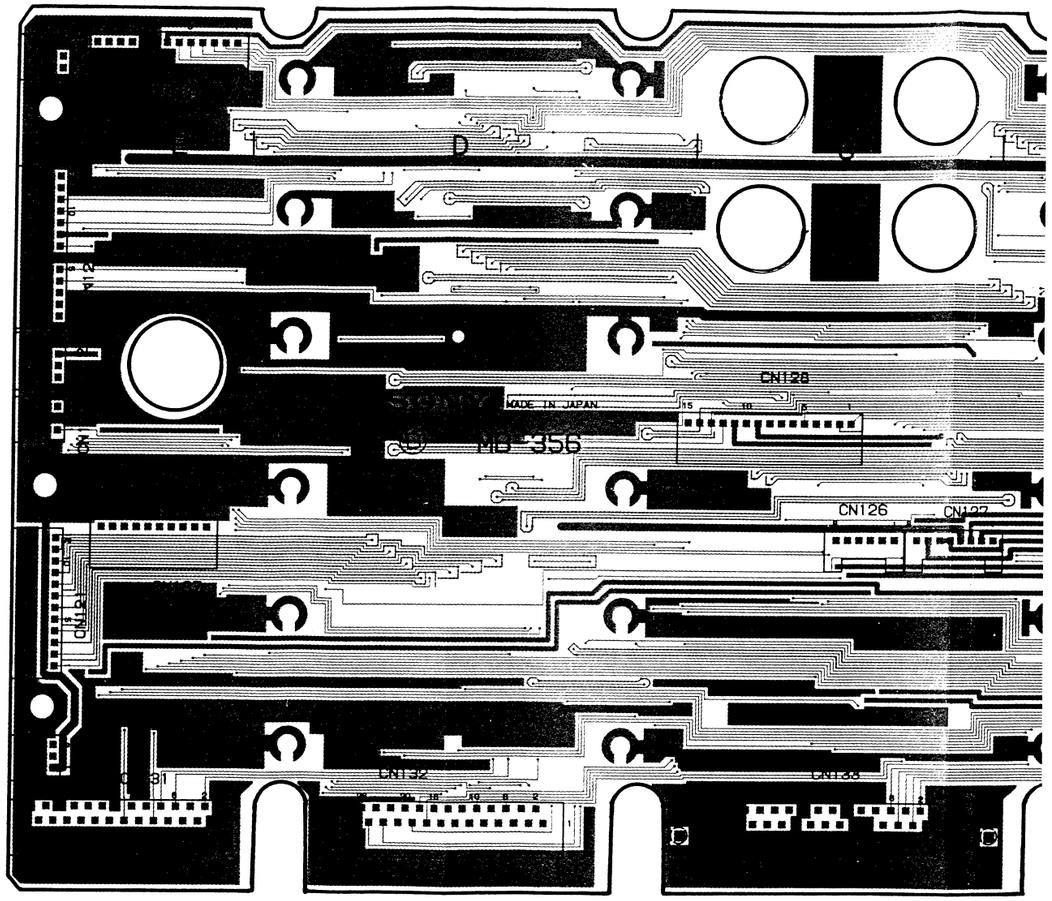

1-642-955-11, 12 B SIDE

B Side is the same as Soldering Side

MB-356 (1-642-955-11, 12)

CN113 A-6
CN114 A-6
CN115 A-4
CN117 A-3
CN118 A-2
CN119 E-6
CN121 E-5
CN122 E-3
CN123 E-3
CN124 E-2
CN125 E-1
CN126 C-4
CN127 C-4
CN128 C-3
CN129 A-4
CN130 A-4
CN131 E-6
CN132 D-6
CN133 C-6
CN134 B-6
CN135 A-6
CN136 E-1
CN137 E-4
CN601 B-5
CN602 D-5
CN603 B-4
CN604 D-4
CN605 B-4
CN606 D-3
CN607 B-3
CN608 D-3
CN609 B-2
CN610 D-2
CN611 B-1
CN612 D-1

PS1 A-6
PS2 A-6

MB-356 BOARD

B Side

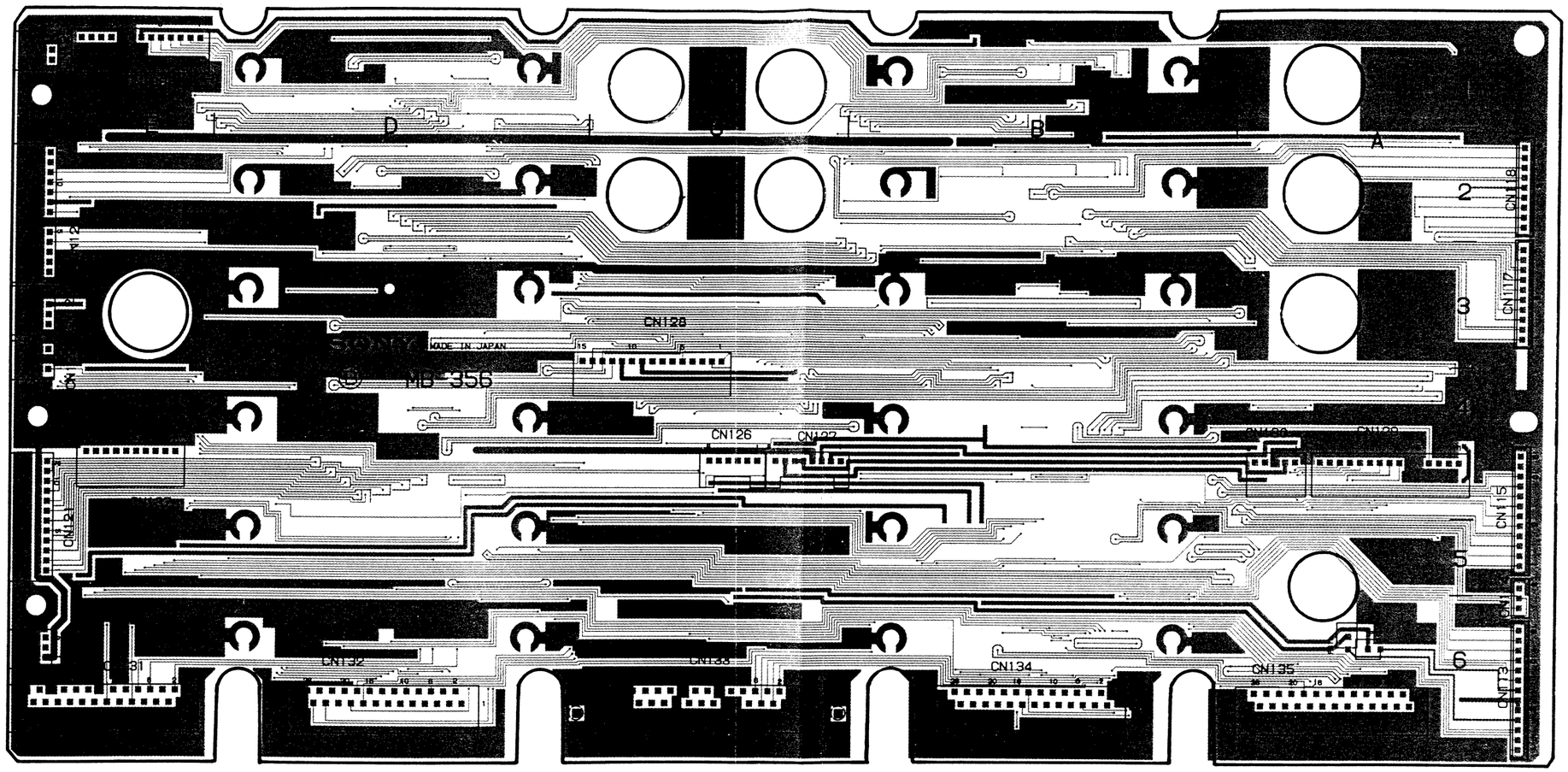

1-642-955-11, 12 B SIDE

B Side is the same as Soldering Side

MB-356 (1-642-955-11, 12)

CN113	A-6
CN114	A-6
CN115	A-4
CN117	A-3
CN118	A-2
CN119	E-6
CN121	E-5
CN122	E-3
CN123	E-3
CN124	E-2
CN125	E-1
CN126	C-4
CN127	C-4
CN128	C-3
CN129	A-4
CN130	A-4
CN131	E-6
CN132	D-6
CN133	C-6
CN134	B-6
CN135	A-6
CN136	E-1
CN137	E-4
CN601	B-5
CN602	D-5
CN603	B-4
CN604	D-4
CN605	B-4
CN606	D-3
CN607	B-3
CN608	D-3
CN609	B-2
CN610	D-2
CN611	B-1
CN612	D-1
PS1	A-6
PS2	A-6

MB-356 BOARD

B Side

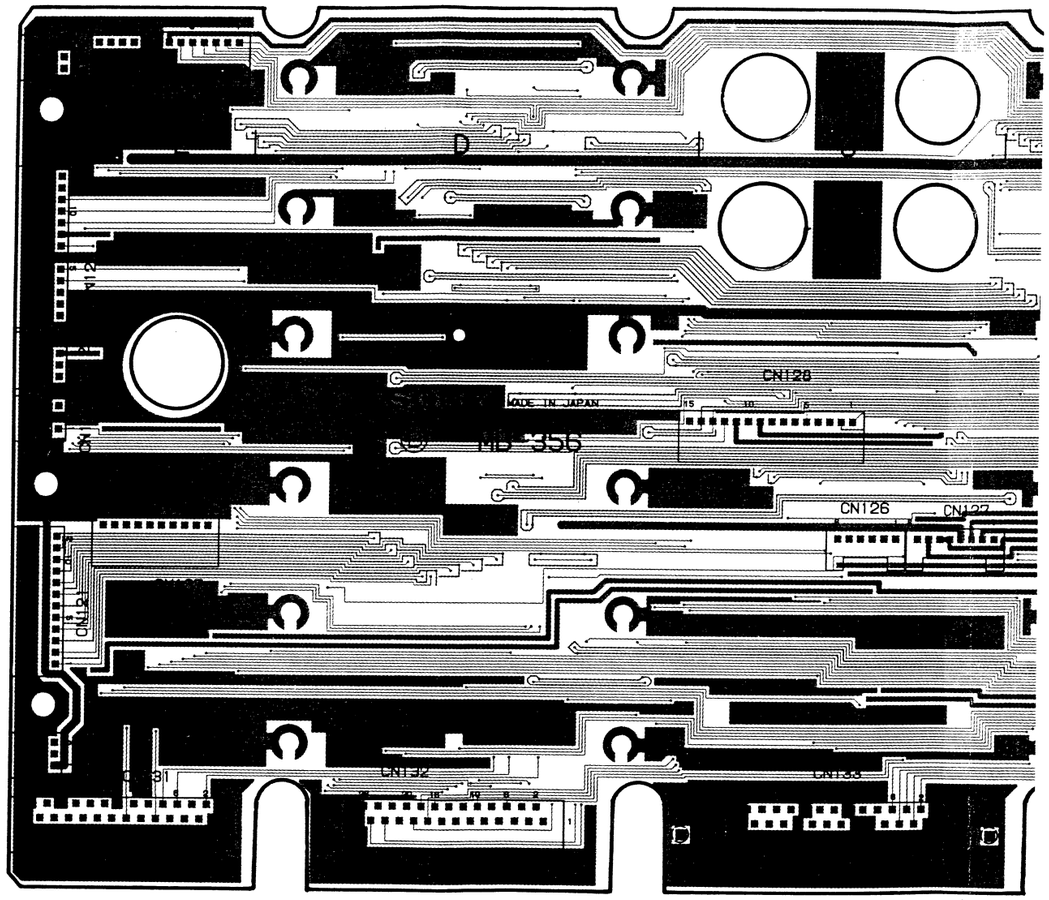

1-642-955-11, 12 B SIDE

B Side is the same as Soldering Side

(1-642-955-11, 12)

A-6
A-6
A-4
A-3
A-2
E-6
E-5
E-3
E-3
E-2
E-1
C-4
C-4
C-3
A-4
A-4
E-6
D-6
C-6
B-6
A-6
E-1
E-4
B-5
D-5
B-4
D-4
B-4
D-3
B-3
D-3
B-2
D-2
B-1
D-1

A-6
A-6

MB-356 BOARD

B Side

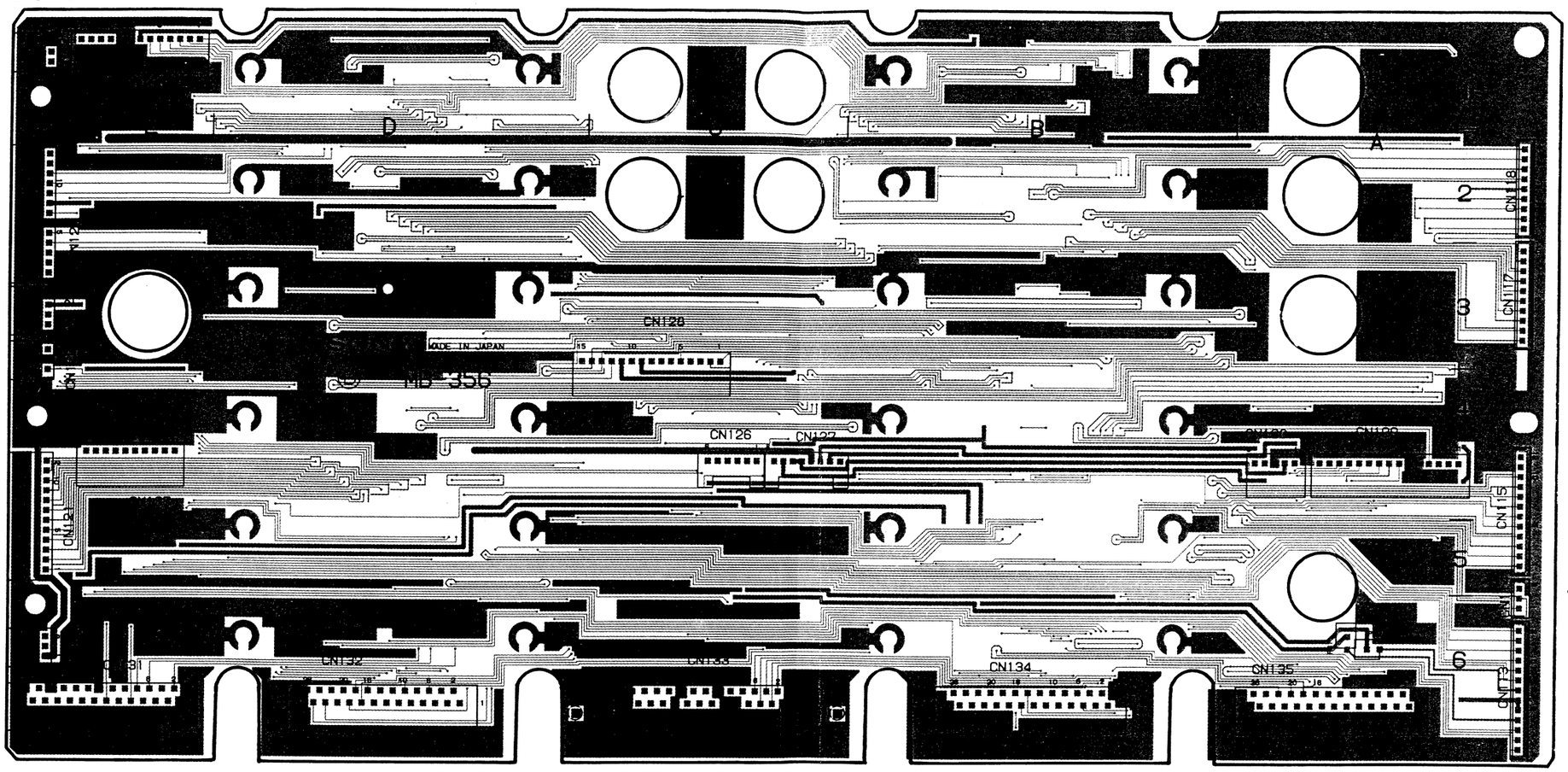

1-642-955-11, 12 B SIDE

B Side is the same as Soldering Side

CN131 (SST-2 CN311)

SST. 311-1	26	ANALOG-GND-1	-2		
SST. 311-2	25	L:REMOTE OUT		125-1	L:REMOTE 1/5
SST. 311-3	24	NDF/$\overline{DF}$ IN		124-7	NDF/$\overline{DF}$ 1/5
SST. 311-4	23	L:TBC INSTAL OUT		612-5A	L:TBC INSTAL 2/5
SST. 311-5	22	ANALOG-GND-1	-2		
SST. 311-6	21	CNR VD OUT (X)		612-20B	CNR VD (X) 2/5
SST. 311-7	20	CNR VD OUT (G)		612-21B	CNR VD (G) 2/5
SST. 311-8	19	CNR SERIAL IN (X)		612-23B	CNR SERIAL (X) 2/5
SST. 311-9	18	N.C			
SST. 311-10	17	CNR CLOCK IN (X)		612-25B	CNR CLOCK (X) 2/5
SST. 311-11	16	N.C			
SST. 311-12	15	L:CNR CS IN		612-27B	L:CNR CS 2/5
SST. 311-13	14	ANALOG-GND-1	-2	605-10A, 607-10A, 129-9	
SST. 311-14	13	H:REC·EE/$\overline{PB}$ IN		604-23B	EE/$\overline{PB}$ 1, 2
SST. 311-15	12	H:FAST TAPE SPEED IN			H:FAST TAPE SPEED 1/5
SST. 311-16	11	N.C			
SST. 311-17	10	N.C			
SST. 311-18	9	1207 ADJ IN		607-28A	1207 ADJ 2/5
SST. 311-19	8	$\overline{EDIT\ CTL}$ IN		602-21B	$\overline{EDIT\ CTL}$ 1/5
SST. 311-20	7	N.C			
SST. 311-21	6	L:FULL ERASE ON IN		602-23B	L:FULL ERASE ON 1/5
SST. 311-22	5	N.C			
SST. 311-23	4	N.C			
SST. 311-24	3	N.C			
SST. 311-25	2	L:RESET IN		602-27B	L:RESET 1/5
SST. 311-26	1	ANALOG-GND-1	-2		

CN132 (SST-2 CN312)

SST. 312-1	26	ANALOG-GND-1	-2		
SST. 312-2	25	AFM REC/$\overline{PB}$ IN		603-11B	AFM REC/PB 1/5
SST. 312-3	24	PINCH ON IN	☆ H105		
SST. 312-4	23	PB SYNC SEL OUT (X)		609-27A	PB SYNC SEL (X) 2/5
SST. 312-5	22	L:TBC INSEL OUT			
SST. 312-6	21	REF VIDEO OUT (X)		117-2, 611-29A	REF VIDEO (X) 2/5
SST. 312-7	20	REF VIDEO OUT (G)		117-1, 611-28A	REF VIDEO (G) 2/5
SST. 312-8	19	H:TBC BYPASS ON/$\overline{OFF}$ IN		609-10A, 611-11A	H:TBC BYPASS 2/5
SST. 312-9	18	L:CHARACTER ON IN		609-28A	L:CHARACTER ON 2/5
SST. 312-10	17	CHARACTER SIG IN		609-29A	CHARACTER SIG 2/5
SST. 312-11	16	CHARACTER BACK IN		609-30A	CHARACTER BACK 2/5
SST. 312-12	15	L:DUB SELECT OUT		124-11, 605-21A, 607-21A	L:DUB SELECT 2/5
SST. 312-13	14	FREEZ OUT		136-11	FREEZ 1/5
SST. 312-14	13	CNR LEVEL OUT		136-12	CNR LEVEL 1/5
SST. 312-15	12	CNR ON/$\overline{OFF}$ IN		136-13	CNR ON/$\overline{OFF}$ 1/5
SST. 312-16	11	H:E/$\overline{C}$ IN		606-27A, 608-27A, 609-22A, 128-3	H:E/$\overline{C}$ 1, 2
SST. 312-17	10	L:VIDEO MUTE IN		605-9A, 607-9A, 609-24A	L:VIDEO MUTE 2/5
SST. 312-18	9	H:SP/$\overline{LP}$ IN		606-26A, 608-26A	H:SP/$\overline{LP}$ 2/5
SST. 312-19	8	H:JOG IN		608-13A	JOG 2/5
SST. 312-20	7	H:ME/$\overline{MP}$ IN		606-25A, 608-25A, 128-12, 129-4	H:ME/$\overline{MP}$ 1/5
SST. 312-21	6	H:AFM MUTE IN		603-19B	H:AFM MUTE 1/5
SST. 312-22	5				
SST. 312-23	4	H:PCM1 AFR PB/$\overline{EE}$ IN		602-18B	PCM1 AFR PB/$\overline{EE}$ 1/5
SST. 312-24	3	H:PCM2 AFR PB/$\overline{EE}$ IN		602-19B	PCM2 AFR PB/$\overline{EE}$ 1/5
SST. 312-25	2	L:NOR PCM OUT			
SST. 312-26	1	ANALOG-GND-1	-2		

CN133 (SST-2 CN313)

SST. 313-1	26	ANALOG-GND-1	-2		
SST. 313-2	25	CK IN (X)		605-9B, 607-9B	CK (X) 2/5
SST. 313-3	24	N.C			
SST. 313-4	23	SI IN (X)		605-11B, 607-11B	SI (X) 2/5
SST. 313-5	22	N.C			
SST. 313-6	21	PB CS IN		607-13B	PB CS 2/5
SST. 313-7	20	REC CS IN		605-14B	REC CS 2/5
SST. 313-8	19	ANALOG-GND-1	-2		
SST. 313-9	18	ANALOG-GND-1			
SST. 313-10	17				
SST. 313-11	16				
SST. 313-12	15				
SST. 313-13	14	RF OK IN		607-24A	RF OK 2/5
SST. 313-14	13				
SST. 313-15	12	ANALOG-GND-1	-2		
SST. 313-16	11	ANALOG-GND-1			
SST. 313-17	10				
SST. 313-18	9	ANALOG-GND-1	-2		
SST. 313-19	8	RF DET PULSE OUT		604-28A	RF DET PULSE 1/5
SST. 313-20	7	H PCM WHITE IN		602-17A	H PCM WHITE 1/5
SST. 313-21	6	L:SCK OUT		601-29B	L:SCK 1/5
SST. 313-22	5	MSI OUT		601-28B	MSI 1/5
SST. 313-23	4	MSO IN		601-27B	MSO 1/5
SST. 313-24	3	L:PCC CS IN		601-26B	L:PCC CS 1/5
SST. 313-25	2	L:10M CS IN		601-25B	L:10M CS 1/5
SST. 313-26	1	ANALOG-GND-1	-2		

CN134 (SST-2 CN314)

SST. 314-1	26	RF CONTROL SW PULSE IN		601-17B	RF CONTROL SW 1/5
SST. 314-2	25	M RF SW PULSE IN		601-18B	M RF SW PULSE 1/5
SST. 314-3	24	REC SWP IN		129-3	REC SWP 1/5
SST. 314-4	23	JOG VD IN		607-19A	JOG VD 2/5
SST. 314-5	22	PB PCM SWP IN		601-15B, 128-4	PB PCM SWP 1/5
SST. 314-6	21	PB VIDEO SWP IN		128-6	PB VIDEO SWP 1/5
SST. 314-7	20	AFM SWP IN		603-14B	AFM SWP (X) 1/5
SST. 314-8	19	PB SREF PULSE IN		601-14B	PB SREF PULSE 1/5
SST. 314-9	18	V BLK PULSE IN		603-16B	V BLK PULSE (X) 1/5
SST. 314-10	17	SREF PULSE IN		601-16B	SREF.P 1/5
SST. 314-11	16	F ERASE CONT OUT		128-15, 129-10	F ERASE CONT 1/5
SST. 314-12	15	PCM REC CONT OUT		129-11	PCM REC CONT 1/5
SST. 314-13	14	REC CONT IN		129-12	REC CONT 1/5
SST. 314-14	13	REC SYNC OUT (X)		605-17B	REC SYNC (X) 2/5
SST. 314-15	12	H:LESS THANX1.0 IN		612-15B	H:LESS THANX1.0 2/5
SST. 314-16	11	L:J-AUDIO CS IN		601-20A	L:J-AUDIO CS 1/5
SST. 314-17	10	J-AUDIO SERIAL IN		601-22A	J-AUDIO SERIAL 1/5
SST. 314-18	9	J-AUDIO CLOCK IN		601-21A	J-AUDIO CLOCK 1/5
SST. 314-19	8	H:PCM MUTE IN		602-15B	H:PCM MUTE 1/5
SST. 314-20	7	DUB SWP IN (X)		610-8A	DUB SWP (X) 2/5
SST. 314-21	6	CAP FG IN		601-19A	CAP FG 1/5
SST. 314-22	5	REC AB IN		129-13	REC AB 1/5
SST. 314-23	4	H:PCM PB/REC IN		601-15A	H:PCM PB/REC 1/5
SST. 314-24	3	H:PCM AFREC IN		601-14A	H:PCM AFREC 1/5
SST. 314-25	2	PB 135° BURST PULSE OUT (X)		608-7B	PB BURST PULSE (X) 2/5
SST. 314-26	1	REF BURST PULSE OUT (X)		606-7A	REF BURST PULSE (X) 2/5

CN135 (SST-2 CN315)

SST. 315-1	26	PB RF3 OUT (X)		128-5	PB RF3 (X) 1/5
SST. 315-2	25	PB RF3 OUT (G)		H6	PB RF3 (G) 1/5
SST. 315-3	24	PB PCM OUT (X)		602-26A, 128-13	PB PCM (X) 1/5
SST. 315-4	23	PB PCM OUT (G)		602-27A, 128-14	PB PCM (G) 1/5
SST. 315-5	22	PB SYNC DM OUT (X)		601-23A, 607-11A	PB SYNC DM (X) 1, 2
SST. 315-6	21	M0 REC SWP IN (X)		605-15A	M0 REC SWP (X) 2/5
SST. 315-7	20	PCM RF AREA OUT		601-29A	PCM RF AREA 1/5
SST. 315-8	19	H:PCM PB/EE IN		602-6B	H:PCM PB/EE 1/5
SST. 315-9	18	REC PCM CARRIER OUT (G)		601-11B	REC PCM CARRIER (G) 1/5
SST. 315-10	17	REC PCM CARRIER OUT (X)		601-10B	REC PCM CARRIER (X) 1/5
SST. 315-11	16	ANALOG-GND-1	-2		
SST. 315-12	15	REC PCM RF IN (X)		129-15	REC PCM RF (X) 1/5
SST. 315-13	14	REC PCM RF IN (G)		129-14	REC PCM RF (G) 1/5
SST. 315-14	13	REC ATF IN (X)		606-27B	REC ATF (X) 2/5
SST. 315-15	12	REC ATF IN (G)		606-28B	REC ATF (G) 2/5
SST. 315-16	11	PCM AREA IN		601-21B	PCM AREA 1/5
SST. 315-17	10	H:VIDEO NOR/$\overline{EDIT}$ IN		606-22A, 608-22A, 609-12A, 124-13	VIDEO NOR/$\overline{EDIT}$ 1, 2
SST. 315-18	9	TAPE DIRECTION F/$\overline{R}$ IN		601-18A	TAPE DIRECTION 1/5
SST. 315-19	8	DUB FRAMING PULSE OUT		115-6	Ø FRAMING P IN 2/5
SST. 315-20	7	H:E DET OUT		607-21B	H:E DET 2/5
SST. 315-21	6	PB/EE SWP IN (X)		607-26A, 612-6A	PB/EE SWP (X) 2/5
SST. 315-22	5	H:PCM REC MUTE IN		602-9B	PCM REC MUTE 1/5
SST. 315-23	4	AUTO/$\overline{EXT}$ OUT			
SST. 315-24	3	FIELD 60C INH IN		612-25A	FIELD 60C INH 2/5
SST. 315-25	2	REG +5V-1		126-4	5V
SST. 315-26	1	REF SYNC OUT		611-14A	REF SYNC 2/5

CN136

SW-467. 248-1	1	H PHASE CONT OUT		611-30B	H PHASE CONT 2/5
SW-467. 248-2	2	HUE CONT OUT		611-28B	HUE CONT 2/5
SW-467. 248-3	3	SC PHASE CONT OUT		611-29B	SC PHASE CONT 2/5
SW-467. 248-4	4	Y LEVEL CONT OUT		611-25B	Y LEVEL CONT 2/5
SW-467. 248-5	5	SET UP CONT OUT		611-25A	SET UP CONT 2/5
SW-467. 248-6	6	C LEVEL CONT OUT		611-26B	C LEVEL CONT 2/5
SW-467. 248-7	7	REG -5V-2			-5V-2
SW-467. 248-8	8	ANALOG-GND-2	-2		
SW-467. 248-9	9	ANALOG-GND-2			
SW-467. 248-10	10	REG +5V-2			5V-2
SW-467. 248-11	11	FREEZ IN		132-14	FREEZ 1/5
SW-467. 248-12	12	CNR LEVEL OUT		132-13	CNR LEVEL 1/5
SW-467. 248-13	13	CNR ON/$\overline{OFF}$		132-12	CNR ON/$\overline{OFF}$ 1/5

CN137

SW-467. 247-1	1	H PHASE CONT OUT (2)		113-13	H PHASE CONT (2) 2/5
SW-467. 247-2	2	HUE CONT OUT (2)		113-12	HUE CONT (2) 2/5
SW-467. 247-3	3	SC PHASE CONT OUT (2)		113-11	SC PHASE CONT (2) 2/5
SW-467. 247-4	4	Y LEVEL CONT OUT (2)		113-10	Y LEVEL CONT (2) 2/5
SW-467. 247-5	5	SET UP CONT OUT (2)		113-9	SET UP CONT (2) 2/5
SW-467. 247-6	6	C LEVEL CONT OUT (2)		113-8	C LEVEL CONT (2) 2/5
SW-467. 247-7	7	ANALOG-GND-2			
SW-467. 247-8	8	FREEZ OUT (2)		113-3	FREEZ (2) 2/5
SW-467. 247-9	9	CNR LEVEL OUT (2)		113-2	CNR LEVEL (2) 2/5
SW-467. 247-10	10	CNR ON/$\overline{OFF}$ OUT (2)		113-1	CNR ON/$\overline{OFF}$ (2) 2/5

CN601 (AU-157)

		B		A		
		Ø1G1-GND	30	Ø1G1-GND		
1/5	L:SCK	L:SCK OUT	29	PCM RF AREA OUT	135-20	PCM
1/5	MSI	MSI OUT	28			
1/5	MSO	MSO IN	27			
1/5	L:PCC CS	L:PCC CS IN	26			
1/5	L:10M CS	L:10M CS IN	25			
1/5	RAMP OUT (G)	RAMP OUT (G)	24	PB SYNC DM IN (G)	607-12A	PB SY
1/5	RAMP OUT (X)	RAMP OUT (X)	23	PB SYNC DM IN (X)	135-22, 607-11A	PB SY
			22	J-AUDIO SERIAL IN	134-10	J-AUDI
1/5	PCM AREA	PCM AREA OUT	21	J-AUDIO CLOCK IN	134-9	J-AUD
			20	L:J-AUDIO CS IN	134-11	L:J-A
			19	CAP FG IN	134-6	CAP
1/5	M RF SW PULSE	M RF SW PULSE IN	18	TAPE DIRECTION F/$\overline{R}$	135-9	TAPE D
1/5	RF CONTROL SW	RF CONTROL SW PULSE IN	17			
1/5	SREF.P	S REF PULSE IN	16			
1/5	PB PCM SWP	PB PCM SWP IN	15	H:PCM PB/REC IN	134-4	H:PCI
1/5	PB SREF PULSE	PB SREF PULSE IN	14	H:PCM AFREC IN	134-3	H:PI
			13			
1/5	REC PCM CARRIER (G)		12	H:PCM MUTE OUT	603-12B	H:PCI
1/5	REC PCM CARRIER (X)	REC PCM CARRIER OUT (X)	11			
		Ø1G1-GND	10	SP/$\overline{LP}$ OUT	603-10B	SP
		REG -9V-1 IN	9	Ø1G1-GND		
-9V		REG -9V-1 IN	8	REG -9V-1 IN	-9V	
		REG -5V-1 IN	7	REG -9V-1 IN		
-5V		Ø1G1-GND	6	REG -5V-1 IN	-5V	
		Ø1G1-GND	5	Ø1G1-GND		
		REG +5V-1 IN	4	Ø1G1-GND		
5V		REG +5V-1 IN	3	REG +5V-1 IN	5V	
			2	REG +5V-1 IN		
			1	REG +5V-1 IN		

CN602 (AU-157)

		B		A		
9V		REG +9V-1 IN	30	REG +9V-1 IN	9V	
		REG +9V-1 IN	29	REG +9V-1 IN		
			28			
1/5	L:RESET	L:RESET IN	27	PB PCM IN (G)	135-23, 128-14	PB F
			26	PB PCM IN (X)	135-24, 128-13	PB F
			25	GND		
			24		-2	
1/5	L:FULL ERASE ON	L:FULL ERASE ON IN	23			
			22			
1/5	EDIT CTL	$\overline{EDIT\ CTL}$ IN	21	N.C	☆ H22	
1/5	PCM2 AFR PB/$\overline{EE}$	H:PCM2 AFR PB/$\overline{EE}$ IN	19	N.C	☆ H23	
1/5	PCM1 AFR PB/$\overline{EE}$	H:PCM1 AFR PB/$\overline{EE}$ IN	18			
			17	PCM WHITE IN	133-7	H PCI
1/5	H:PCM MUTE		16			
		H:PCM MUTE IN	15	CH2 PCM OUT (G)		
H20 ☆		N.C	14	CH2 PCM OUT (X)		
			13			
H21 ☆		N.C	12	CH1 PCM OUT (G)		
			11	CH1 PCM OUT (X)		
1/5	PCM REC MUTE		10			
		H:PCM REC MUTE IN	9	CH2 PCM IN (G)		
			8	CH2 PCM IN (X)		
1/5	H:PCM PB/EE		7			
		H:PCM PB/EE IN	6	CH1 PCM IN (G)		
			5	CH1 PCM IN (X)		
			4			
		ANALOG-GND-2	3	ANALOG-GND-2		
		ANALOG-GND-2	2	ANALOG-GND-2		
			1		-4	

AU-157

A | B | C | D | E | F | G | H

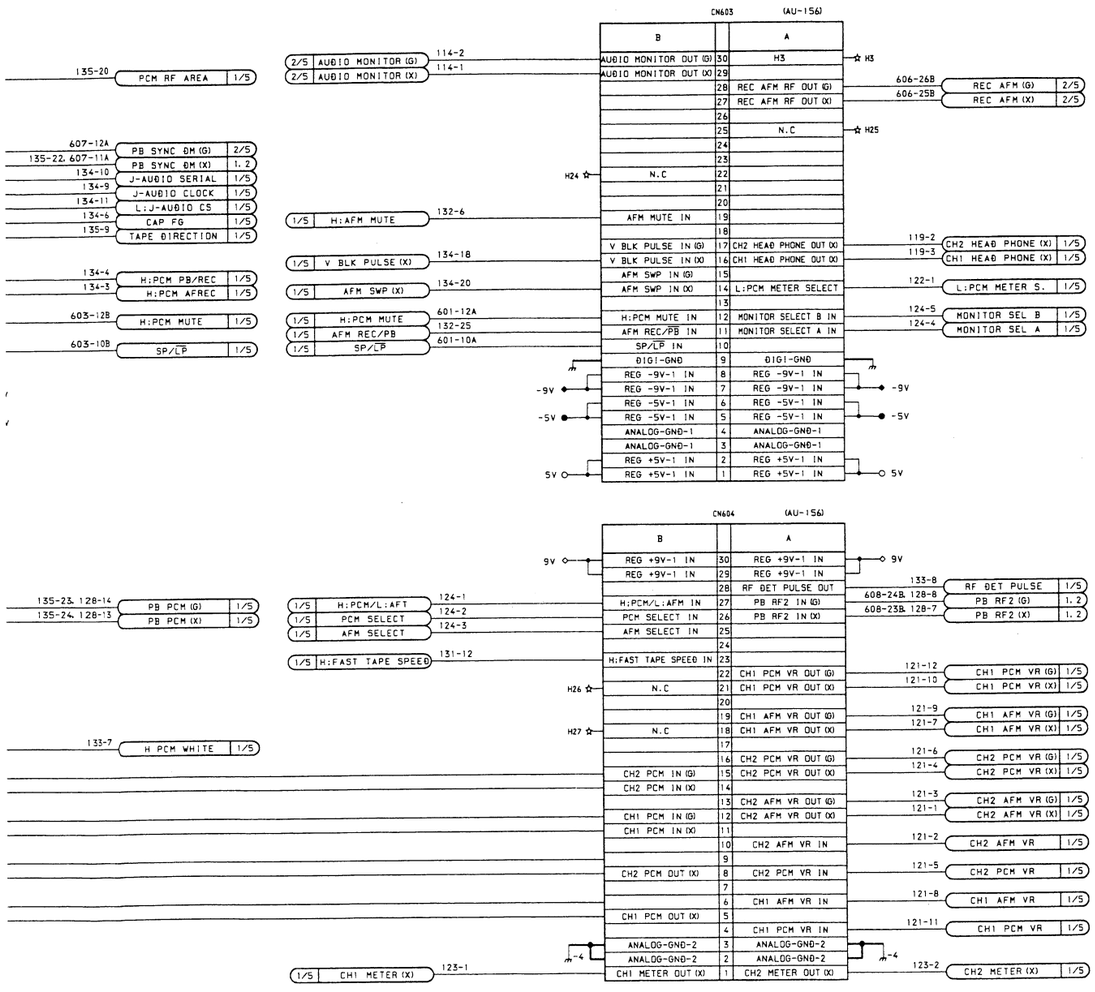

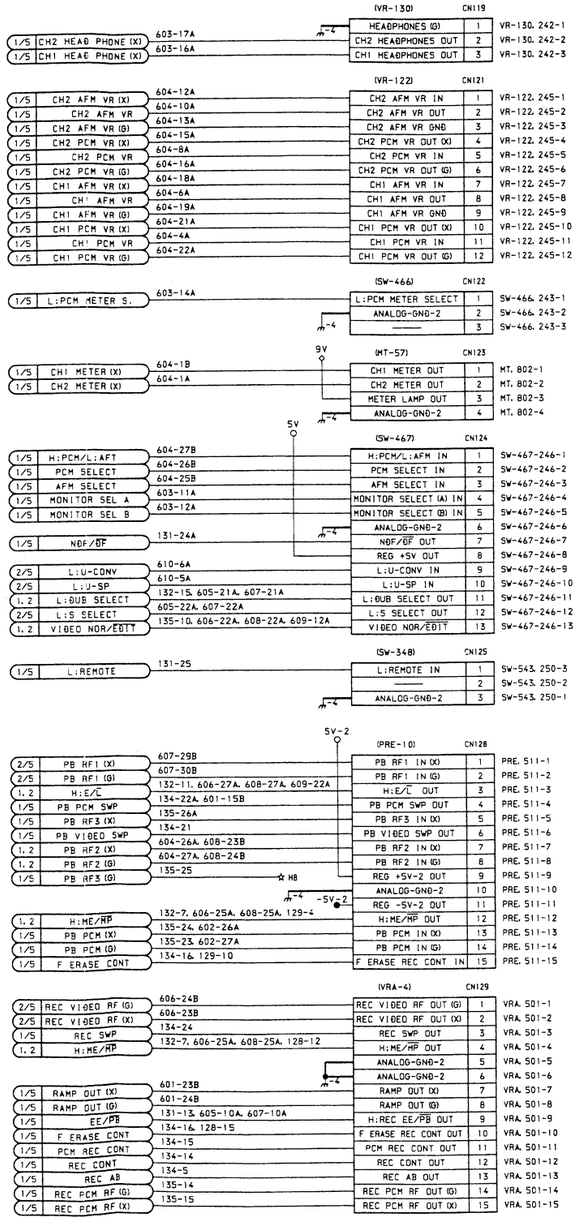

MB-356 BOARD (1/5)

BOARD NO. 1-642-955-11, 12
EVO-9850 (J) : # 10001—
EVO-9850 (UC) : # 10031—

MB-356 (2/5)

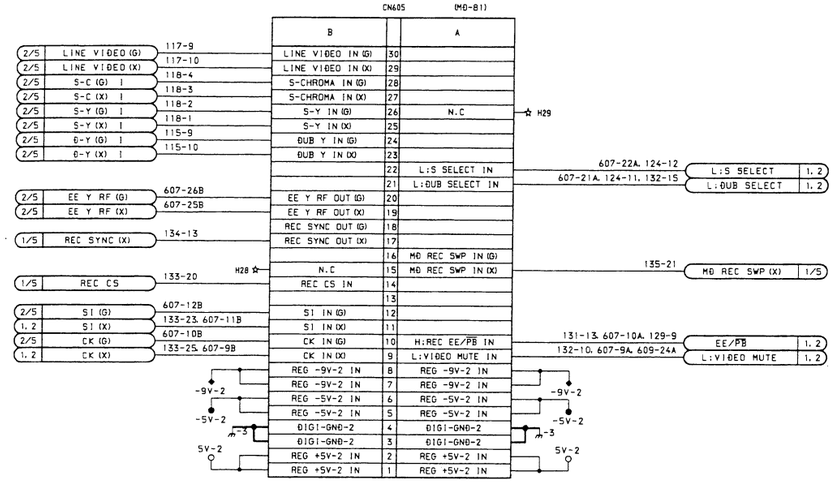

MD-81

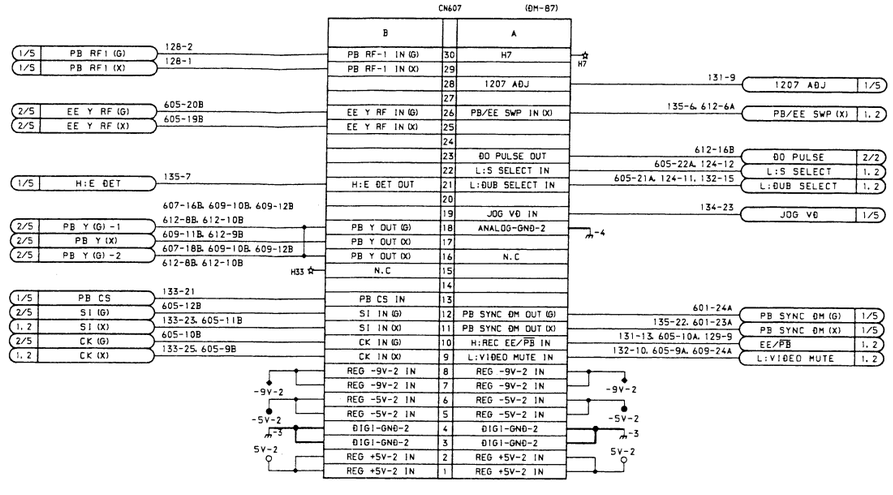

DM-87

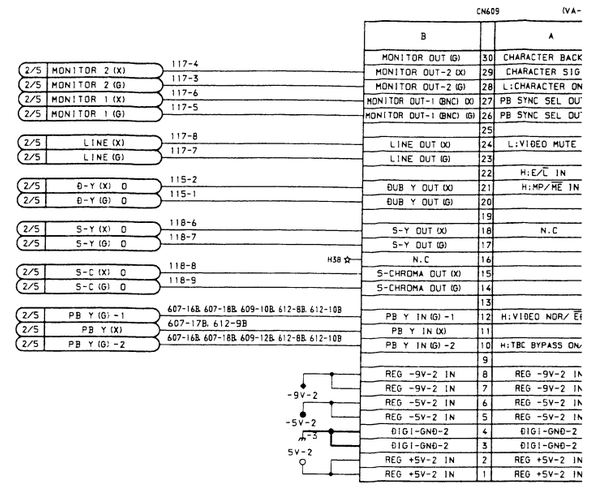

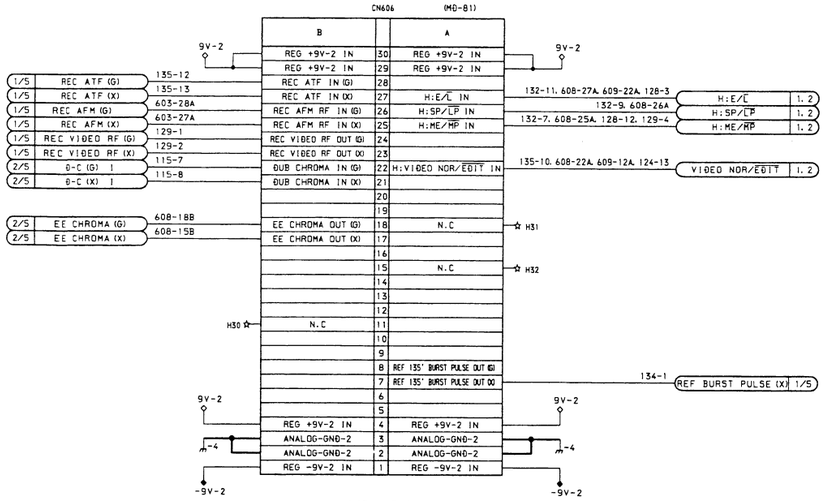

MD-81

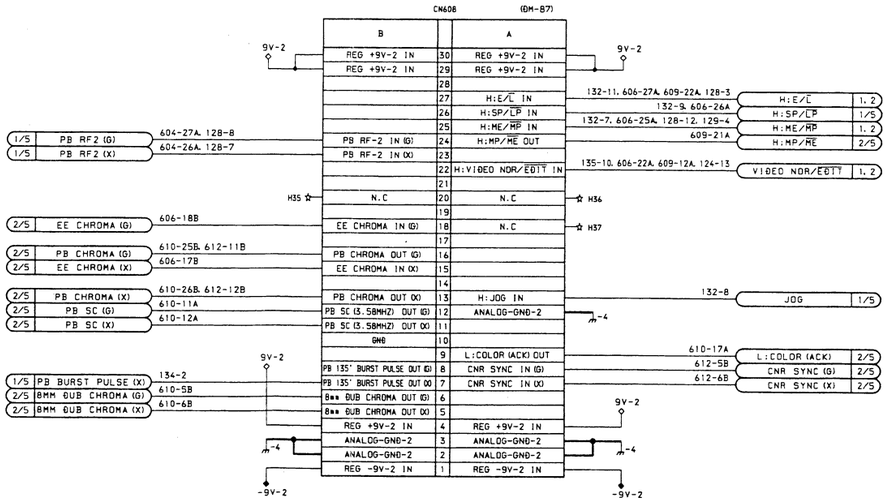

DM-87

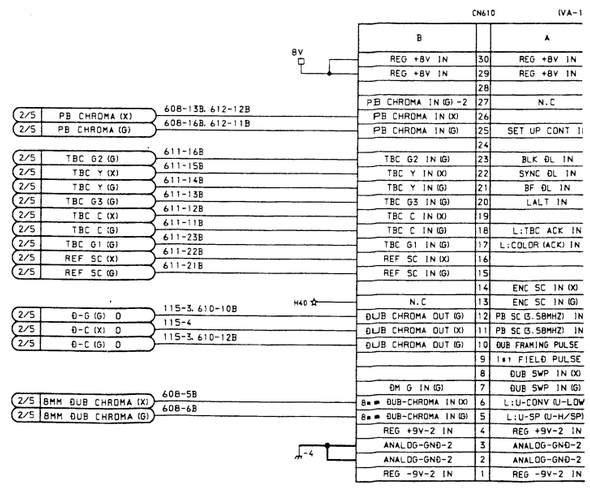

VA-111

13-75

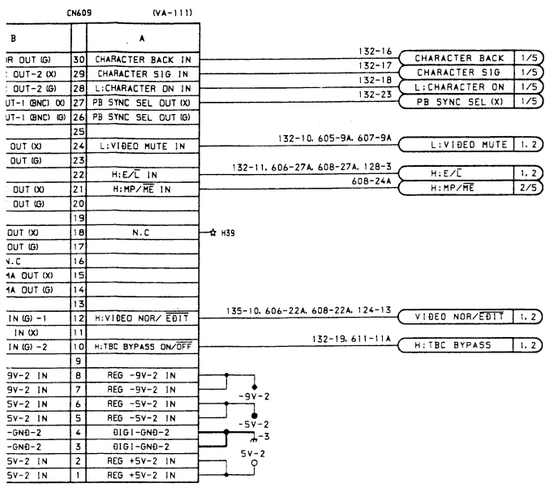

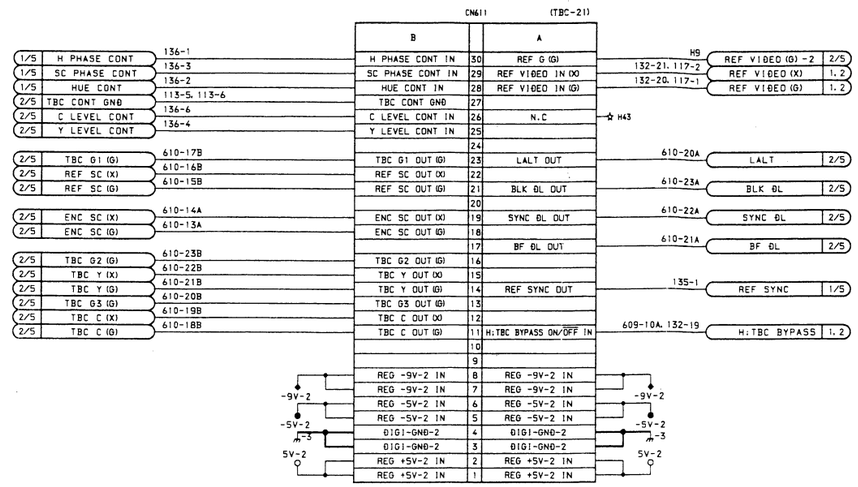

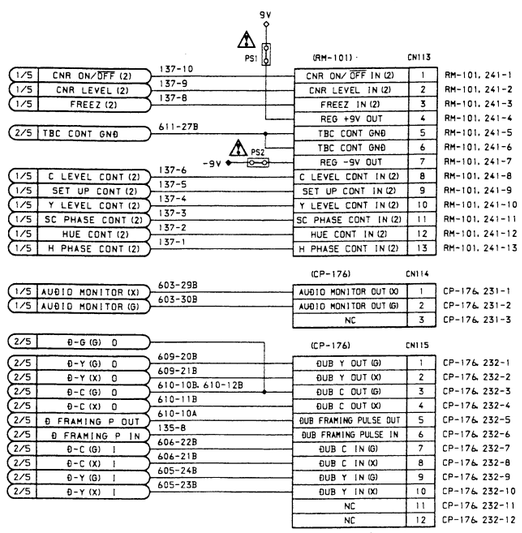

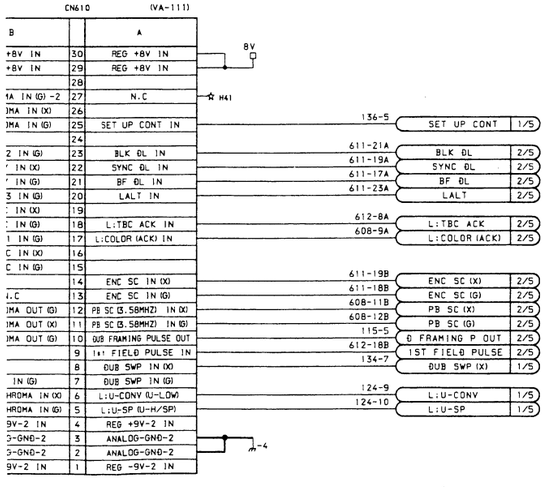

VA-111

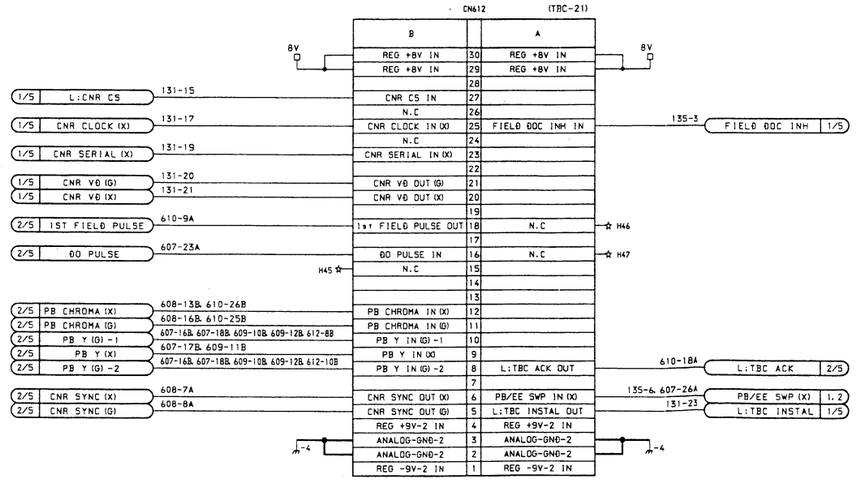

TBC-21

MB-356 BOARD (2/5)

BOARD NO. 1-642-955-11, 12
EVO-9850 (J) : #10001—
EVO-9850 (UC) : #10031—

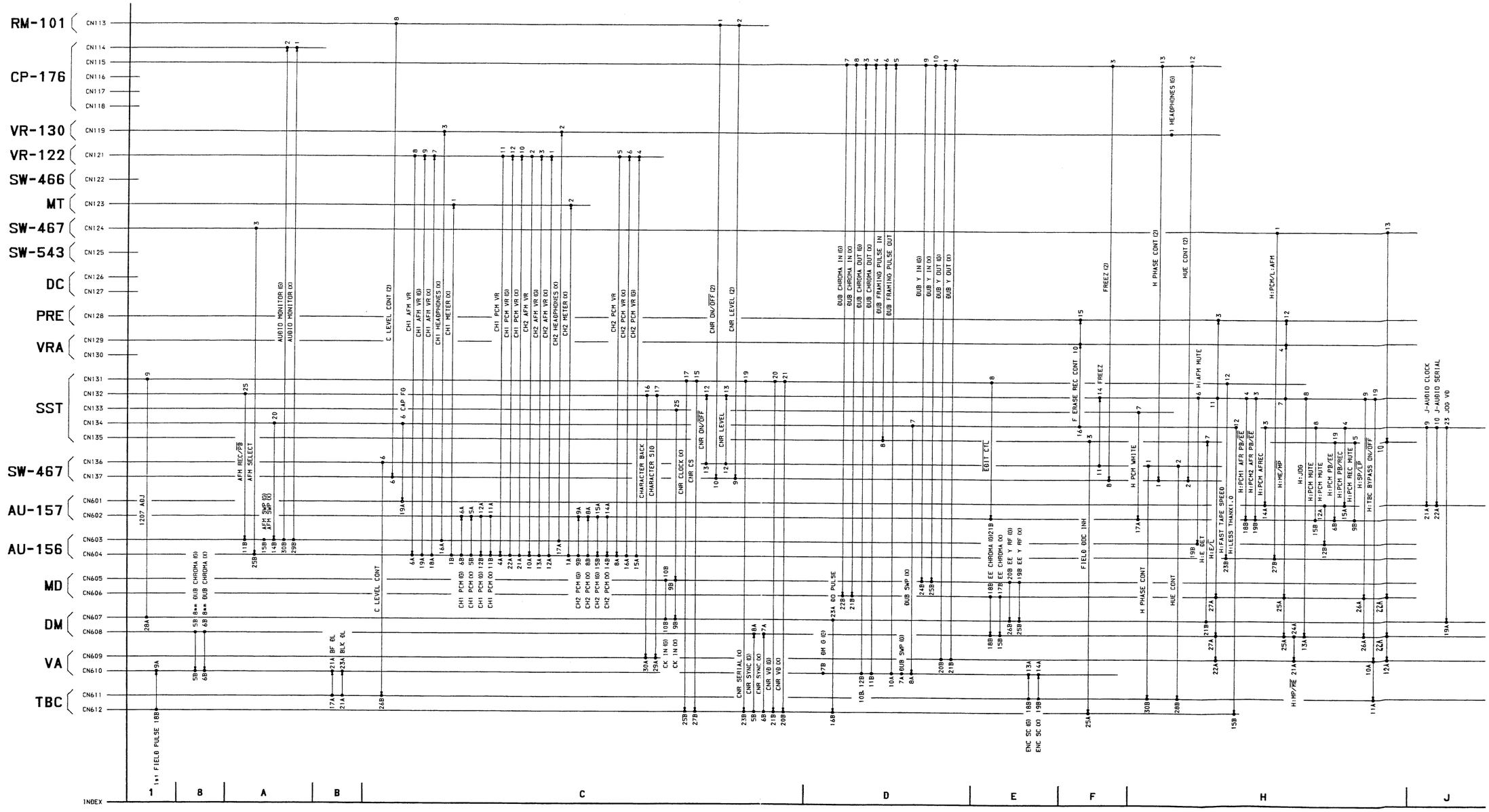

MB-356 BOARD (3/5)

BOARD NO. 1-642-955-11, 12
EVO-9850 (J) : #100□1-
EVO-9850 (UC) : #100□1-

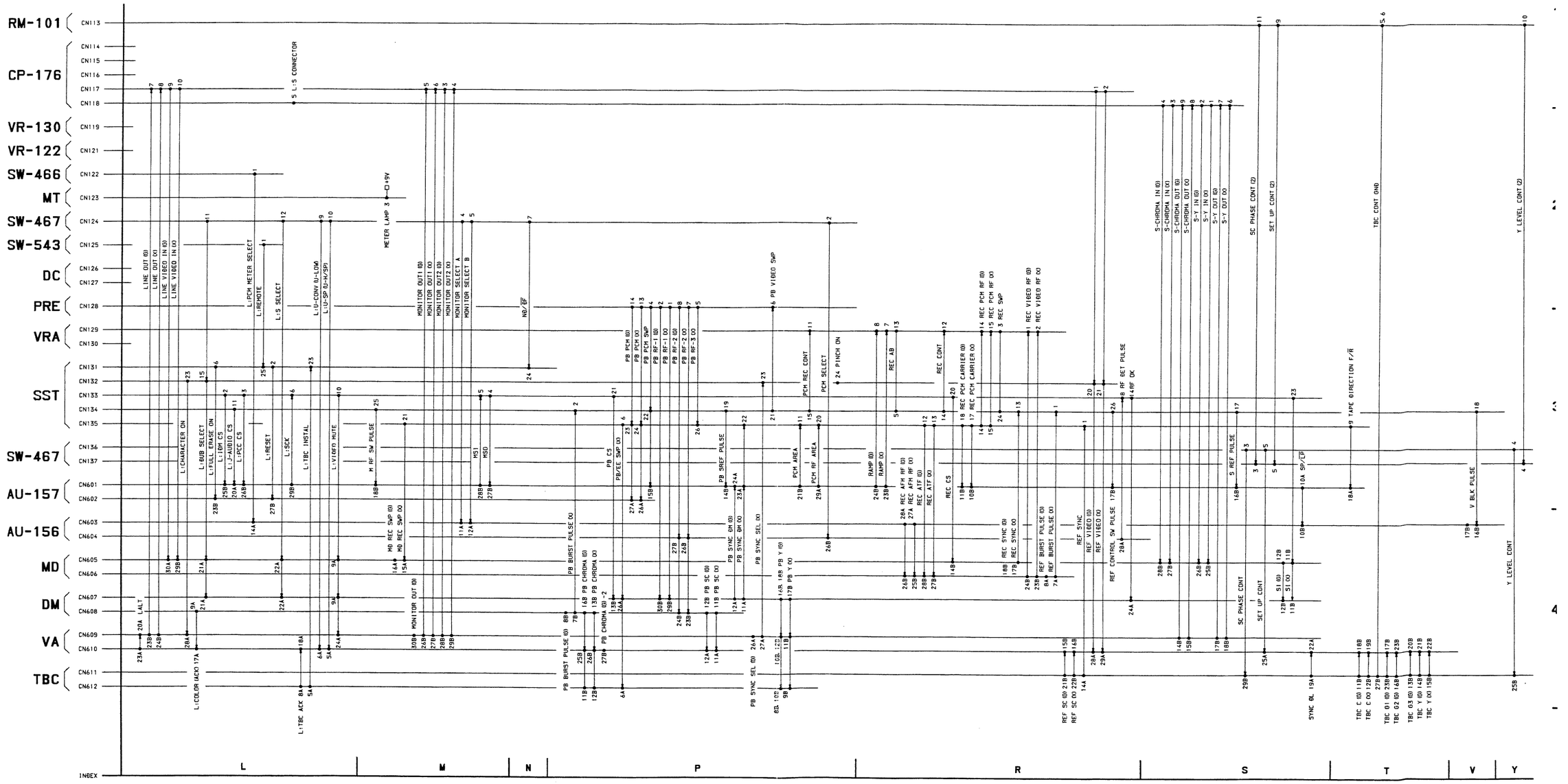

MB-356 BOARD (4/5)

BOARD NO. 1-642-955-11, 12
EVO-9850 (J) : # 10001—
EVO-9850 (UC) : # 10031—

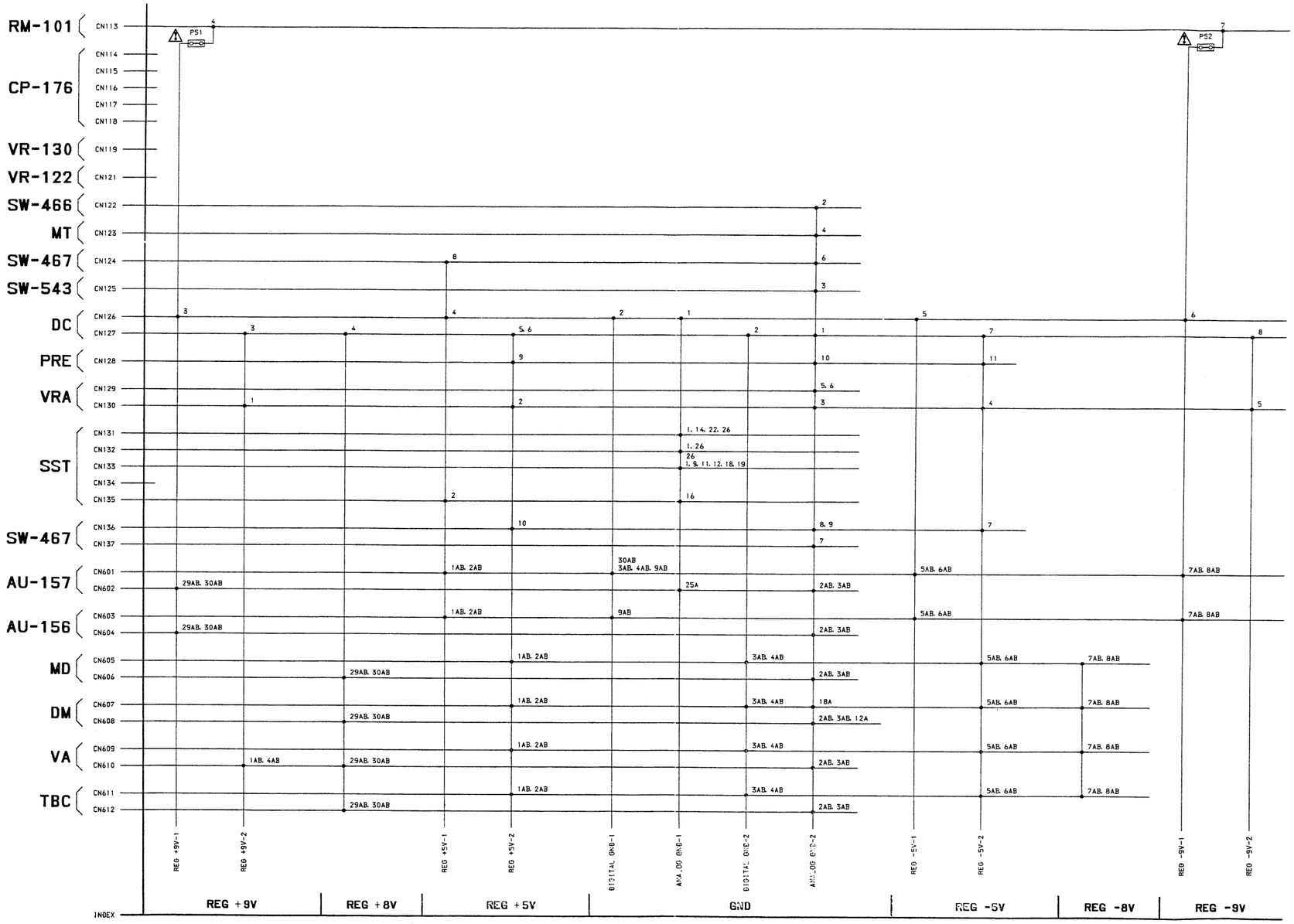

注意1：⚠印のついた部品は安全性を維持するために重要な部品です。従って交換する時は必ず指定の部品を使って下さい。

NOTE:
The ⚠-marked components are critical to safety.
Replace only with same components as specified.

MB-356 BOARD (5/5)

BOARD NO. 1-642-955-11, 12
EVO-9850 (J) : #10001—
EVO-9850 (UC) : #10031—

A B C D E F G H

Serial No.: (J) 10001—10030
Serial No.: (UC) 10031—10070

CP-177 BOARD
A Side

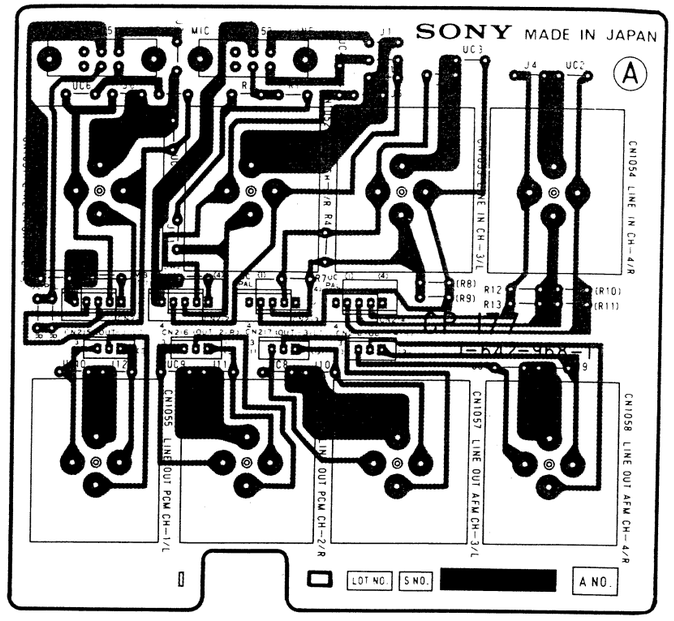

1-642-968-11 A SIDE

A Side is the same as Component Side

CP-177 BOARD
B Side

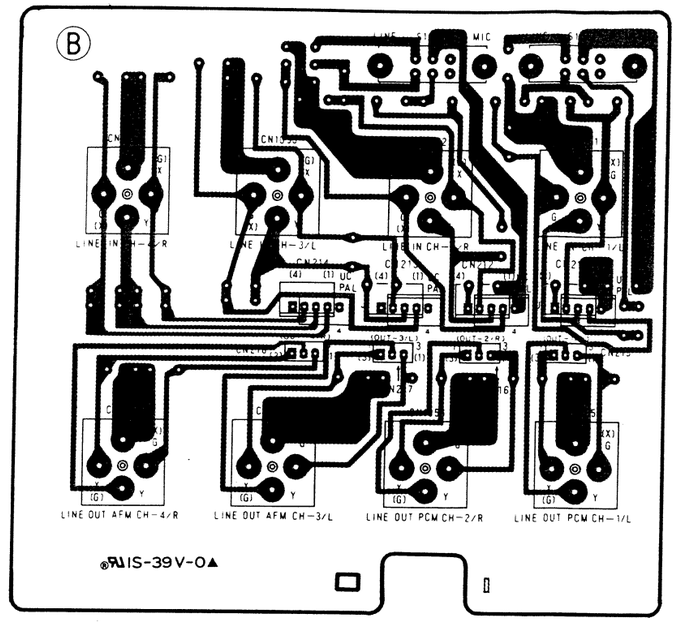

1-642-968-11 B SIDE

B Side is the same as Soldering Side

Serial No.: (J) 10031 and higher
Serial No.: (UC) 10071 and higher

CP-177 BOARD
A Side

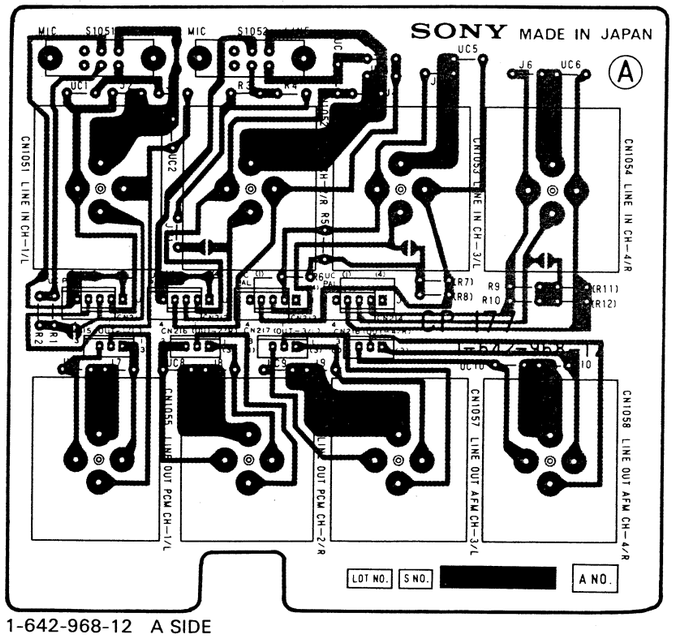

1-642-968-12 A SIDE

A Side is the same as Component Side

CP-177 BOARD
B Side

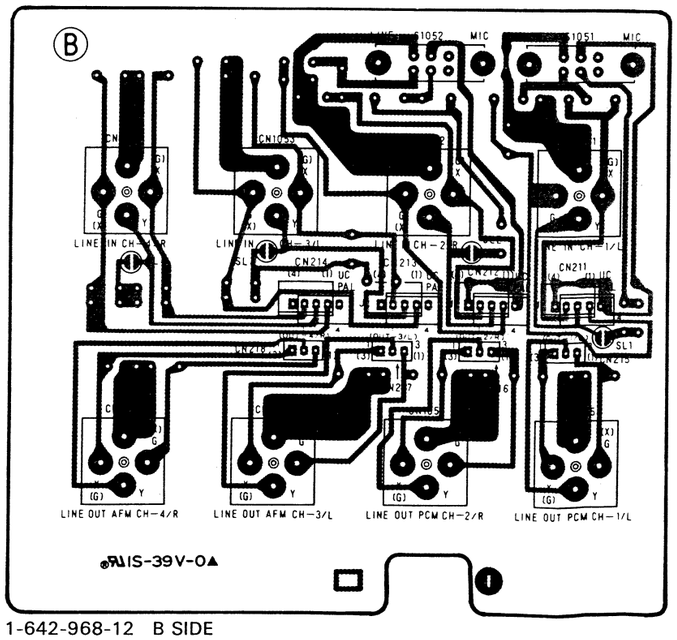

1-642-968-12 B SIDE

B Side is the same as Soldering Side

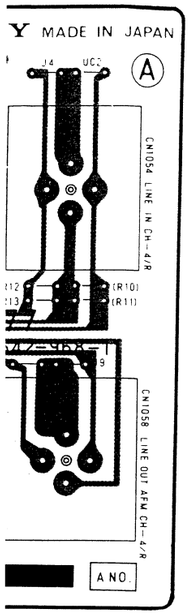

CP-177 BOARD
B Side

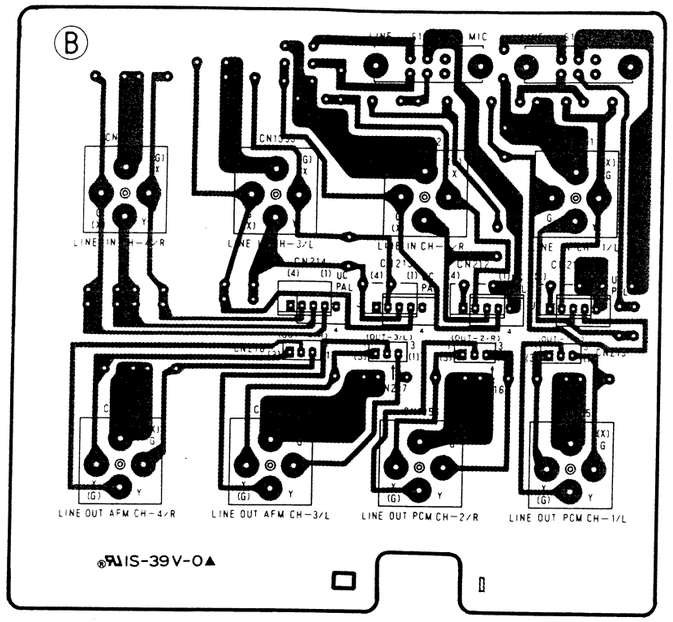

1-642-968-11 B SIDE

B Side is the same as Soldering Side

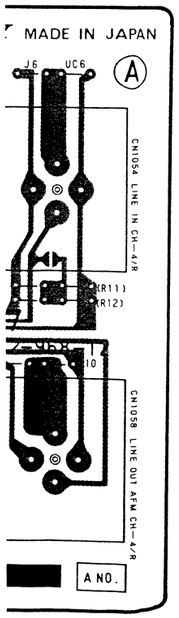

CP-177 BOARD
B Side

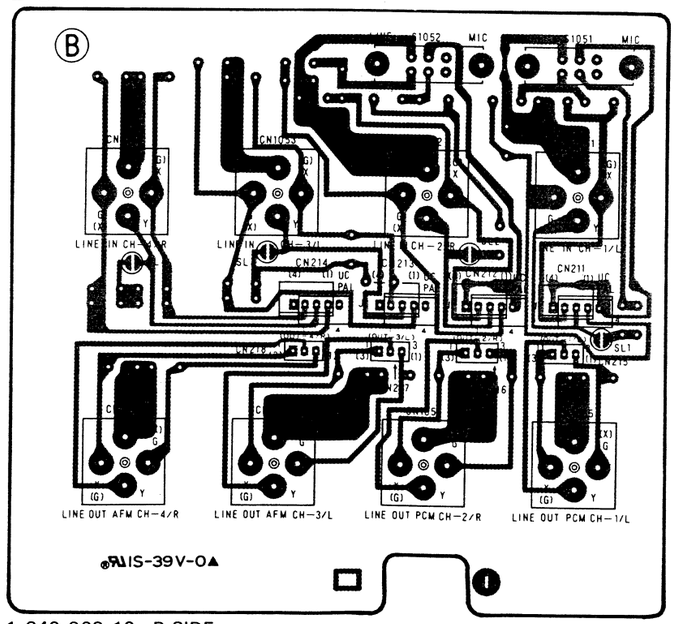

1-642-968-12 B SIDE

B Side is the same as Soldering Side

FRAME CP-177, DC-57 **FRAME** CP-177, DC-57

Serial No.: (J) 10001—10030
Serial No.: (UC) 10031—10070

DC-57 BOARD
A Side

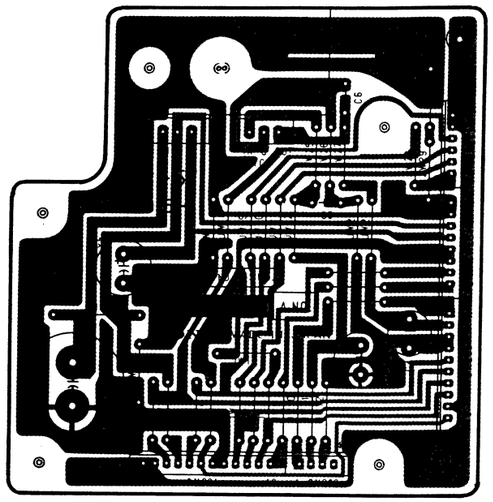

1-643-015-11 A SIDE

A Side is the same as Component Side

DC-57 BOARD
B Side

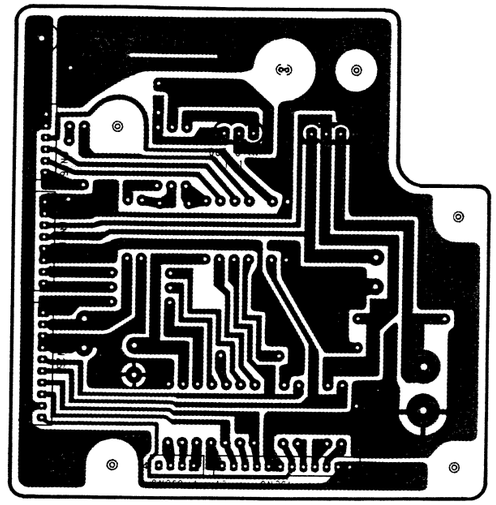

1-643-015-11 B SIDE

B Side is the same as Soldering Side

Serial No.: (J) 10031 and higher
Serial No.: (UC) 10071 and higher

DC-57 BOARD
A Side

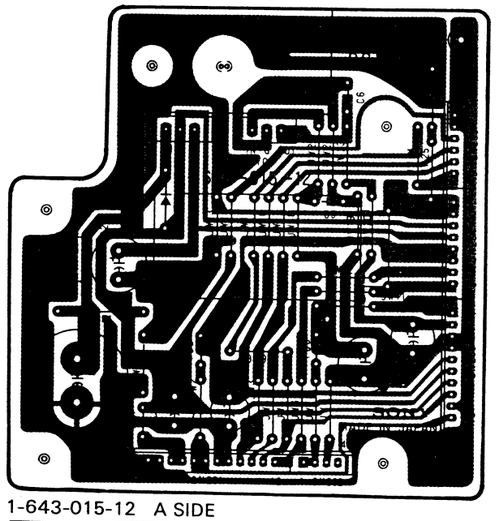

1-643-015-12 A SIDE

A Side is the same as Component Side

DC-57 BOARD
B Side

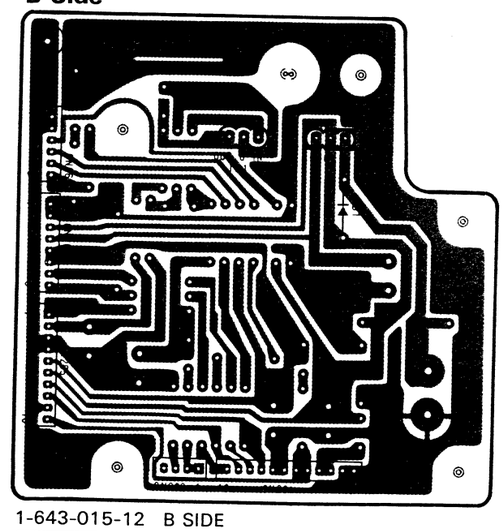

1-643-015-12 B SIDE

B Side is the same as Soldering Side

AC-121, CP-177, DC-57, HP-52, MT-57A, SW-466, VR-122, VR-130

FRAME WIRING (1/2)

FRAME WIRING (1/2) AC-121, CP-177, DC-57, HP-52, MT-57A, SW-466, VR-122, VR-130

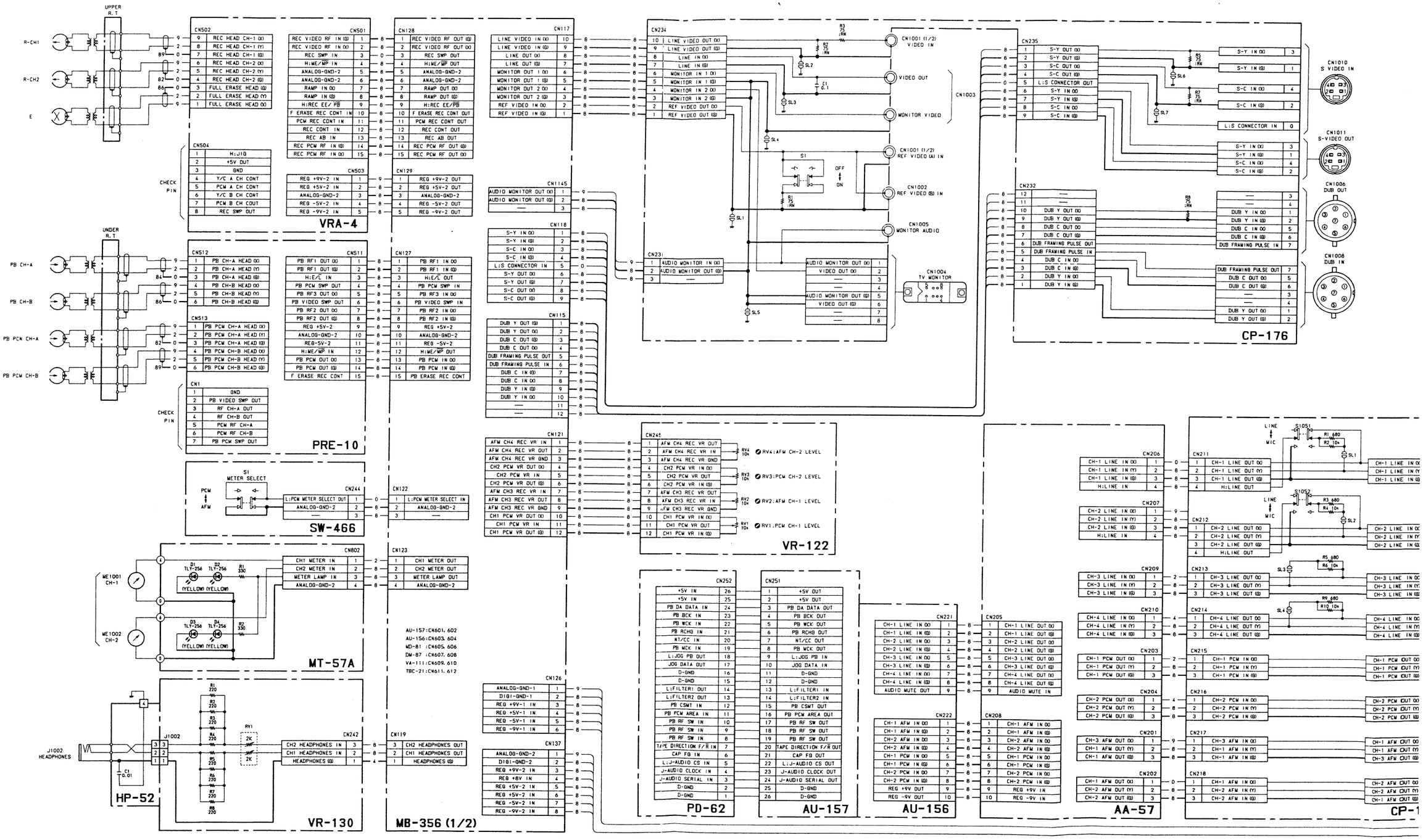

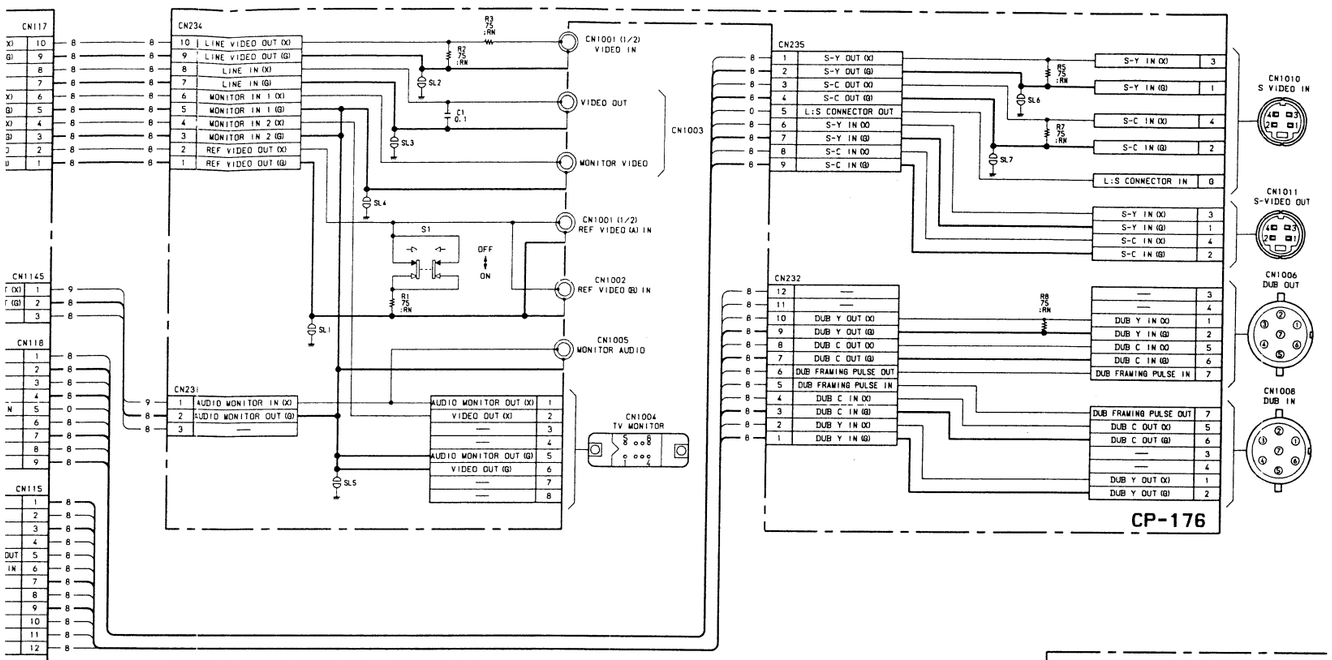

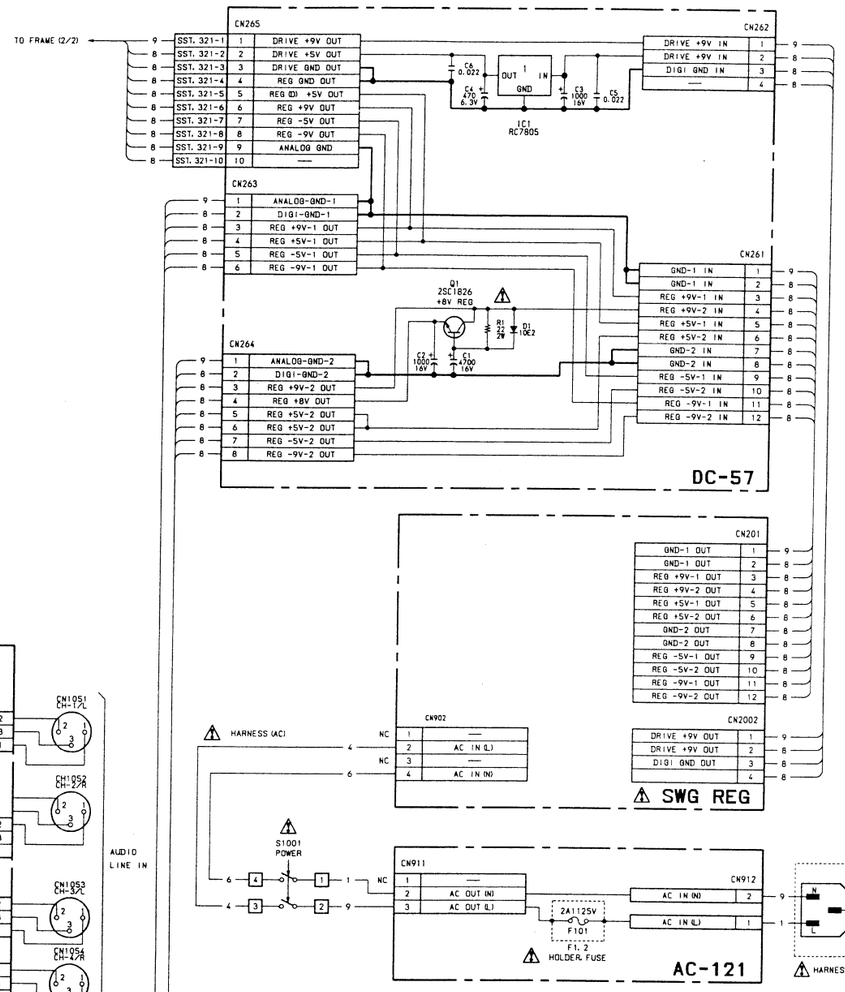

FRAME WIRING (1/2)

EVO-9850 (J) : # 10001—
EVO-9850 (UC) : # 10031—

TR-72 BOARD
Component Side

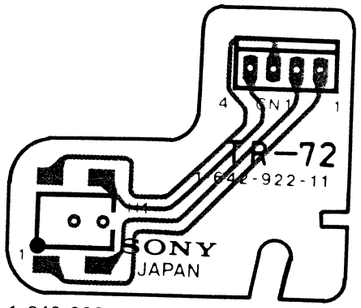

1-642-922-11 COMPONENT SIDE

TS-74 BOARD
Solder Side

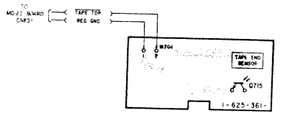

1-625-361-11 SOLDER SIDE

RM-101 BOARD
A Side

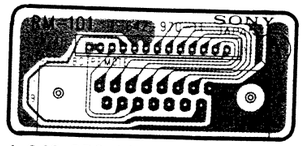

1-642-970-11 A SIDE

A Side is the same as Component Side

RM-122 BOARD
A Side

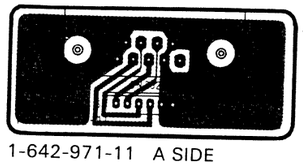

1-642-971-11 A SIDE

A Side is the same as Component Side

SW-540 BOARD
A Side

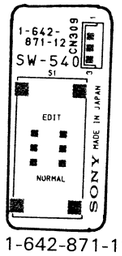

1-642-871-11, 12 A SIDE

A Side is the same as Component Side

SW-543 BOARD
A Side

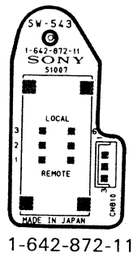

1-642-872-11 A SIDE

A Side is the same as Component Side

RM-101 BOARD
B Side

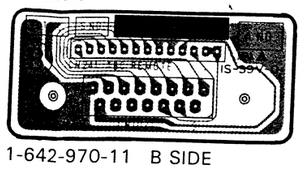

1-642-970-11 B SIDE

B Side is the same as Soldering Side

RM-122 BOARD
B Side

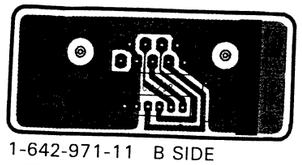

1-642-971-11 B SIDE

B Side is the same as Soldering Side

SW-540 BOARD
B Side

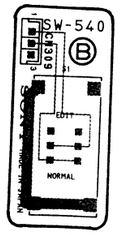

1-642-871-11, 12 B SIDE

B Side is the same as Soldering Side

SW-543 BOARD
B Side

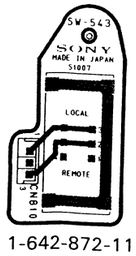

1-642-872-11 B SIDE

B Side is the same as Soldering Side

RM-101, RM-122, SW-540, SW-543, TR-72, TS-74 FRAME WIRING (2/2) FRAM

FRAME WIRING (2/2) RM-101, RM-122, SW-540, SW-543, TR-72, TS-74

RM-101 BOARD

B Side

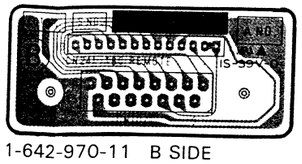

1-642-970-11 B SIDE

B Side is the same as Soldering Side

RM-122 BOARD

B Side

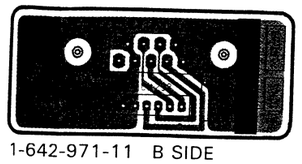

1-642-971-11 B SIDE

B Side is the same as Soldering Side

SW-540 BOARD

B Side

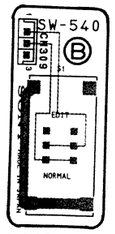

1-642-871-11, 12 B SIDE

B Side is the same as Soldering Side

SW-543 BOARD

B Side

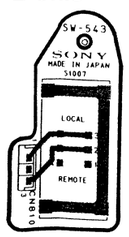

1-642-872-11 B SIDE

B Side is the same as Soldering Side

13-86

FRAME WIRING (2/2) RM-101, RM-122, SW-540, SW-543, TR-72, TS-74

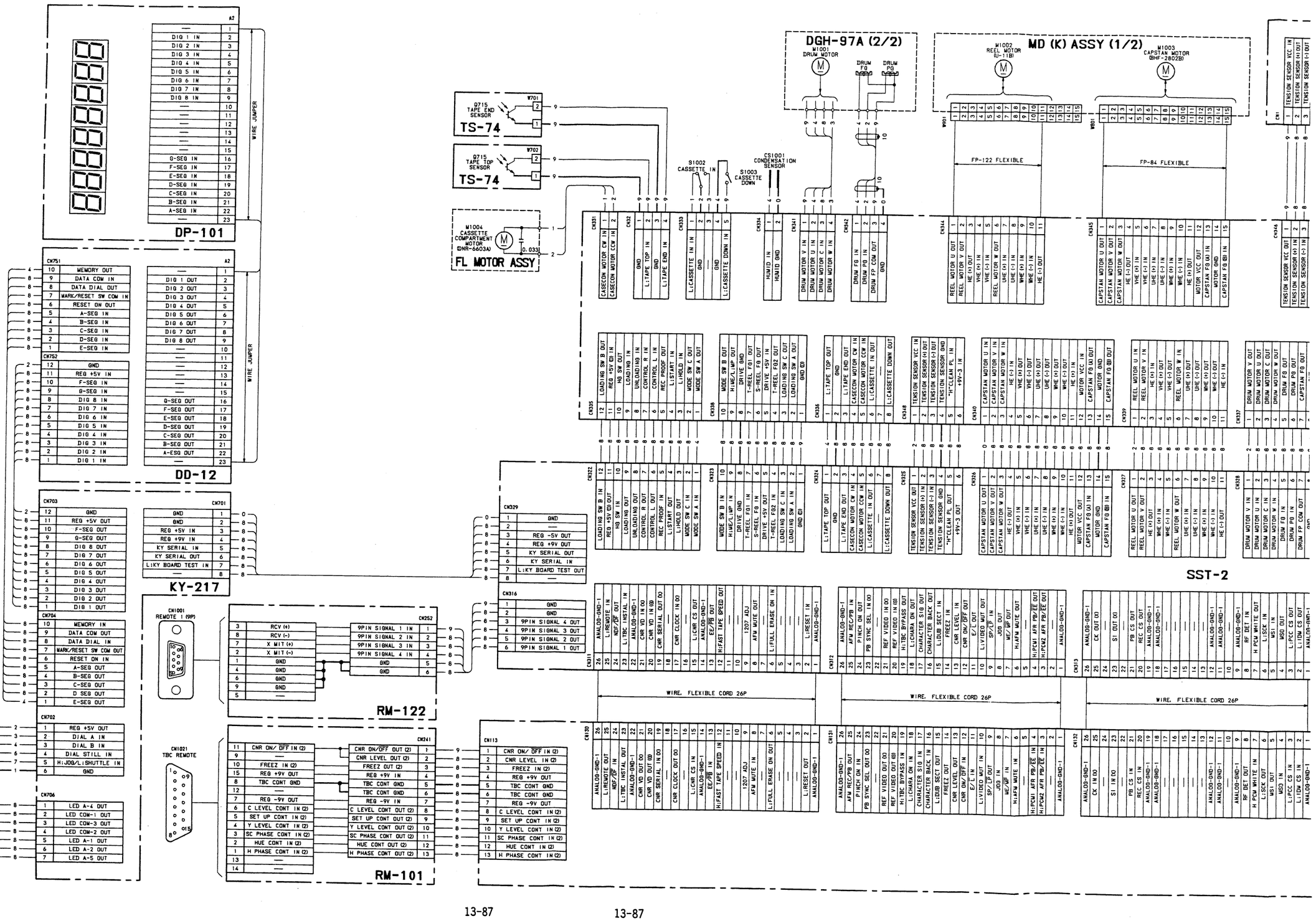

FRAME WIRING (2/2) RM-101, RM-122, SW-540, SW-543, TR-72, TS-74

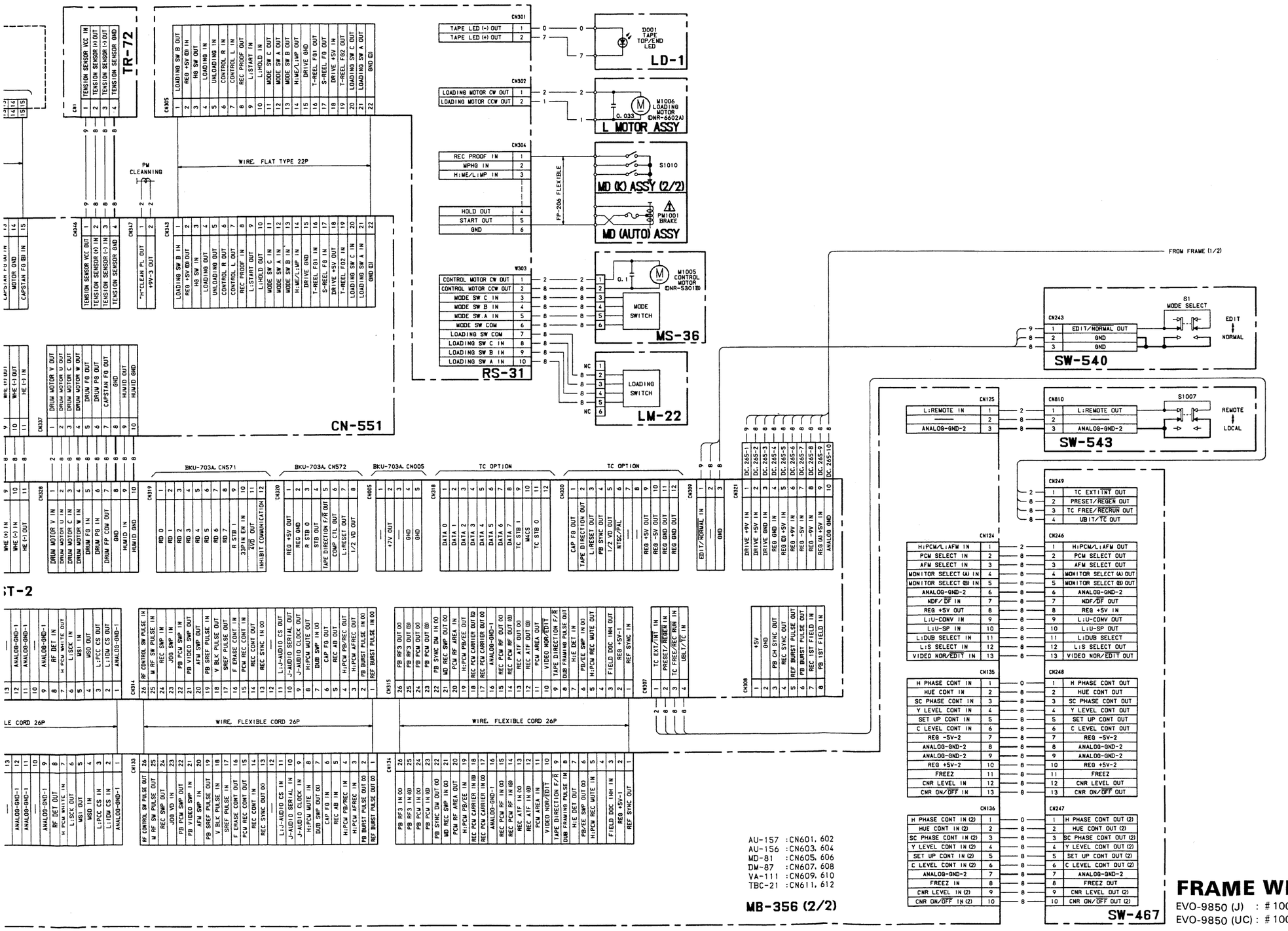

AU-157 :CN601, 602
AU-156 :CN603, 604
MD-81 :CN605, 606
DM-87 :CN607, 608
VA-111 :CN609, 610
TBC-21 :CN611, 612

MB-356 (2/2)

FRAME WIRING (2/2)

EVO-9850 (J) : # 10001—
EVO-9850 (UC) : # 10031—

SECTION 14
SPARE PARTS AND FIXTURES

14-1. PARTS INFORMATION

(1) Components marked with ⚠ on the exploded views and electrical spare list are critical to safe operation. Replace these components with Sony Parts whose part numbers appear in this manual or in service manual supplements published by Sony.

(2) Replacement Parts supplied from the Sony Parts Center will sometimes have a different shape from the original parts. This is due to **improved parts and/or engineering changes or standardization of genuine parts**.
This manual's exploded views and electrical spare parts list indicate the part numbers of **the standardized genuine parts at the present.** Regarding engineering part changes by the engineering department, refer to Sony service bulletins and service manual supplements.

(3) The parts marked with **s** in the SP (Supply Code) column of the exploded views and electrical spare parts lists are normally stocked for replacement purposes. The parts marked with **o** in the SP column are not normally required for routine service work. Orders for parts marked with **o** will be processed, but allow for additional delivery time.

(4) Items with no part number and/or no description are not stocked because they are seldom required for routine service.

(5) All resistors are in ohms.

14-2. EXPLODED VIEWS

• Exploded views are composed of the following blocks.

(1) Reel Table Block 14-3
Tension Regulator Arm Assembly
T Reel Table
S Reel Table
Cleaning Roller Assembly
Sensor Assembly

(2) Threading Ring and Tape Path Blocks 14-4
Slant Guide Block
Threading Motor
Loading Ring
T Main Brake
S Main Brake
Capstan Motor
Entrance Guide (K) Assembly

(3) Head Drum and Threading Control Blocks 14-5
Head Drum
L Slider Assembly
Tape Guides
Pinch Press Lever
L-switch Assembly

(4) Mechanism Control Block 14-6
M-switch Assembly
T. S Brake
REW Brake
S Hard Brake
M. Slider
Reel Motor

(5) Cassette-up Compartment Block (1) 14-7
FL Motor (Cassette Loading)
Tape TOP/END sensor
RF Shield Plate

(6) Cassette-up Compartment Block (2) 14

(7) Function Control Chassis Block 14
Function Control Panel
Search Dial Block

(8) Connector Panel Block 14-1

(9) Main Shassis Block 14-1
Switching Regulator
Mounted Circuit Boards

(10) Ornamental Panel Block 14-1
Top Plate
Front Panel
Key Panel
Side Plate
Bottom Plate
Window Assembly

(11) Card Rack Block 14-1
Mounted Circudt Boards

Reel Table Block

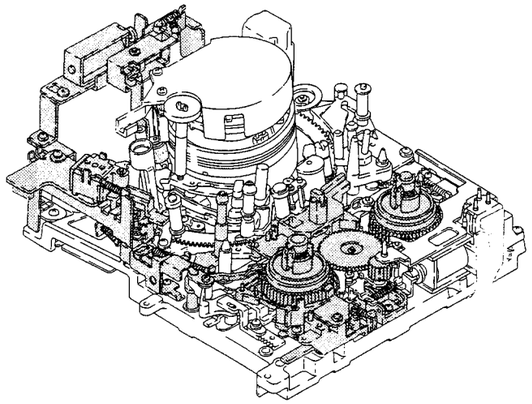

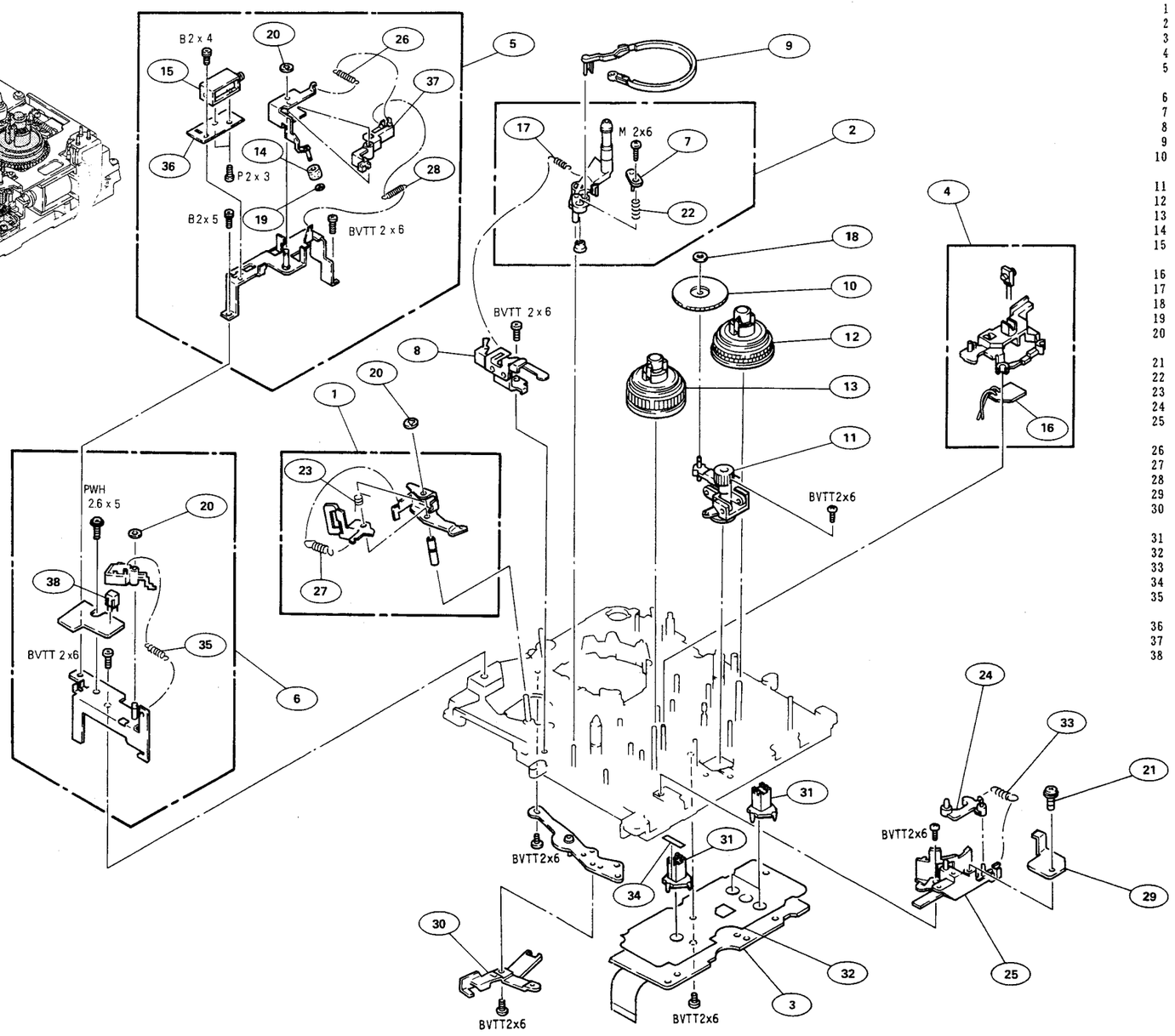

No.	Part No.	SP	Description
1	A-7040-008-A	s	ARM ASSY. PINCH PRESS
2	A-7040-292-A	s	ARM ASSY. TENSION REGULATOR
3	A-7061-818-A	o	MOUNTED CIRCUIT BOARD. RS-31
4	A-7070-024-A	o	MOUNTED CIRCUIT BOARD. LD-1
5	A-8262-346-A	o	ROLLER ASSY. CLEANING
6	A-8262-577-A	s	SENSOR ASSY
7	X-3686-523-1	o	PLATE ASSY. TENSION REGULATOR
8	X-3686-525-1	o	HOOK ASSY. SPRING
9	X-3686-531-1	s	BAND ASSY. TENSION REGULATOR
10	X-3686-763-1	s	GEAR (B) ASSY. DRIVING
11	X-3711-963-1	s	DRIVING COMPLETE ASSY
12	X-3711-998-1	s	TABLE ASSY. REEL. TAKE-UP
13	X-3713-427-1	s	TABLE ASSY. REEL.SUPPLY
14	X-3166-813-1	s	ROLLER ASSY. HC
15	1-454-445-21	s	SOLENOID. PLUNGER (CLEANING)
16	1-613-367-11	o	PRINTED CIRCUIT BOARD. LD-1
17	3-172-898-01	s	SPRING. TENSION
18	3-315-384-31	s	WASHER. STOPPER
19	3-321-393-11	s	WASHER. STOPPER
20	3-669-465-00	s	WASHER (1.5). STOPPER
21	3-669-480-12	s	SCREW. +PTPWH2
22	3-669-666-00	s	SPRING. COMPRESSION
23	3-686-568-01	s	SPRING. TORSION
24	3-686-637-01	o	BRAKE (S). SOFT
25	3-686-760-01	o	GUIDE. BAND
26	3-686-882-01	s	SPRING. TENSION
27	3-686-885-01	s	SPRING. TENSION
28	3-686-904-01	s	SPRING. TENSION
29	3-686-991-01	o	STOPPER. REEL TABLE
30	3-712-406-01	s	CLAMP. WIRE
31	3-712-410-01	s	HOLDER. RS
32	3-712-411-01	s	INSULATOR. RS
33	3-714-014-01	s	SPRING. TENSION
34	3-722-175-01	s	SPACER. MD
35	3-947-120-01	s	SPRING. TENSION
36	3-947-127-01	o	SOLENOID (BASE)
37	3-947-143-02	o	ARM. CR LIMITER
38	8-745-001-07	s	DM-230-1

Threading Ring and Tape Path Blocks

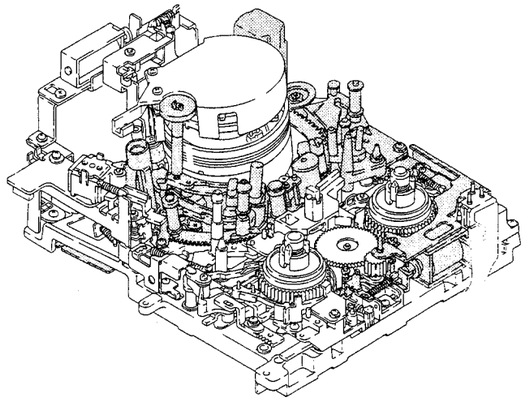

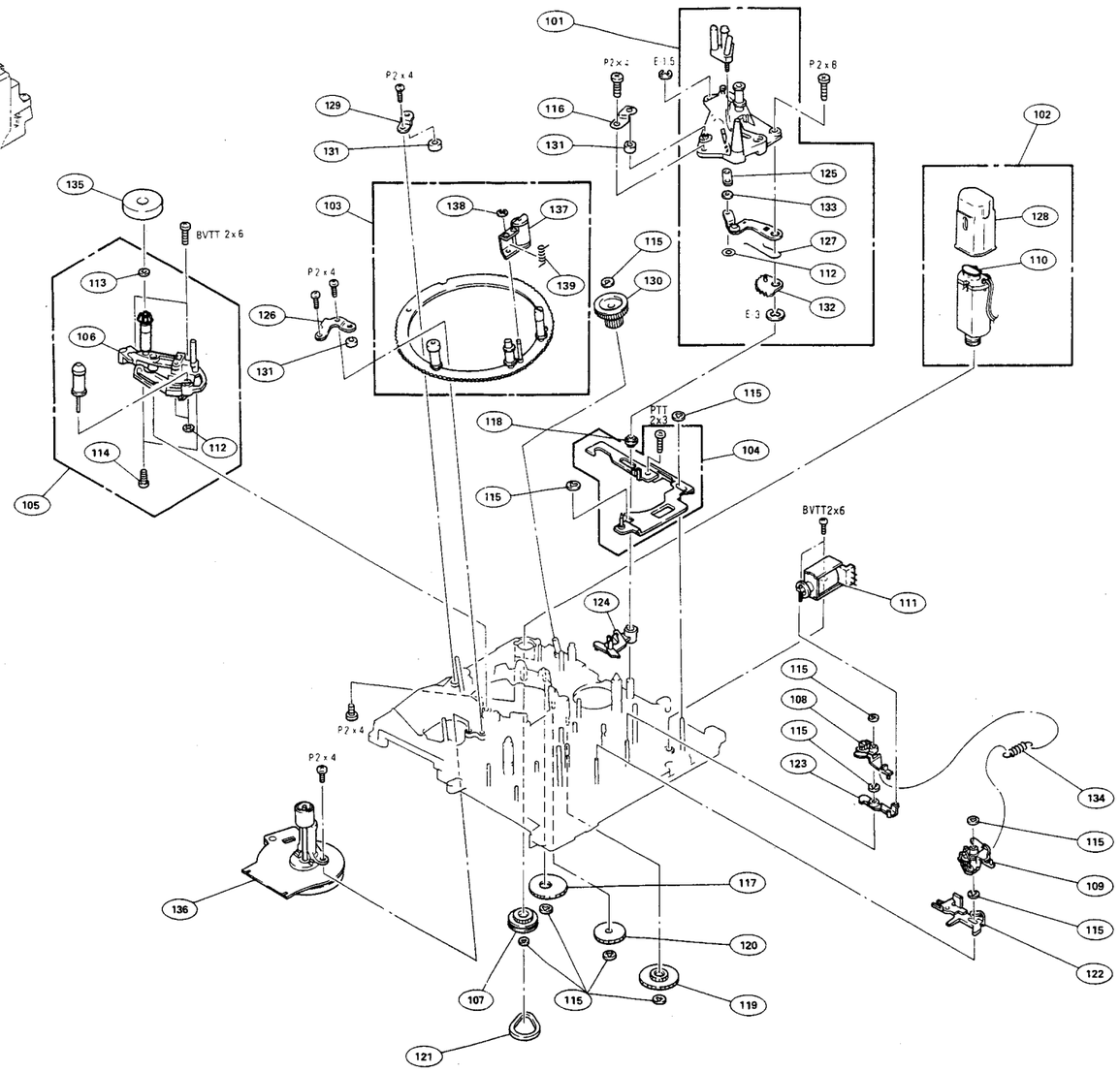

No.	Part No.	SP	Description
101	A-7040-001-A	s	GUIDE BLOCK ASSY, SLANT
102	A-7040-065-A	s	MOTOR ASSY, L (THREADING)
103	A-7040-123-A	s	RING ASSY, LOADING
104	A-7040-199-A	s	SLIDER (M) BLOCK ASSY, LOCK
105	A-7040-294-A	s	GUIDE (K) ASSY, ENTRANCE
106	X-3166-287-1	s	V BLOCK (K) ASSY, ENTRANCE
107	X-3686-514-1	s	GEAR ASSY, No.1
108	X-3686-574-1	s	BRAKE ASSY, MAIN, TAKE-UP
109	X-3713-429-1	s	BRAKE ASSY, MAIN, S
110	1-161-057-00	s	CAP, CERAMIC 0.033MFX
111	1-454-377-21	s	SOLENOID, PLUNGER (BLAKE)
112	3-315-384-31	s	WASHER, STOPPER
113	3-315-414-00	s	WASHER
114	3-316-938-31	s	SCREW (B1.4x4), TAPPING
115	3-669-465-00	s	WASHER (1.5), STOPPER
116	3-686-503-01	o	RETAINER, ROLLER
117	3-686-508-01	s	GEAR, No.2
118	3-686-537-01	s	RETAINER, LOCK SLIDER
119	3-686-544-01	s	GEAR, No.4
120	3-686-545-01	s	GEAR, No.3
121	3-686-546-01	s	BELT, L-MOTOR
122	3-686-629-01	o	SLIDER, SELECTION, UPPER & LOWER
123	3-686-635-01	o	ARM, P
124	3-686-636-04	o	ARM, T, S RELEASE
125	3-686-663-01	s	WASHER, STOPPER, 2 GANG
126	3-686-675-01	o	STOPPER, RING
127	3-686-701-01	s	SPRING
128	3-686-757-01	o	CAP, SHIELD, L-MOTOR
129	3-686-911-01	o	PLATE, TOP, ROLLER
130	3-697-518-01	s	GEAR, No.10
131	3-697-538-01	s	ROLLER, RING
132	3-699-509-01	s	GEAR, SECTOR
133	3-701-436-21	s	WASHER, POLYEHTHYLENE
134	3-713-560-01	s	SPRING, TENSION
135	3-722-153-01	s	FLY WHEEL
136	8-835-364-01	s	MOTOR, DC (BHF-2802B) (CAPSTAN)
137	X-3686-576-1	s	ARM ASSY, PINCH ROLLER
138	3-315-384-31	s	WASHER, STOPPER (2.5)
139	3-726-704-01	o	SPRING, TORSION (0.29)

Head Drum and Threading Control Blocks

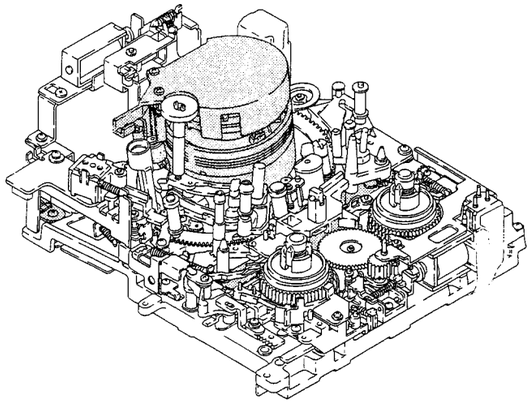

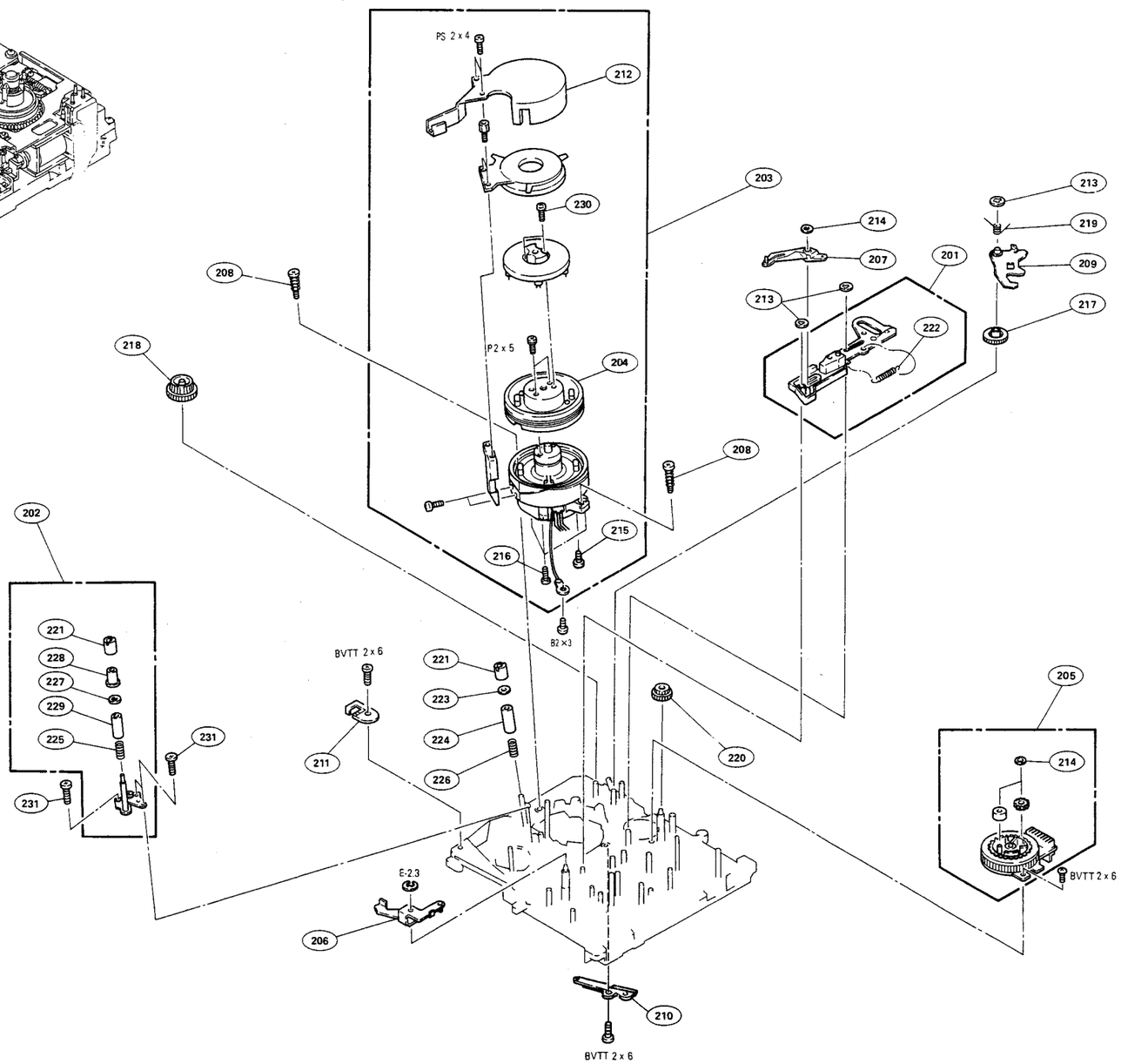

No.	Part No.	SP	Description
201	A-7040-010-A	o	SLIDER ASSY, L
202	A-7040-058-A	s	GUIDE BLOCK COMPLETE ASSY, #5
203	A-8260-395-A	s	DRUM ASSY (DGH-97A-R)
204	A-8260-396-A	s	DRUM ASSY, UPPER, ROTARY (DGR-97-R)
205	X-3166-289-1	s	L-SW ASSY
206	X-3686-509-1	o	LEVER ASSY, PINCH PRESS
207	X-3686-518-3	o	ARM ASSY, TENSION REGULATOR
208	X-3686-569-1	s	SCREW ASSY, FITTING
209	X-3686-579-1	s	CHANGE ASSY, DRIVE
210	1-535-535-11	s	TERMINAL, SHAFT GROUND
211	1-806-682-00	s	SENSOR, DEW CONDENSATION
212	3-176-836-01	o	COVER, DRUM
213	3-315-384-31	s	WASHER, STOPPER
214	3-669-465-00	s	WASHER (1.5), STOPPER
215	3-686-423-01	s	SCREW, FITTING, STATOR
216	3-686-458-03	s	SCREW, (P1.4x3.5), TAPPING
217	3-686-535-01	s	GEAR, No.8
218	3-686-539-01	s	GEAR, No.9
219	3-686-540-01	s	SPRING, TORSION
220	3-686-702-01	s	GEAR, DRIVING, GUIDE, SLANT
221	3-686-724-01	s	NUT, GUIDE
222	3-686-886-01	s	SPRING, TENSION
223	3-686-894-02	o	FLANGE, #3, #4 GUIDE
224	3-686-912-01	s	GUIDE, #3, #4
225	3-699-514-01	s	SPRING, COMPRESSION
226	3-699-609-01	s	SPRING, COMPRESSION
227	3-699-512-01	s	FLANGE, No.5 GUIDE
228	3-699-513-01	s	BOSS, No.5 GUIDE
229	3-699-515-01	s	GUIDE, No.5
230	7-627-552-57	s	SCREW, PRECISION
231	7-627-553-48	s	SCREW, (+P2x4)

Mechanism Control Block

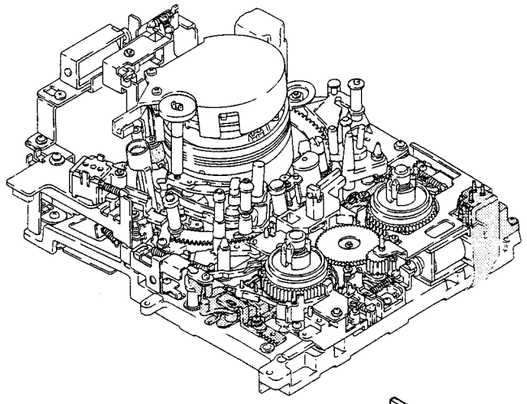

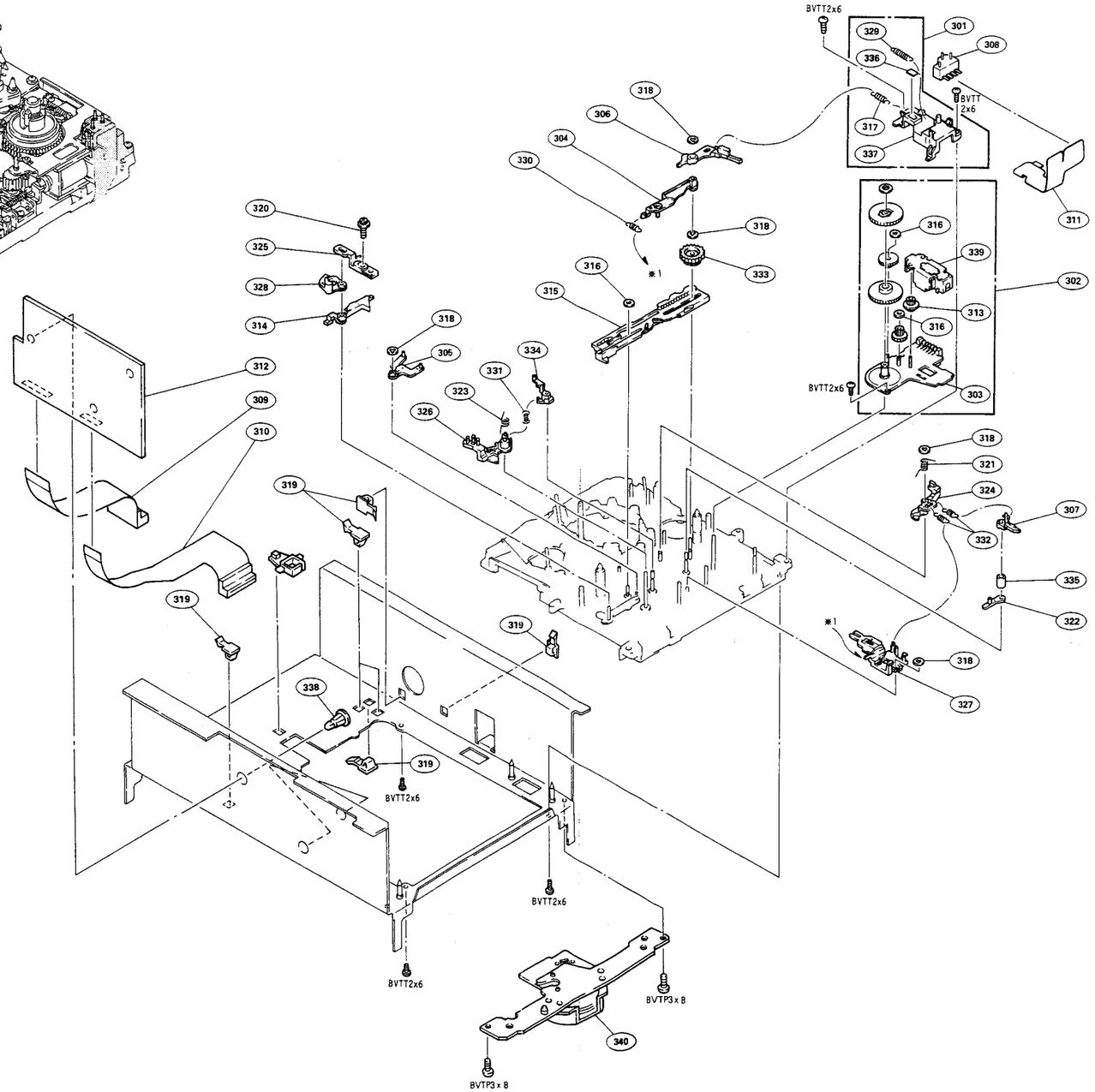

No.	Part No.	SP	Description
301	A-7040-198-A	s	COVER (M) ASSY, C MOTOR
302	A-7040-293-A	s	M-SW ASSY
303	A-7071-498-A	o	MOUNTED CIRCUIT BOARD, MS-36
304	X-3686-528-4	o	ARM ASSY, B RELEASE
305	X-3686-530-1	o	ARM (A) ASSY, SELECTION
306	X-3711-987-2	s	BRAKE ASSY, T.S
307	X-3711-993-1	s	BRAKE ASSY, REW
308	1-572-298-21	s	SWITCH, PUSH (REC PROOF/MPHG/ME/MP)
309	A-7070-624-A	o	FP-84 MOUNTED CIRCUIT BOARD, (FLEXIBLE)
310	A-7070-625-A	o	FP-122 MOUNTED CIRCUIT BOARD, (FLEXIBLE)
311	1-630-923-11	o	FP-206 FLEXIBLE BOARD
312	1-642-953-11	o	PRINTED CIRCUIT BOARD, CN-551
313	3-172-901-01	s	WHEEL, WORM
314	3-172-908-01	o	ARM, MODE
315	3-172-909-01	s	SLIDER, M
316	3-315-384-31	s	WASHER, STOPPER
317	3-714-035-01	s	SPRING, TENSION
318	3-669-465-00	s	WASHER (1.5), STOPPER
319	3-671-150-11	o	CLAMP
320	3-686-528-01	s	SCREW (2x2.6)
321	3-686-579-01	s	SPRING
322	3-686-580-01	o	ARM, SET-UP
323	3-686-603-04	s	SPRING
324	3-686-634-01	o	ARM, RL
325	3-686-642-01	o	PLATE, ADJUSTMENT, BAND
326	3-686-644-01	o	ARM, BAND
327	3-686-656-01	o	SLIDER, B RELEASE
328	3-686-755-01	s	DISK, EJECT
329	3-686-882-01	s	SPRING, TENSION
330	3-686-903-01	s	SPRING, TENSION
331	3-686-905-02	s	SPRING, TENSION
332	3-686-906-01	s	SPRING, TENSION
333	3-686-909-01	s	GEAR, MODE OUTPUT
334	3-686-996-01	s	BRAKE (S), HARD
335	3-716-933-01	s	SPACER, REW BRAKE
336	3-716-963-01	s	SHOE, C MOTOR COVER
337	3-739-107-02	s	COVER (M), C MOTOR
338	4-912-181-11	o	SUPPORT, PC
339	8-835-138-01	s	MOTOR, DC (DNR-5301B) (CONTROL)
340	8-835-304-11	s	MOTOR, DCU-11B (REEL)

Cassette Up Compartment Block (1)

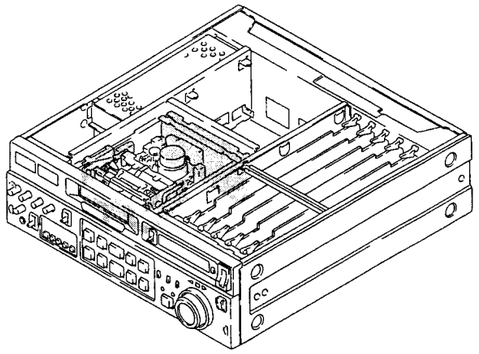

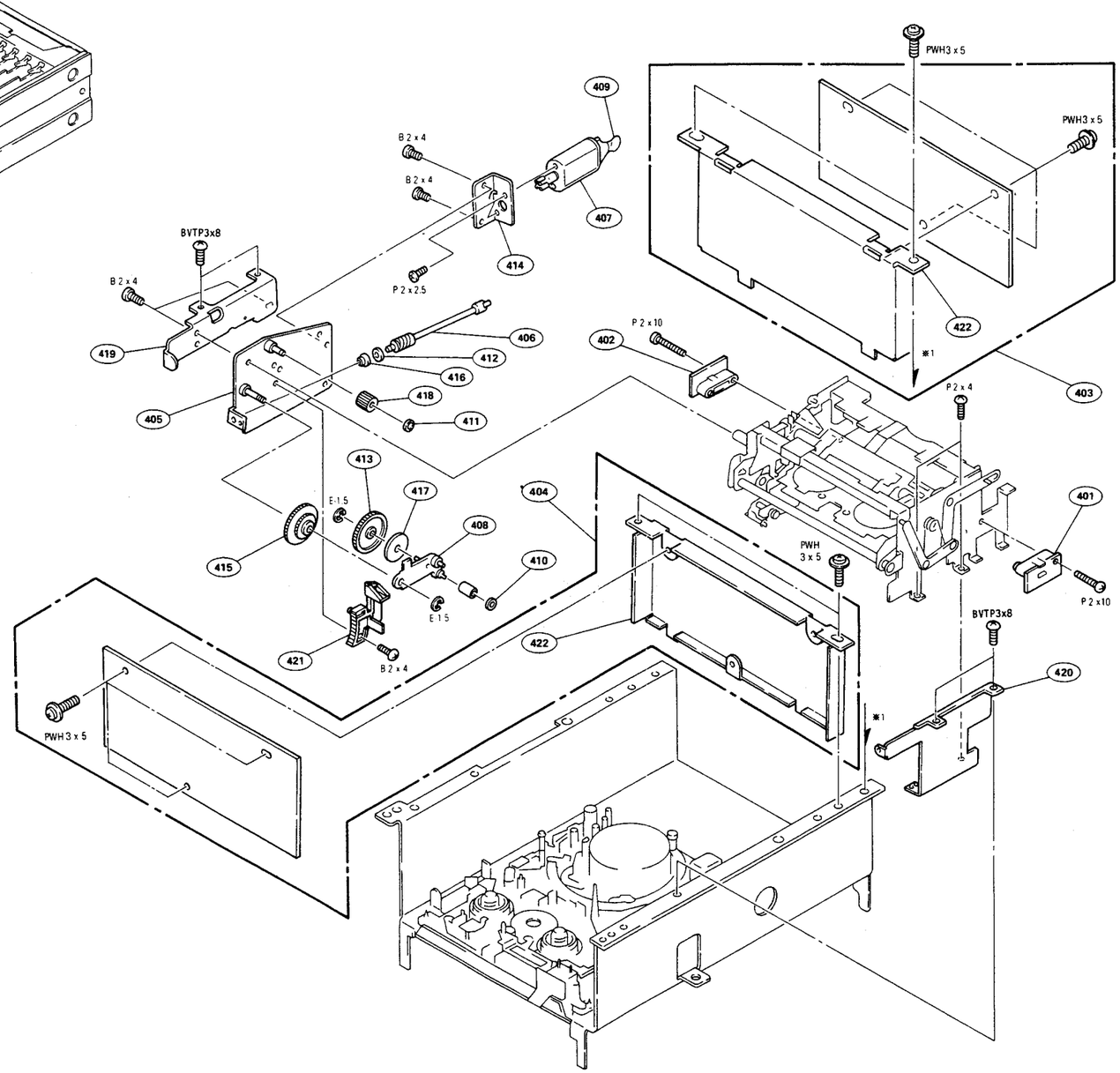

No.	Part No.	SP	Description
401	A-7070-627-A	o	MOUNTED CIRCUIT BOARD, TS-74 (RIGHT)
402	A-7070-628-A	o	MOUNTED CIRCUIT BOARD, TS-74 (LEFT)
403	A-8271-232-A	o	COMPLETE PCB, VRA-4
404	A-8271-233-A	o	COMPLETE PCB, PRE-10
405	X-3711-934-1	o	PLATE SUB ASSY BLOCK
406	X-3711-935-3	s	SHAFT ASSY, WORM
407	X-3711-936-1	s	MOTOR ASSY, FL (CASSETTE COMPARTMENT)
408	X-3714-193-1	s	LEVER ASSY (B), GEAR
409	1-161-057-00	s	CAP, CERAMIC 0.033MFX
410	3-315-414-31	s	WASHER
411	3-669-465-00	s	WASHER (1.5), STOPPER
412	3-701-437-11	s	WASHER
413	3-713-430-01	s	GEAR (B)
414	3-713-431-01	o	BRACKET, MOTOR
415	3-713-433-01	s	GEAR (A)
416	3-713-439-01	s	BEARING
417	3-713-441-01	o	SPRING, LEAF
418	3-713-452-01	s	GEAR (C)
419	3-724-140-01	o	BRACKET (LEFT)
420	3-724-141-01	o	BRACKET (RIGHT)
421	3-724-913-03	s	RACK
422	3-947-136-01	o	PLATE SHIELD, RF

Cassette Up Compartment Block (2)

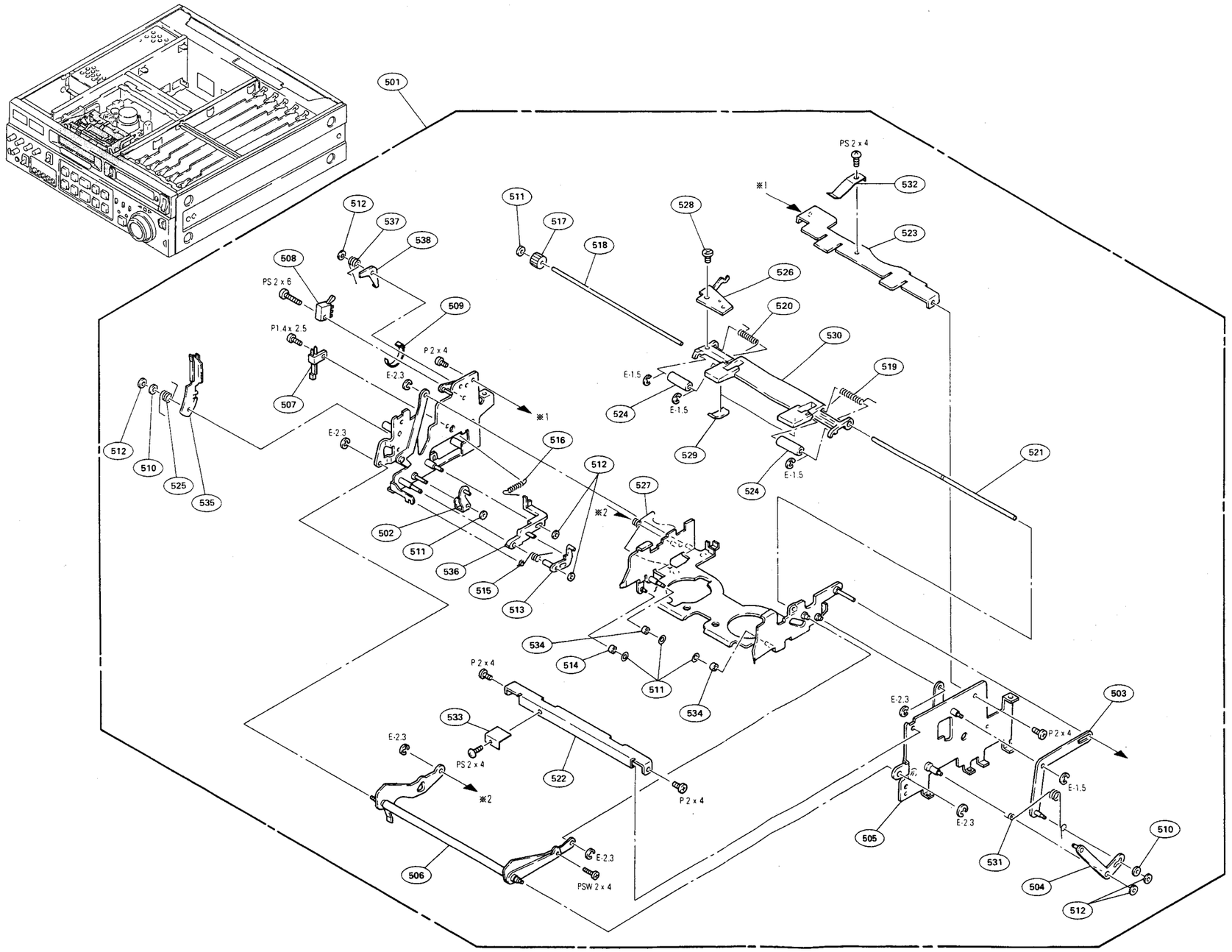

No.	Part No.	SP	Description
501	A-8262-783-A	s	CASSETTE COMPARTMENT BLOCK ASSY
502	X-3686-541-1	o	CLAW ASSY, LOCK
503	X-3711-930-1	s	LEVER ASSY, HOLDER
504	X-3711-931-4	s	LEVER ASSY, DOOR
505	X-3711-932-1	o	PLATE (A) ASSY, SIDE
506	X-3711-937-1	o	JOINT ASSY
507	1-553-226-00	s	SWITCH, LEAF
508	1-570-407-11	s	SWITCH, SLIDE
509	3-337-402-01	o	BAND, BINDING
510	3-533-073-01	s	WASHER
511	3-578-265-11	s	WASHER, STOPPER
512	3-669-465-00	s	WASHER (1.5), STOPPER
513	3-686-692-01	s	PREVENTION, SLIDER
514	3-686-693-01	o	ROLLER, LOCK
515	3-686-694-01	s	SPRING, TORTION
516	3-696-047-01	s	SPRING, TENSION
517	3-713-429-01	s	GEAR (D)
518	3-713-440-01	o	SHAFT, ROLLER
519	3-713-442-01	s	SPRING (RIGHT)
520	3-713-445-01	s	SPRING (LEFT)
521	3-713-457-01	o	SHAFT, JOINT
522	3-713-458-01	o	REINFORCEMENT
523	3-713-462-03	o	STOPPER, HOLDER
524	3-713-466-01	s	ROLLER
525	3-713-488-01	s	SPRING (2), TORSION
526	3-713-492-01	s	PLATE, FUNCTION, LEVER
527	3-713-620-01	s	SPRING (1), TORSION
528	3-713-622-01	s	SCREW (M1.3x4), TAPPING, 0
529	3-713-625-01	s	SHOE, BRAKE
530	3-713-626-01	s	COVER, MULTI
531	3-713-628-01	s	SPRING, TORSION
532	3-713-658-01	s	SPRING
533	3-716-921-01	s	SPRING, LEAF
534	3-719-590-01	s	ROLLER, ASSIST
535	3-721-125-01	s	LEVER, LOCK
536	3-721-136-01	s	SLIDER, LOCK
537	3-721-163-01	s	SPRING
538	3-721-166-01	s	LEVER, SWITCH

Function Control Chassis Block

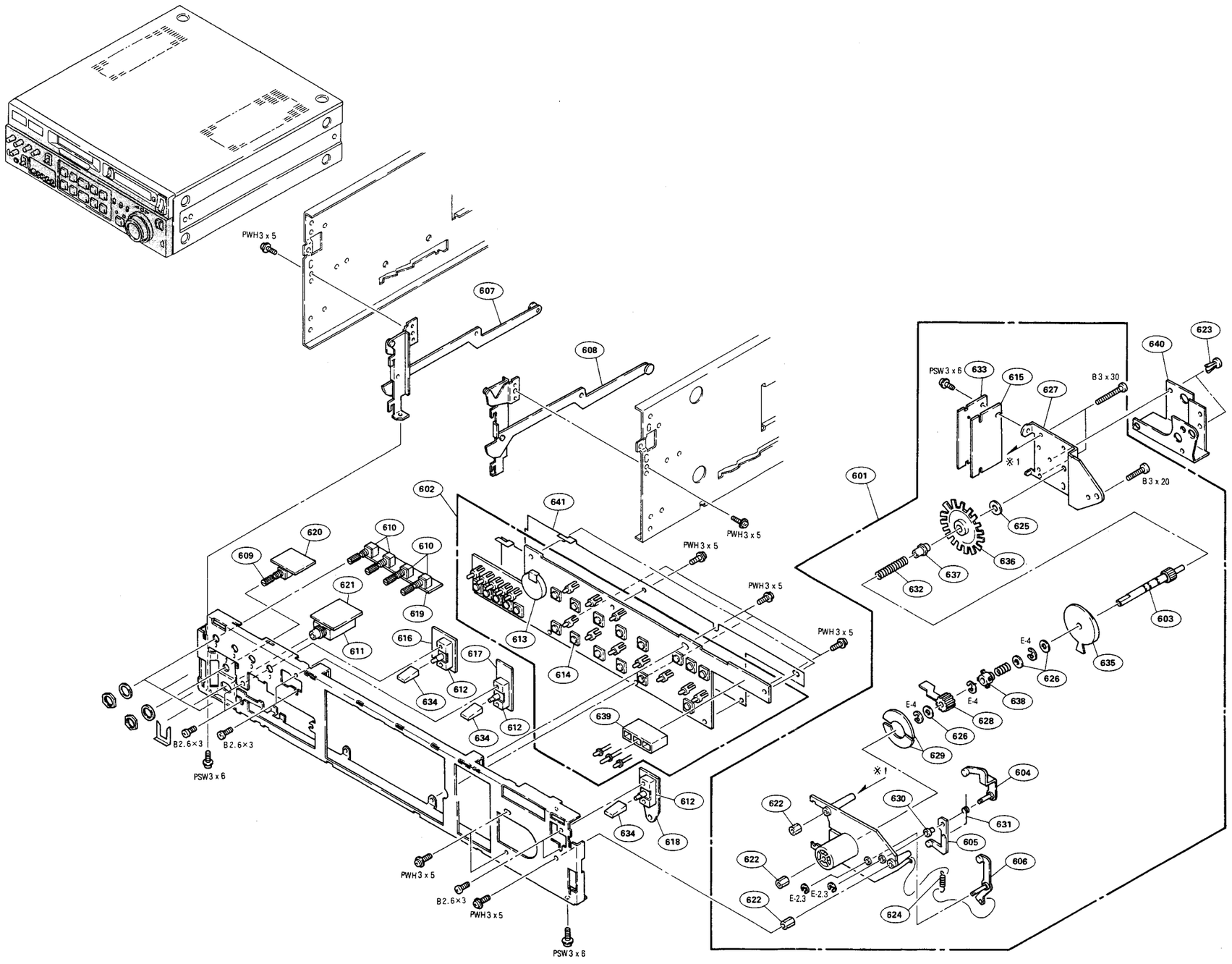

No.	Part No.	SP	Description
601	A-6734-238-C	s	DIAL BLOCK ASSY, SERCH
602	A-8271-230-A	o	MOUNTED CIRCUIT BOARD, KY-217
603	X-3717-226-1	o	SHAFT SUB ASSY, MAIN
604	X-3717-227-1	o	ARM (RIGHT) ASSY, S10
605	X-3717-228-1	o	ARM (LEFT) ASSY, S10
606	X-3717-229-1	o	ARM ASSY, RETURN
607	X-3738-903-1	o	HINGE (LEFT) ASSY
608	X-3738-904-1	o	HINGE (RIGHT) ASSY
609	1-237-703-11	s	RES, VAR, CARBON 2k/2k
610	1-238-483-11	s	RES, VAR, CARBON 5k
611	1-507-854-00	s	JACK, LARGE TYPE
612	1-516-961-00	s	SWITCH, LEVER SLIDE
613	1-528-229-11	o	BATTERY, LITHIUM (CR-2450)
614	1-552-539-00	s	SWITCH, KEY BOARD
615	1-622-638-11	o	PRINTED CIRCUIT BOARD, PTC-32
616	1-642-870-11	o	PRINTED CIRCUIT BOARD, SW-466
617	1-642-871-11	o	PRINTED CIRCUIT BOARD, SW-540
618	1-642-872-11	o	PRINTED CIRCUIT BOARD, SW-543
619	1-642-873-11	o	PRINTED CIRCUIT BOARD, VR-122
620	1-642-874-11	o	PRINTED CIRCUIT BOARD, VR-130
621	1-642-875-11	o	PRINTED CIRCUIT BOARD, HP-52
622	2-280-622-11	o	SUPPORT (M3), HEXAGON
623	3-531-576-01	s	RIVET
624	3-639-371-00	s	SPRING, TENSION
625	3-662-048-00	s	WASHER, BRACKET
626	3-701-443-21	s	WASHER, 5DIA.
627	3-717-315-01	o	PLATE, BOTTOM, SD
628	3-717-316-03	o	GUIDE, LOCK IN
629	3-717-317-01	o	PLATE, CLUTCH
630	3-717-318-01	o	BEARING, S10
631	3-717-319-01	o	SPRING, TORSION
632	3-717-320-01	o	SPRING, COMPRESSION
633	3-717-321-01	o	PROTECTOR, PTC
634	3-717-382-01	s	KNOB, LEVER SW
635	3-717-417-01	o	CAM
636	3-717-418-01	o	PLATE
637	3-717-553-01	o	BEARING, SD
638	3-717-546-02	o	GUIDE, LOCK OUT
639	3-718-657-01	o	HOLDER, LED
640	3-718-771-01	o	COVER (U), SD
641	3-947-152-01	o	PROTECTOR, KY

Connector Panel Block

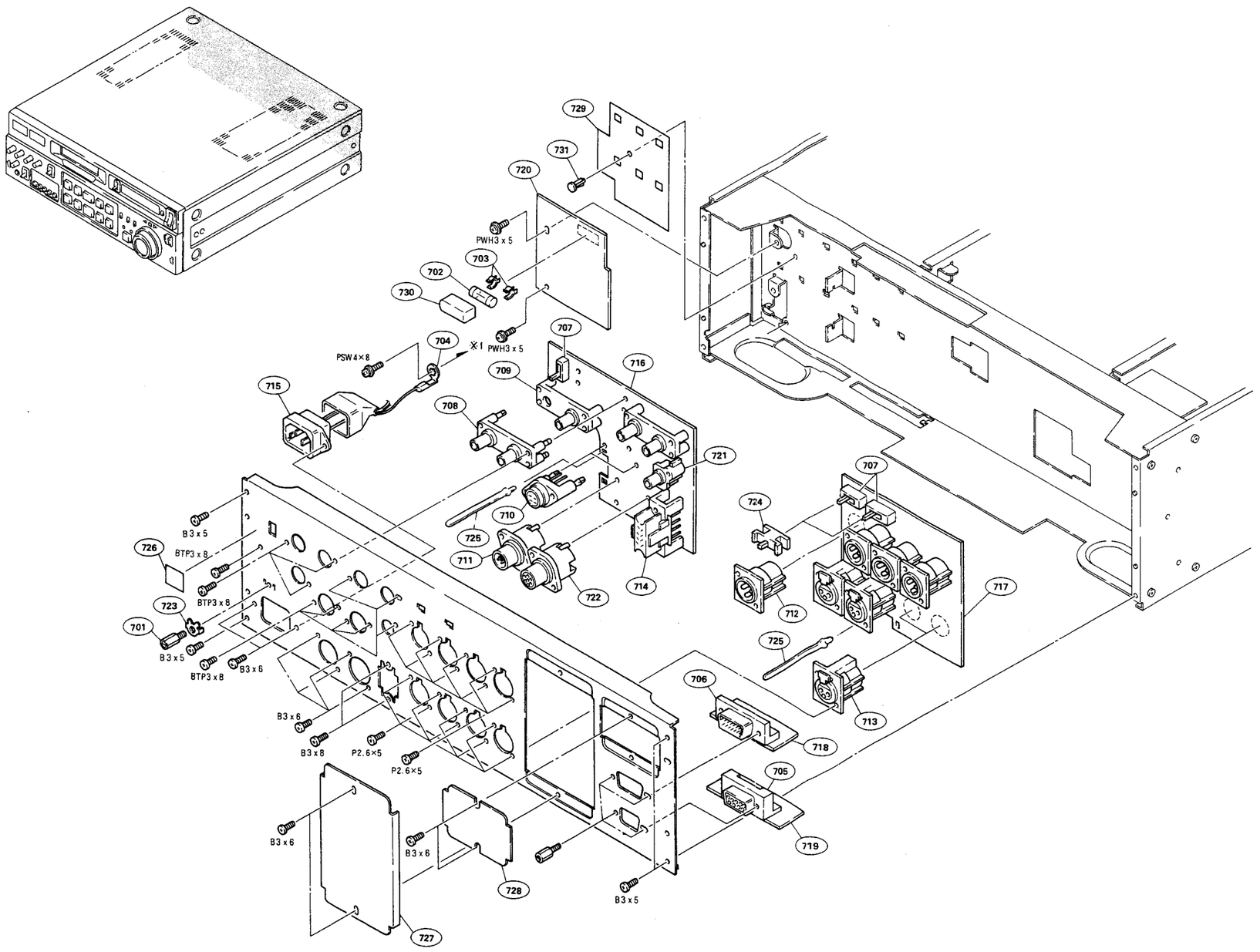

No.	Part No.	SP	Description
701	X-2068-004-0	s	TERMINAL ASSY
702 ⚠	1-532-743-11	s	FUSE, GLASS TUBE 2A
703	1-533-189-11	s	HOLDER, FUSE
704	1-535-316-11	s	TERMINAL, GROUND (M4)
705	1-563-770-11	s	SOCKET, D-SUB CONNECTOR 9P
706	1-566-319-11	o	PLUG, D-SUB CONNECTOR 15P
707	1-570-145-11	s	SWITCH, SLIDE
708	1-573-582-11	s	CONNECTOR, BNC (RECEPTACLE)
709	1-573-583-11	s	CONNECTOR, BNC (RECEPTACLE)
710	1-573-590-12	s	CONNECTOR, (S) TERMINAL 4P
711	1-573-591-11	s	CONNECTOR, (R-F)
712	1-573-594-11	s	CONNECTOR, XLR TYPE 3P
713	1-573-593-11	s	CONNECTOR, XLR TYPE 3P
714	1-573-602-11	s	CONNECTOR, (DIP TYPE) 8P
715 ⚠	1-580-375-11	s	INLET 3P
716	1-642-967-11	o	PRINTED CIRCUIT BOARD, CP-176
717	1-642-968-11	o	PRINTED CIRCUIT BOARD, CP-177
718	1-642-970-11	o	PRINTED CIRCUIT BOARD, RM-101
719	1-642-971-11	o	PRINTED CIRCUIT BOARD, RM-122
720	1-643-013-11	o	PRINTED CIRCUIT BOARD, AC-121
721	1-691-273-11	s	JACK, PIN 1P
722	1-695-195-11	s	CONNECTOR (ROUND TYPE) 7P
723	2-068-008-00	s	WASHER
724	3-171-450-01	o	ADAPTOR, SW
725	3-683-631-01	o	CLAMP
726	3-703-848-01	o	LABEL (N), SUB CAUTION
727	3-733-627-01	o	COVER, IF
728	3-947-113-01	o	PANEL, TC BLANK
729	3-947-116-01	o	INSULATOR, AC
730	4-601-472-00	o	COVER, FUSE
731	4-818-403-00	s	RIVET, NYLON

Main Shassis Block

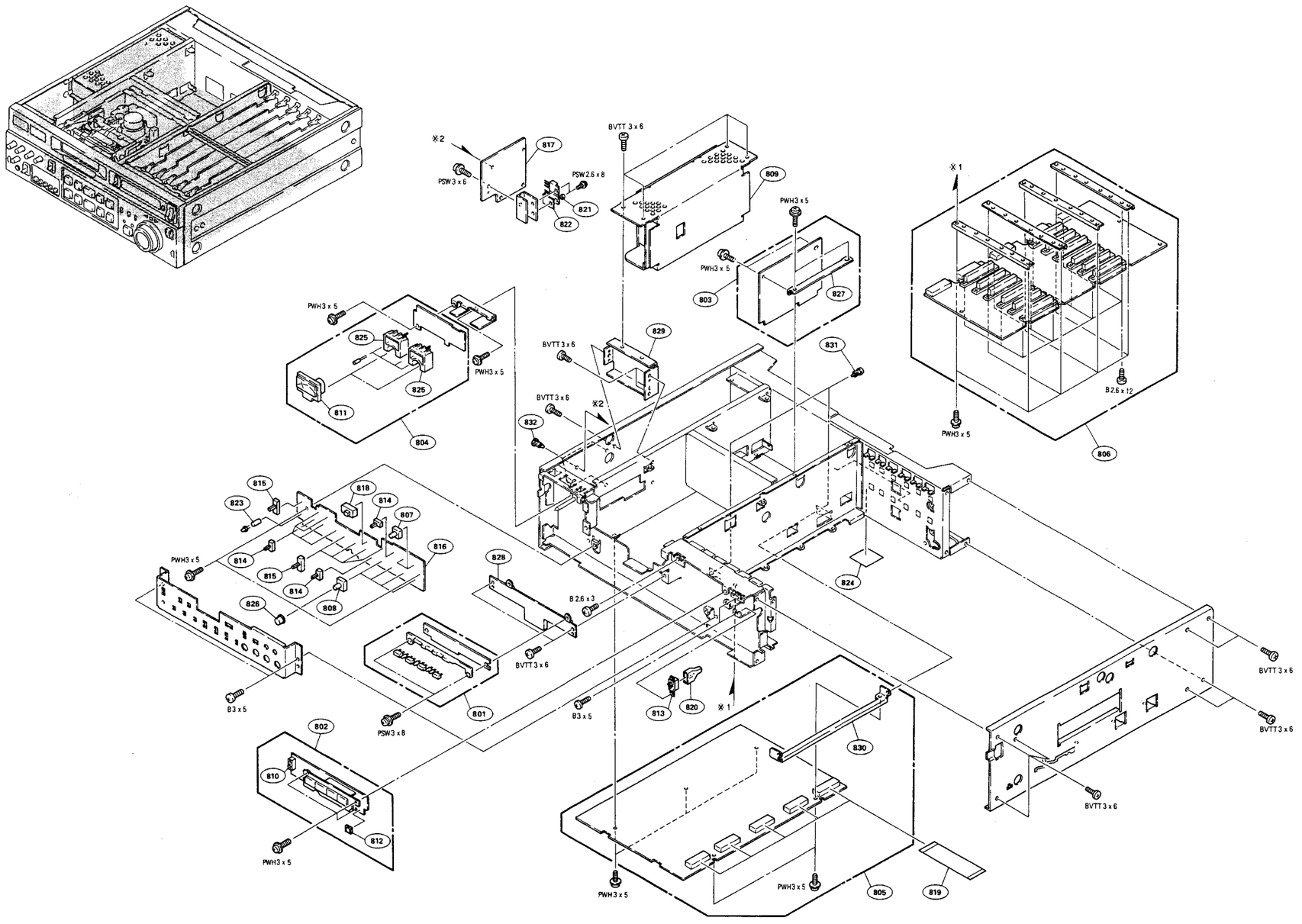

No.	Part No.	SP	Description
801	A-7061-770-A	o	MOUNTED CIRCUIT BOARD, LP-52
802	A-7061-772-A	o	MOUNTED CIRCUIT BOARD, DD-12
803	A-8271-222-A	o	MOUNTED CIRCUIT BOARD, AA-57
804	A-8271-224-A	o	MOUNTED CIRCUIT BOARD, MT-57A
805	A-8271-231-A	o	MOUNTED CIRCUIT BOARD, SST-2
806	A-8276-261-A	o	MOUNTED CIRCUIT BOARD, MB-356
807	1-241-856-11	s	RES, VAR, CARBON 5k
808	1-241-918-11	s	RES, VAR, CARBON 5k
809 ⚠	1-413-731-11	s	SWITCHING REGULATOR
810	1-516-995-00	s	SWITCH, LEVER SLIDE
811	1-520-506-11	s	METER, AUDIO LEVEL
812	1-552-539-00	s	SWITCH, KEY BOARD
813 ⚠	1-570-117-41	s	SWITCH, ROCKER (AC POWER)
814	1-570-145-11	s	SWITCH, SLIDE
815	1-572-374-11	s	SWITCH, SLIDE
816	1-642-952-11	o	PRINTED CIRCUIT BOARD, SW-467
817	1-643-015-11	o	PRINTED CIRCUIT BOARD, DC-57
818	1-692-077-11	s	SWITCH, SLIDE
819	1-696-147-11	s	CORE, FLAT TYPE (26 CORE)
820	2-269-962-00	s	COVER, SWITCH
821	2-371-561-00	s	BUSHING (P), INSULATING
822	3-334-236-01	s	INSULATOR, TO-220
823	3-697-607-01	o	HOLDER (SU), LED
824	3-703-848-01	o	LABEL (N), SUB CAUTION
825	3-738-923-01	o	HOLDER, LED
826	3-947-117-01	s	KNOB, VOL
827	3-947-125-01	o	BRACKET, AA
828	3-947-131-01	o	BRACKET, LP
829	3-947-132-01	o	BRACKET, SW'G REG
830	3-947-144-01	o	BRACKET, SST
831	4-818-403-00	s	RIVET, NYLON
832	4-912-181-11	o	SUPPORT, PC

Ornamental Panel Block

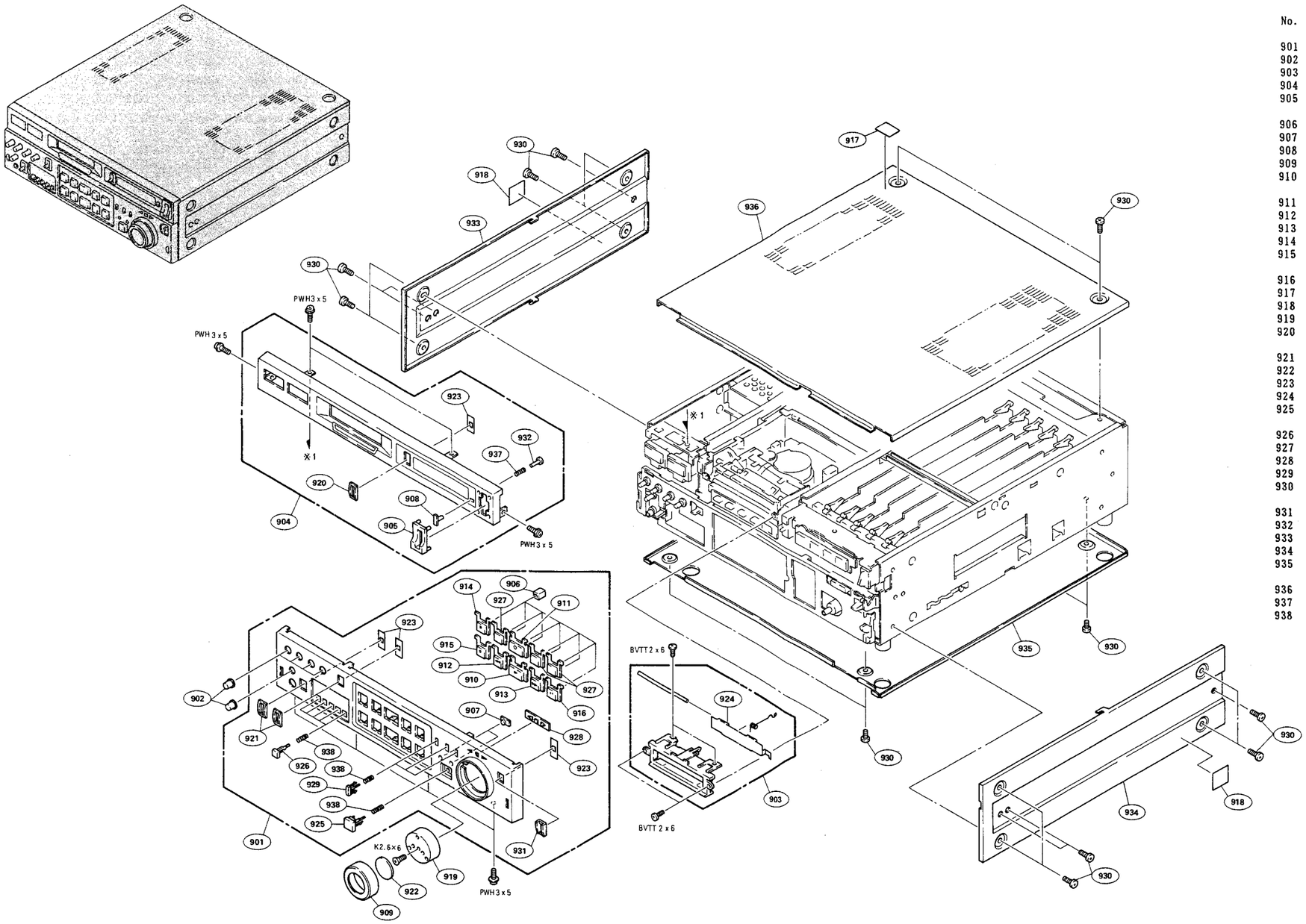

No.	Part No.	SP	Description
901	A-8262-334-A	o	PANEL BLOCK ASSY, KEY
902	X-3668-075-0	s	KNOB ASSY, CONTROL
903	X-3738-905-1	o	WINDOW ASSY
904	X-3941-440-1	o	PANEL ASSY, FRONT
905	2-251-642-00	s	GUARD, POWER SWITCH
906	2-284-744-00	o	CUSHION (B), KEY
907	3-648-149-41	o	COVER (DIA.4), LAMP
908	3-668-008-02	s	PUSH BUTTON (3x5)
909	3-668-012-03	s	RUBBER, DIAL KNOB
910	3-672-782-02	s	KEY TOP (A)
911	3-672-782-11	s	KEY TOP (A)
912	3-672-783-02	s	KEY TOP (B)
913	3-672-783-12	s	KEY TOP (B)
914	3-672-783-32	s	KEY TOP (B)
915	3-672-783-42	s	KEY TOP (B)
916	3-672-783-52	s	KEY TOP (B)
917	3-703-845-01	o	LABEL (N) (U/C), MAIN CAUTION
918	3-703-848-01	o	LABEL (N), SUB CAUTION
919	3-717-370-01	o	KNOB, DIAL
920	3-717-374-01	o	FRAME (23x12), ORNAMENTAL, SW
921	3-717-375-01	o	FRAME (18x12), ORNAMENTAL, SW
922	3-717-557-01	o	PLATE, KNOB
923	3-717-613-01	o	PLATE, ORNAMENTAL, LSW
924	3-721-101-73	o	DOOR
925	3-733-602-01	s	KEY TOP (S)
926	3-733-603-01	s	KEY TOP
927	3-733-604-01	s	KEY TOP (PC)
928	3-733-605-01	s	COVER, LED
929	3-733-606-01	s	PUSH BUTTON (5x9)
930	3-733-690-01	s	+B4x6 (CU, NI)
931	3-738-907-01	s	FRAME, ORNAMENTAL, LEVER SW
932	3-738-912-01	s	PIN (9), PUSH BUTTON
933	3-738-925-03	o	PLATE (LEFT), SIDE
934	3-738-926-03	o	PLATE (RIGHT), SIDE
935	3-947-146-01	o	PLATE, BOTTOM
936	3-947-148-01	o	PLATE, TOP
937	4-309-349-00	s	SPRING, COIL
938	4-866-613-00	s	SPRING, COMPRESSION

Card Rack Block

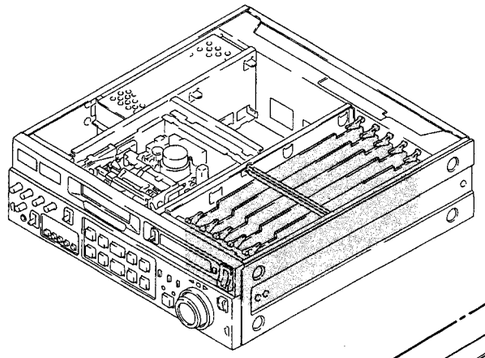

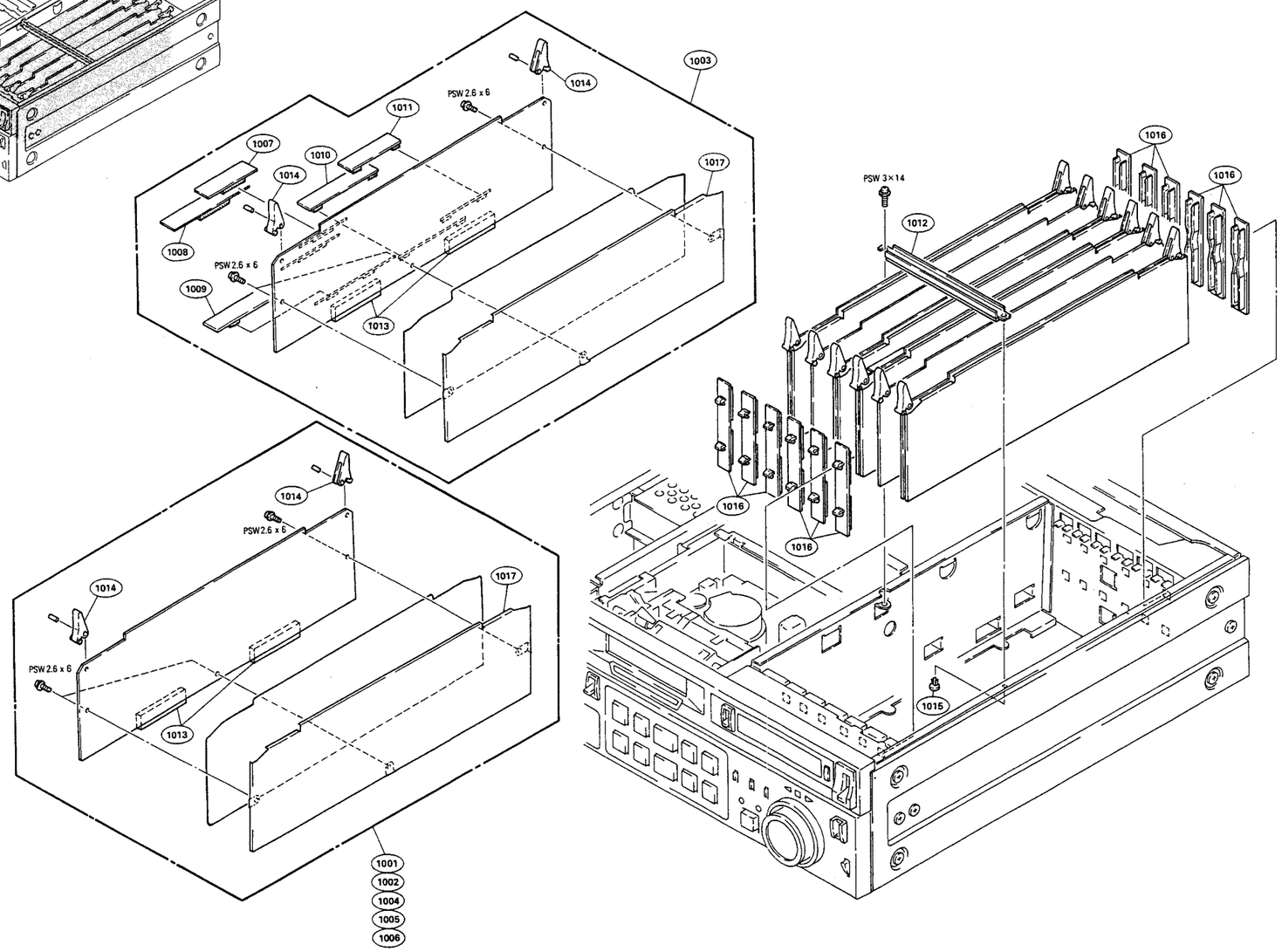

No.	Part No.	SP	Description
1001	A-8271-223-A	o	MOUNTED CIRCUIT BOARD, AU-156
1002	A-8271-225-A	o	MOUNTED CIRCUIT BOARD, MD-81
1003	A-8271-226-A	o	MOUNTED CIRCUIT BOARD, DM-87
1004	A-8271-227-A	o	MOUNTED CIRCUIT BOARD, AU-157
1005	A-8271-228-A	o	MOUNTED CIRCUIT BOARD, VA-111
1006	A-8271-229-A	o	MOUNTED CIRCUIT BOARD, TBC-21
1007	A-8276-243-A	o	MOUNTED CIRCUIT BOARD, CR-40
1008	A-8276-244-A	o	MOUNTED CIRCUIT BOARD, CR-41
1009	A-8276-245-A	o	MOUNTED CIRCUIT BOARD, FL-129
1010	A-8276-246-A	o	MOUNTED CIRCUIT BOARD, FL-130
1011	A-8276-247-A	o	MOUNTED CIRCUIT BOARD, FL-131
1012	X-3941-436-2	o	RETAINER ASSY, PCB
1013	1-573-782-21	o	CONNECTOR, PC BOARD (PLUG) 60P
1014	2-251-622-11	s	LEVER PC, BOARD
1015	3-531-576-21	s	RIVET
1016	3-177-768-01	s	SUPPORT, PC BOARD
1017	3-947-151-01	o	PLATE, SHIELD, CARD

14-3. ELECTRICAL PARTS LIST

AA-57 BOARD

Ref. No. or Q'ty	Part No.	SP	Description
1pc	A-8271-222-A	o	MOUNTED CIRCUIT BOARD, AA-57
1pc	3-947-125-01	o	BRACKET, AA
2pcs	7-682-903-01	s	SCREW +PWH 3X5
C1	1-124-119-00	s	ELECT 330uF 20% 16V
C2	1-124-119-00	s	ELECT 330uF 20% 16V
C3	1-124-360-00	s	ELECT 1000uF 20% 16V
C4	1-124-360-00	s	ELECT 1000uF 20% 16V
C5	1-162-927-11	s	CERAMIC, CHIP 100PF 5% 50V
C6	1-162-995-11	s	CERAMIC, CHIP 0.022uF 50V
C7	1-162-995-11	s	CERAMIC, CHIP 0.022uF 50V
C8	1-162-927-11	s	CERAMIC, CHIP 100PF 5% 50V
C9	1-124-119-00	s	ELECT 330uF 20% 16V
C51	1-124-119-00	s	ELECT 330uF 20% 16V
C52	1-124-119-00	s	ELECT 330uF 20% 16V
C53	1-124-119-00	s	ELECT 330uF 20% 16V
C54	1-124-119-00	s	ELECT 330uF 20% 16V
C55	1-162-927-11	s	CERAMIC, CHIP 100PF 5% 50V
C56	1-162-995-11	s	CERAMIC, CHIP 0.022uF 50V
C57	1-162-995-11	s	CERAMIC, CHIP 0.022uF 50V
C58	1-162-927-11	s	CERAMIC, CHIP 100PF 5% 50V
C59	1-124-119-00	s	ELECT 330uF 20% 16V
C101	1-124-910-11	s	ELECT 47uF 20% 50V
C102	1-124-910-11	s	ELECT 47uF 20% 50V
C103	1-162-964-11	s	CERAMIC, CHIP 0.001uF 10% 50V
C104	1-162-921-11	s	CERAMIC, CHIP 33PF 5% 50V
C105	1-162-921-11	s	CERAMIC, CHIP 33PF 5% 50V
C201	1-124-910-11	s	ELECT 47uF 20% 50V
C202	1-124-910-11	s	ELECT 47uF 20% 50V
C203	1-162-964-11	s	CERAMIC, CHIP 0.001uF 10% 50V
C204	1-162-921-11	s	CERAMIC, CHIP 33PF 5% 50V
C205	1-162-921-11	s	CERAMIC, CHIP 33PF 5% 50V
C301	1-162-964-11	s	CERAMIC, CHIP 0.001uF 10% 50V
C303	1-162-921-11	s	CERAMIC, CHIP 33PF 5% 50V
C304	1-162-921-11	s	CERAMIC, CHIP 33PF 5% 50V
C305	1-124-910-11	s	ELECT 47uF 20% 50V
C306	1-124-910-11	s	ELECT 47uF 20% 50V
C401	1-162-964-11	s	CERAMIC, CHIP 0.001uF 10% 50V
C403	1-162-921-11	s	CERAMIC, CHIP 33PF 5% 50V
C404	1-162-921-11	s	CERAMIC, CHIP 33PF 5% 50V
C405	1-124-910-11	s	ELECT 47uF 20% 50V
C406	1-124-910-11	s	ELECT 47uF 20% 50V
C501	1-162-919-11	s	CERAMIC, CHIP 22PF 5% 50V
C601	1-162-919-11	s	CERAMIC, CHIP 22PF 5% 50V
C701	1-162-919-11	s	CERAMIC, CHIP 22PF 5% 50V
C801	1-162-919-11	s	CERAMIC, CHIP 22PF 5% 50V
CN201	1-506-468-11	s	CONNECTOR 3P, MALE
CN202	1-506-468-11	s	CONNECTOR 3P, MALE
CN203	1-506-468-11	s	CONNECTOR 3P, MALE
CN204	1-506-468-11	s	CONNECTOR 3P, MALE
CN205	1-506-474-11	s	CONNECTOR 9P, MALE
CN206	1-506-469-11	s	CONNECTOR 4P, MALE
CN207	1-506-469-11	s	CONNECTOR 4P, MALE
CN208	1-506-475-11	s	CONNECTOR 10P, MALE
CN209	1-506-469-11	s	CONNECTOR 4P, MALE
CN210	1-506-469-11	s	CONNECTOR 4P, MALE
D101	8-719-106-35	s	DIODE RD8.2M-B2
D102	8-719-106-35	s	DIODE RD8.2M-B2
D103	8-719-106-35	s	DIODE RD8.2M-B2

(AA-57 BOARD)

Ref. No. or Q'ty	Part No.	SP	Description
D104	8-719-106-35	s	DIODE RD8.2M-B2
D201	8-719-106-35	s	DIODE RD8.2M-B2
D202	8-719-106-35	s	DIODE RD8.2M-B2
D203	8-719-106-35	s	DIODE RD8.2M-B2
D204	8-719-106-35	s	DIODE RD8.2M-B2
D301	8-719-106-35	s	DIODE RD8.2M-B2
D302	8-719-106-35	s	DIODE RD8.2M-B2
D303	8-719-106-35	s	DIODE RD8.2M-B2
D304	8-719-106-35	s	DIODE RD8.2M-B2
D401	8-719-106-35	s	DIODE RD8.2M-B2
D402	8-719-106-35	s	DIODE RD8.2M-B2
D403	8-719-106-35	s	DIODE RD8.2M-B2
D404	8-719-106-35	s	DIODE RD8.2M-B2
D501	8-719-800-76	s	DIODE 1SS226
D601	8-719-800-76	s	DIODE 1SS226
D701	8-719-800-76	s	DIODE 1SS226
D801	8-719-800-76	s	DIODE 1SS226
IC101	8-759-106-02	s	IC UPC4570G2
IC102	8-759-106-02	s	IC UPC4570G2
IC103	8-759-009-07	s	IC MC14053BF
IC201	8-759-106-02	s	IC UPC4570G2
IC202	8-759-106-02	s	IC UPC4570G2
IC203	8-759-009-07	s	IC MC14053BF
IC301	8-759-106-02	s	IC UPC4570G2
IC302	8-759-106-02	s	IC UPC4570G2
IC401	8-759-106-02	s	IC UPC4570G2
IC601	8-759-745-64	s	IC NJM4560M
IC801	8-759-745-64	s	IC NJM4560M
Q1	8-729-807-16	s	TRANSISTOR 2SD1621
Q2	8-729-805-25	s	TRANSISTOR 2SB1121-S
Q51	8-729-807-16	s	TRANSISTOR 2SD1621
Q52	8-729-805-25	s	TRANSISTOR 2SB1121-S
Q501	8-729-301-57	s	TRANSISTOR 2SB841
Q502	8-729-301-60	s	TRANSISTOR 2SD1081
Q503	8-729-202-38	s	TRANSISTOR 2SC3326N
Q601	8-729-301-57	s	TRANSISTOR 2SB841
Q602	8-729-301-60	s	TRANSISTOR 2SD1081
Q603	8-729-202-38	s	TRANSISTOR 2SC3326N
Q701	8-729-301-57	s	TRANSISTOR 2SB841
Q702	8-729-301-60	s	TRANSISTOR 2SD1081
Q703	8-729-202-38	s	TRANSISTOR 2SC3326N
Q801	8-729-301-57	s	TRANSISTOR 2SB841
Q802	8-729-301-60	s	TRANSISTOR 2SD1081
Q803	8-729-202-38	s	TRANSISTOR 2SC3326N
R1	1-216-824-11	s	METAL, CHIP 1.8K 5% 1/16W
R2	1-216-824-11	s	METAL, CHIP 1.8K 5% 1/16W
R3	1-216-824-11	s	METAL, CHIP 1.8K 5% 1/16W
R4	1-216-824-11	s	METAL, CHIP 1.8K 5% 1/16W
R5	1-216-824-11	s	METAL, CHIP 1.8K 5% 1/16W
R6	1-216-824-11	s	METAL, CHIP 1.8K 5% 1/16W
R7	1-216-824-11	s	METAL, CHIP 1.8K 5% 1/16W
R8	1-216-824-11	s	METAL, CHIP 1.8K 5% 1/16W
R9	1-216-824-11	s	METAL, CHIP 1.8K 5% 1/16W
R10	1-216-824-11	s	METAL, CHIP 1.8K 5% 1/16W
R51	1-216-824-11	s	METAL, CHIP 1.8K 5% 1/16W
R52	1-216-824-11	s	METAL, CHIP 1.8K 5% 1/16W
R53	1-216-824-11	s	METAL, CHIP 1.8K 5% 1/16W

(AA-57 BOARD)

Ref. No. or Q'ty	Part No.	SP	Description
R54	1-216-824-11	s	METAL, CHIP 1.8K 5% 1/16W
R55	1-216-824-11	s	METAL, CHIP 1.8K 5% 1/16W
R56	1-216-824-11	s	METAL, CHIP 1.8K 5% 1/16W
R102	1-216-833-11	s	METAL, CHIP 10K 5% 1/16W
R104	1-218-272-11	s	METAL, CHIP 5.1K 5% 1/16W
R105	1-218-272-11	s	METAL, CHIP 5.1K 5% 1/16W
R106	1-218-675-11	s	METAL, CHIP 200 0.50% 1/16W
R110	1-218-740-11	s	METAL, CHIP 100K 0.50% 1/16W
R111	1-218-740-11	s	METAL, CHIP 100K 0.50% 1/16W
R112	1-216-816-11	s	METAL, CHIP 390 5% 1/16W
R113	1-218-727-11	s	METAL, CHIP 30K 0.50% 1/16W
R114	1-218-670-11	s	METAL, CHIP 120 0.50% 1/16W
R115	1-218-723-11	s	METAL, CHIP 20K 0.50% 1/16W
R116	1-218-723-11	s	METAL, CHIP 20K 0.50% 1/16W
R117	1-218-708-11	s	METAL, CHIP 4.7K 0.50% 1/16W
R118	1-218-708-11	s	METAL, CHIP 4.7K 0.50% 1/16W
R119	1-218-708-11	s	METAL, CHIP 4.7K 0.50% 1/16W
R120	1-218-708-11	s	METAL, CHIP 4.7K 0.50% 1/16W
R121	1-218-708-11	s	METAL, CHIP 4.7K 0.50% 1/16W
R202	1-216-833-11	s	METAL, CHIP 10K 5% 1/16W
R203	1-218-272-11	s	METAL, CHIP 5.1K 5% 1/16W
R204	1-218-272-11	s	METAL, CHIP 5.1K 5% 1/16W
R206	1-218-675-11	s	METAL, CHIP 200 0.50% 1/16W
R210	1-218-740-11	s	METAL, CHIP 100K 0.50% 1/16W
R211	1-218-740-11	s	METAL, CHIP 100K 0.50% 1/16W
R212	1-216-816-11	s	METAL, CHIP 390 5% 1/16W
R213	1-218-727-11	s	METAL, CHIP 30K 0.50% 1/16W
R214	1-218-670-11	s	METAL, CHIP 120 0.50% 1/16W
R215	1-218-723-11	s	METAL, CHIP 20K 0.50% 1/16W
R216	1-218-723-11	s	METAL, CHIP 20K 0.50% 1/16W
R217	1-218-708-11	s	METAL, CHIP 4.7K 0.50% 1/16W
R218	1-218-708-11	s	METAL, CHIP 4.7K 0.50% 1/16W
R219	1-218-708-11	s	METAL, CHIP 4.7K 0.50% 1/16W
R220	1-218-708-11	s	METAL, CHIP 4.7K 0.50% 1/16W
R221	1-218-708-11	s	METAL, CHIP 4.7K 0.50% 1/16W
R301	1-218-272-11	s	METAL, CHIP 5.1K 5% 1/16W
R302	1-218-272-11	s	METAL, CHIP 5.1K 5% 1/16W
R303	1-218-675-11	s	METAL, CHIP 200 0.50% 1/16W
R307	1-218-740-11	s	METAL, CHIP 100K 0.50% 1/16W
R308	1-218-740-11	s	METAL, CHIP 100K 0.50% 1/16W
R309	1-216-804-11	s	METAL, CHIP 39 5% 1/16W
R310	1-216-865-11	s	METAL, CHIP 3K 5% 1/16W
R311	1-216-798-11	s	METAL, CHIP 12 5% 1/16W
R312	1-218-271-11	s	METAL, CHIP 2K 5% 1/16W
R313	1-218-271-11	s	METAL, CHIP 2K 5% 1/16W
R314	1-218-708-11	s	METAL, CHIP 4.7K 0.50% 1/16W
R315	1-218-708-11	s	METAL, CHIP 4.7K 0.50% 1/16W
R316	1-218-708-11	s	METAL, CHIP 4.7K 0.50% 1/16W
R317	1-218-708-11	s	METAL, CHIP 4.7K 0.50% 1/16W
R321	1-218-708-11	s	METAL, CHIP 4.7K 0.50% 1/16W
R401	1-218-272-11	s	METAL, CHIP 5.1K 5% 1/16W
R402	1-218-272-11	s	METAL, CHIP 5.1K 5% 1/16W
R403	1-218-675-11	s	METAL, CHIP 200 0.50% 1/16W
R407	1-218-740-11	s	METAL, CHIP 100K 0.50% 1/16W
R408	1-218-740-11	s	METAL, CHIP 100K 0.50% 1/16W
R409	1-216-804-11	s	METAL, CHIP 39 5% 1/16W
R410	1-216-865-11	s	METAL, CHIP 3K 5% 1/16W
R411	1-216-798-11	s	METAL, CHIP 12 5% 1/16W
R412	1-218-271-11	s	METAL, CHIP 2K 5% 1/16W

(AA-57 BOARD)

Ref. No. or Q'ty	Part No.	SP	Description
R413	1-218-271-11	s	METAL, CHIP 2K 5% 1/16W
R414	1-218-708-11	s	METAL, CHIP 4.7K 0.50% 1/16W
R415	1-218-708-11	s	METAL, CHIP 4.7K 0.50% 1/16W
R416	1-218-708-11	s	METAL, CHIP 4.7K 0.50% 1/16W
R417	1-218-708-11	s	METAL, CHIP 4.7K 0.50% 1/16W
R421	1-218-708-11	s	METAL, CHIP 4.7K 0.50% 1/16W
R501	1-216-821-11	s	METAL, CHIP 1K 5% 1/16W
R502	1-216-830-11	s	METAL, CHIP 5.6K 5% 1/16W
R503	1-216-833-11	s	METAL, CHIP 10K 5% 1/16W
R504	1-216-865-11	s	METAL, CHIP 3K 5% 1/16W
R505	1-216-797-11	s	METAL, CHIP 10 5% 1/16W
R506	1-216-821-11	s	METAL, CHIP 1K 5% 1/16W
R507	1-216-821-11	s	METAL, CHIP 1K 5% 1/16W
R508	1-216-798-11	s	METAL, CHIP 12 5% 1/16W
R509	1-216-798-11	s	METAL, CHIP 12 5% 1/16W
R510	1-216-798-11	s	METAL, CHIP 12 5% 1/16W
R511	1-216-798-11	s	METAL, CHIP 12 5% 1/16W
R512	1-216-798-11	s	METAL, CHIP 12 5% 1/16W
R513	1-216-798-11	s	METAL, CHIP 12 5% 1/16W
R514	1-216-798-11	s	METAL, CHIP 12 5% 1/16W
R515	1-216-798-11	s	METAL, CHIP 12 5% 1/16W
R516	1-216-798-11	s	METAL, CHIP 12 5% 1/16W
R517	1-216-798-11	s	METAL, CHIP 12 5% 1/16W
R518	1-216-799-11	s	METAL, CHIP 15 5% 1/16W
R519	1-216-799-11	s	METAL, CHIP 15 5% 1/16W
R520	1-216-799-11	s	METAL, CHIP 15 5% 1/16W
R521	1-216-821-11	s	METAL, CHIP 1K 5% 1/16W
R601	1-216-821-11	s	METAL, CHIP 1K 5% 1/16W
R602	1-216-830-11	s	METAL, CHIP 5.6K 5% 1/16W
R603	1-216-833-11	s	METAL, CHIP 10K 5% 1/16W
R604	1-216-865-11	s	METAL, CHIP 3K 5% 1/16W
R605	1-216-797-11	s	METAL, CHIP 10 5% 1/16W
R606	1-216-821-11	s	METAL, CHIP 1K 5% 1/16W
R607	1-216-821-11	s	METAL, CHIP 1K 5% 1/16W
R608	1-216-798-11	s	METAL, CHIP 12 5% 1/16W
R609	1-216-798-11	s	METAL, CHIP 12 5% 1/16W
R610	1-216-798-11	s	METAL, CHIP 12 5% 1/16W
R611	1-216-798-11	s	METAL, CHIP 12 5% 1/16W
R612	1-216-798-11	s	METAL, CHIP 12 5% 1/16W
R613	1-216-798-11	s	METAL, CHIP 12 5% 1/16W
R614	1-216-798-11	s	METAL, CHIP 12 5% 1/16W
R615	1-216-798-11	s	METAL, CHIP 12 5% 1/16W
R616	1-216-798-11	s	METAL, CHIP 12 5% 1/16W
R617	1-216-798-11	s	METAL, CHIP 12 5% 1/16W
R618	1-216-799-11	s	METAL, CHIP 15 5% 1/16W
R619	1-216-799-11	s	METAL, CHIP 15 5% 1/16W
R620	1-216-799-11	s	METAL, CHIP 15 5% 1/16W
R621	1-216-821-11	s	METAL, CHIP 1K 5% 1/16W
R701	1-216-821-11	s	METAL, CHIP 1K 5% 1/16W
R702	1-216-830-11	s	METAL, CHIP 5.6K 5% 1/16W
R703	1-216-833-11	s	METAL, CHIP 10K 5% 1/16W
R704	1-216-865-11	s	METAL, CHIP 3K 5% 1/16W
R705	1-216-797-11	s	METAL, CHIP 10 5% 1/16W
R706	1-216-821-11	s	METAL, CHIP 1K 5% 1/16W
R707	1-216-821-11	s	METAL, CHIP 1K 5% 1/16W
R708	1-216-798-11	s	METAL, CHIP 12 5% 1/16W
R709	1-216-798-11	s	METAL, CHIP 12 5% 1/16W
R710	1-216-798-11	s	METAL, CHIP 12 5% 1/16W
R711	1-216-798-11	s	METAL, CHIP 12 5% 1/16W

(AA-57 BOARD)

Ref. No. or Q'ty	Part No.	SP	Description
R712	1-216-798-11	s	METAL, CHIP 12 5% 1/16W
R713	1-216-798-11	s	METAL, CHIP 12 5% 1/16W
R714	1-216-798-11	s	METAL, CHIP 12 5% 1/16W
R715	1-216-798-11	s	METAL, CHIP 12 5% 1/16W
R716	1-216-798-11	s	METAL, CHIP 12 5% 1/16W
R717	1-216-798-11	s	METAL, CHIP 12 5% 1/16W
R718	1-216-799-11	s	METAL, CHIP 15 5% 1/16W
R719	1-216-799-11	s	METAL, CHIP 15 5% 1/16W
R720	1-216-799-11	s	METAL, CHIP 15 5% 1/16W
R721	1-216-821-11	s	METAL, CHIP 1K 5% 1/16W
R801	1-216-821-11	s	METAL, CHIP 1K 5% 1/16W
R802	1-216-830-11	s	METAL, CHIP 5.6K 5% 1/16W
R803	1-216-833-11	s	METAL, CHIP 10K 5% 1/16W
R804	1-216-865-11	s	METAL, CHIP 3K 5% 1/16W
R805	1-216-797-11	s	METAL, CHIP 10 5% 1/16W
R806	1-216-821-11	s	METAL, CHIP 1K 5% 1/16W
R807	1-216-821-11	s	METAL, CHIP 1K 5% 1/16W
R808	1-216-798-11	s	METAL, CHIP 12 5% 1/16W
R809	1-216-798-11	s	METAL, CHIP 12 5% 1/16W
R810	1-216-798-11	s	METAL, CHIP 12 5% 1/16W
R811	1-216-798-11	s	METAL, CHIP 12 5% 1/16W
R812	1-216-798-11	s	METAL, CHIP 12 5% 1/16W
R813	1-216-798-11	s	METAL, CHIP 12 5% 1/16W
R814	1-216-798-11	s	METAL, CHIP 12 5% 1/16W
R815	1-216-798-11	s	METAL, CHIP 12 5% 1/16W
R816	1-216-798-11	s	METAL, CHIP 12 5% 1/16W
R817	1-216-798-11	s	METAL, CHIP 12 5% 1/16W
R818	1-216-799-11	s	METAL, CHIP 15 5% 1/16W
R819	1-216-799-11	s	METAL, CHIP 15 5% 1/16W
R820	1-216-799-11	s	METAL, CHIP 15 5% 1/16W
R821	1-216-821-11	s	METAL, CHIP 1K 5% 1/16W
T501	1-427-586-11	s	TRANSFORMER, INPUT/OUTPUT
T601	1-427-586-11	s	TRANSFORMER, INPUT/OUTPUT
T701	1-427-586-11	s	TRANSFORMER, INPUT/OUTPUT
T801	1-427-586-11	s	TRANSFORMER, INPUT/OUTPUT

AC-121 BOARD

Ref. No. or Q'ty	Part No.	SP	Description
1pc	1-643-013-11	o	PRINTED CIRCUIT BOARD, AC-121
CN911	⚠1-565-395-11	o	CONNECTOR VH 3P, MALE
CN912	⚠1-564-321-00	o	CONNECTOR 2P, MALE
F1	1-533-189-11	s	HOLDER, FUSE
F2	1-533-189-11	s	HOLDER, FUSE

AU-156 BOARD

Ref. No. or Q'ty	Part No.	SP	Description
1pc	A-8271-223-A	o	MOUNTED CIRCUIT BOARD, AU-156
2pcs	2-251-622-11	s	LEVER, PC BOARD
C1	1-164-227-11	s	CERAMIC, CHIP 0.022uF 10% 25V
C2	1-164-227-11	s	CERAMIC, CHIP 0.022uF 10% 25V
C3	1-124-477-11	s	ELECT 47uF 20% 25V
C4	1-126-101-11	s	ELECT 100uF 20% 16V
C5	1-162-921-11	s	CERAMIC, CHIP 33PF 5% 50V
C6	1-124-477-11	s	ELECT 47uF 20% 25V
C7	1-164-227-11	s	CERAMIC, CHIP 0.022uF 10% 25V
C8	1-164-227-11	s	CERAMIC, CHIP 0.022uF 10% 25V
C9	1-124-477-11	s	ELECT 47uF 20% 25V
C10	1-124-927-11	s	ELECT 4.7uF 20% 100V
C50	1-163-035-00	s	CERAMIC, CHIP 0.047uF 50V
C51	1-164-227-11	s	CERAMIC, CHIP 0.022uF 10% 25V
C52	1-124-477-11	s	ELECT 47uF 20% 25V
C53	1-164-227-11	s	CERAMIC, CHIP 0.022uF 10% 25V
C54	1-164-227-11	s	CERAMIC, CHIP 0.022uF 10% 25V
C55	1-164-227-11	s	CERAMIC, CHIP 0.022uF 10% 25V
C56	1-124-477-11	s	ELECT 47uF 20% 25V
C57	1-164-227-11	s	CERAMIC, CHIP 0.022uF 10% 25V
C58	1-164-227-11	s	CERAMIC, CHIP 0.022uF 10% 25V
C59	1-126-101-11	s	ELECT 100uF 20% 16V
C60	1-162-919-11	s	CERAMIC, CHIP 22PF 5% 50V
C61	1-126-101-11	s	ELECT 100uF 20% 16V
C64	1-124-927-11	s	ELECT 4.7uF 20% 100V
C65	1-164-227-11	s	CERAMIC, CHIP 0.022uF 10% 25V
C101	1-164-227-11	s	CERAMIC, CHIP 0.022uF 10% 25V
C102	1-164-227-11	s	CERAMIC, CHIP 0.022uF 10% 25V
C103	1-124-477-11	s	ELECT 47uF 20% 25V
C104	1-126-101-11	s	ELECT 100uF 20% 16V
C105	1-162-921-11	s	CERAMIC, CHIP 33PF 5% 50V
C106	1-124-477-11	s	ELECT 47uF 20% 25V
C107	1-164-227-11	s	CERAMIC, CHIP 0.022uF 10% 25V
C108	1-164-227-11	s	CERAMIC, CHIP 0.022uF 10% 25V
C109	1-124-477-11	s	ELECT 47uF 20% 25V
C110	1-124-927-11	s	ELECT 4.7uF 20% 100V
C150	1-163-035-00	s	CERAMIC, CHIP 0.047uF 50V
C152	1-124-477-11	s	ELECT 47uF 20% 25V
C153	1-164-227-11	s	CERAMIC, CHIP 0.022uF 10% 25V
C154	1-164-227-11	s	CERAMIC, CHIP 0.022uF 10% 25V
C155	1-164-227-11	s	CERAMIC, CHIP 0.022uF 10% 25V
C156	1-164-227-11	s	CERAMIC, CHIP 0.022uF 10% 25V
C157	1-124-477-11	s	ELECT 47uF 20% 25V
C160	1-162-919-11	s	CERAMIC, CHIP 22PF 5% 50V
C164	1-124-477-11	s	ELECT 47uF 20% 25V
C201	1-164-227-11	s	CERAMIC, CHIP 0.022uF 10% 25V
C202	1-164-227-11	s	CERAMIC, CHIP 0.022uF 10% 25V
C203	1-124-477-11	s	ELECT 47uF 20% 25V
C204	1-126-101-11	s	ELECT 100uF 20% 16V
C205	1-162-921-11	s	CERAMIC, CHIP 33PF 5% 50V
C206	1-124-477-11	s	ELECT 47uF 20% 25V
C207	1-164-227-11	s	CERAMIC, CHIP 0.022uF 10% 25V
C208	1-164-227-11	s	CERAMIC, CHIP 0.022uF 10% 25V
C209	1-124-477-11	s	ELECT 47uF 20% 25V
C250	1-163-035-00	s	CERAMIC, CHIP 0.047uF 50V
C252	1-124-477-11	s	ELECT 47uF 20% 25V
C254	1-164-227-11	s	CERAMIC, CHIP 0.022uF 10% 25V
C255	1-164-227-11	s	CERAMIC, CHIP 0.022uF 10% 25V

(AU-156 BOARD)

Ref. No. or Q'ty	Part No.	SP	Description
C260	1-162-919-11	s	CERAMIC, CHIP 22PF 5% 50V
C261	1-164-227-11	s	CERAMIC, CHIP 0.022uF 10% 25V
C262	1-164-227-11	s	CERAMIC, CHIP 0.022uF 10% 25V
C263	1-124-907-11	s	ELECT 10uF 20% 50V
C264	1-124-927-11	s	ELECT 4.7uF 20% 100V
C301	1-164-227-11	s	CERAMIC, CHIP 0.022uF 10% 25V
C302	1-164-227-11	s	CERAMIC, CHIP 0.022uF 10% 25V
C303	1-124-477-11	s	ELECT 47uF 20% 25V
C304	1-126-101-11	s	ELECT 100uF 20% 16V
C305	1-162-921-11	s	CERAMIC, CHIP 33PF 5% 50V
C306	1-124-477-11	s	ELECT 47uF 20% 25V
C307	1-164-227-11	s	CERAMIC, CHIP 0.022uF 10% 25V
C308	1-164-227-11	s	CERAMIC, CHIP 0.022uF 10% 25V
C309	1-124-477-11	s	ELECT 47uF 20% 25V
C350	1-163-035-00	s	CERAMIC, CHIP 0.047uF 50V
C352	1-124-477-11	s	ELECT 47uF 20% 25V
C360	1-162-919-11	s	CERAMIC, CHIP 22PF 5% 50V
C364	1-124-477-11	s	ELECT 47uF 20% 25V
C501	1-124-464-11	s	ELECT 0.22uF 20% 50V
C502	1-124-927-11	s	ELECT 4.7uF 20% 100V
C503	1-162-970-11	s	CERAMIC, CHIP 0.01uF 10% 25V
C504	1-126-101-11	s	ELECT 100uF 20% 16V
C505	1-163-125-00	s	CERAMIC, CHIP 220PF 5% 50V
C506	1-162-970-11	s	CERAMIC, CHIP 0.01uF 10% 25V
C507	1-126-101-11	s	ELECT 100uF 20% 16V
C508	1-164-373-11	s	CERAMIC, CHIP 0.033uF 25V
C509	1-163-038-00	s	CERAMIC, CHIP 0.1uF 25V
C510	1-162-967-11	s	CERAMIC, CHIP 0.0033uF 10% 50V
C511	1-126-101-11	s	ELECT 100uF 20% 16V
C512	1-162-970-11	s	CERAMIC, CHIP 0.01uF 10% 25V
C513	1-164-227-11	s	CERAMIC, CHIP 0.022uF 10% 25V
C514	1-162-923-11	s	CERAMIC, CHIP 47PF 5% 50V
C515	1-162-970-11	s	CERAMIC, CHIP 0.01uF 10% 25V
C517	1-162-927-11	s	CERAMIC, CHIP 100PF 5% 50V
C518	1-162-969-11	s	CERAMIC, CHIP 0.0068uF 10% 25V
C519	1-162-970-11	s	CERAMIC, CHIP 0.01uF 10% 25V
C520	1-162-965-11	s	CERAMIC, CHIP 0.0015uF 10% 50V
C521	1-124-903-11	s	ELECT 1uF 20% 50V
C523	1-162-966-11	s	CERAMIC, CHIP 0.0022uF 10% 50V
C524	1-135-159-21	s	TANTALUM, CHIP 10uF 10% 20V
C525	1-135-091-00	s	TANTALUN, CHIP 1uF 10% 16V
C526	1-135-210-11	s	TANTALUM, CHIP 4.7uF 20% 10V
C527	1-163-125-00	s	CERAMIC, CHIP 220PF 5% 50V
C528	1-124-902-00	s	ELECT 0.47uF 20% 50V
C531	1-124-902-00	s	ELECT 0.47uF 20% 50V
C601	1-124-464-11	s	ELECT 0.22uF 20% 50V
C602	1-124-927-11	s	ELECT 4.7uF 20% 100V
C603	1-162-970-11	s	CERAMIC, CHIP 0.01uF 10% 25V
C604	1-126-101-11	s	ELECT 100uF 20% 16V
C605	1-163-125-00	s	CERAMIC, CHIP 220PF 5% 50V
C606	1-162-970-11	s	CERAMIC, CHIP 0.01uF 10% 25V
C607	1-126-101-11	s	ELECT 100uF 20% 16V
C608	1-164-373-11	s	CERAMIC, CHIP 0.033uF 25V
C609	1-163-038-00	s	CERAMIC, CHIP 0.1uF 25V
C610	1-162-967-11	s	CERAMIC, CHIP 0.0033uF 10% 50V
C611	1-126-101-11	s	ELECT 100uF 20% 16V
C613	1-164-227-11	s	CERAMIC, CHIP 0.022uF 10% 25V
C614	1-162-923-11	s	CERAMIC, CHIP 47PF 5% 50V
C615	1-162-970-11	s	CERAMIC, CHIP 0.01uF 10% 25V

(AU-156 BOARD)

Ref. No. or Q'ty	Part No.	SP	Description
C617	1-162-963-11	s	CERAMIC, CHIP 680PF 10% 50V
C618	1-162-969-11	s	CERAMIC, CHIP 0.0068uF 10% 25V
C619	1-162-970-11	s	CERAMIC, CHIP 0.01uF 10% 25V
C620	1-162-965-11	s	CERAMIC, CHIP 0.0015uF 10% 50V
C621	1-124-903-11	s	ELECT 1uF 20% 50V
C622	1-124-902-00	s	ELECT 0.47uF 20% 50V
C623	1-162-966-11	s	CERAMIC, CHIP 0.0022uF 10% 50V
C624	1-135-159-21	s	TANTALUM, CHIP 10uF 10% 20V
C625	1-135-091-00	s	TANTALUN, CHIP 1uF 10% 16V
C626	1-135-210-11	s	TANTALUM, CHIP 4.7uF 20% 10V
C627	1-163-125-00	s	CERAMIC, CHIP 220PF 5% 50V
C628	1-124-902-00	s	ELECT 0.47uF 20% 50V
C629	1-124-482-11	s	ELECT 33uF 20% 35V
C630	1-135-210-11	s	TANTALUM, CHIP 4.7uF 20% 10V
C631	1-162-970-11	s	CERAMIC, CHIP 0.01uF 10% 25V
C701	1-124-903-11	s	ELECT 1uF 20% 50V
C702	1-126-101-11	s	ELECT 100uF 20% 16V
C703	1-162-970-11	s	CERAMIC, CHIP 0.01uF 10% 25V
C704	1-126-101-11	s	ELECT 100uF 20% 16V
C705	1-126-101-11	s	ELECT 100uF 20% 16V
C706	1-162-970-11	s	CERAMIC, CHIP 0.01uF 10% 25V
C707	1-162-970-11	s	CERAMIC, CHIP 0.01uF 10% 25V
C708	1-162-970-11	s	CERAMIC, CHIP 0.01uF 10% 25V
C709	1-162-970-11	s	CERAMIC, CHIP 0.01uF 10% 25V
C710	1-162-970-11	s	CERAMIC, CHIP 0.01uF 10% 25V
C711	1-162-970-11	s	CERAMIC, CHIP 0.01uF 10% 25V
C712	1-164-346-11	s	CERAMIC 1uF 16V
C713	1-162-926-11	s	CERAMIC, CHIP 82PF 5% 50V
C714	1-126-233-11	s	ELECT 22uF 20% 50V
C715	1-124-903-11	s	ELECT 1uF 20% 50V
C716	1-124-903-11	s	ELECT 1uF 20% 50V
C717	1-124-925-11	s	ELECT 2.2uF 20% 100V
C718	1-124-903-11	s	ELECT 1uF 20% 50V
C719	1-126-233-11	s	ELECT 22uF 20% 50V
C720	1-124-903-11	s	ELECT 1uF 20% 50V
C721	1-124-903-11	s	ELECT 1uF 20% 50V
C722	1-124-925-11	s	ELECT 2.2uF 20% 100V
C723	1-162-921-11	s	CERAMIC, CHIP 33PF 5% 50V
C724	1-162-920-11	s	CERAMIC, CHIP 27PF 5% 50V
C725	1-163-038-00	s	CERAMIC, CHIP 0.1uF 25V
C727	1-162-965-11	s	CERAMIC, CHIP 0.0015uF 10% 50V
C728	1-162-970-11	s	CERAMIC, CHIP 0.01uF 10% 25V
C730	1-135-091-00	s	TANTALUN, CHIP 1uF 10% 16V
C731	1-135-091-00	s	TANTALUN, CHIP 1uF 10% 16V
C732	1-124-903-11	s	ELECT 1uF 20% 50V
C733	1-124-464-11	s	ELECT 0.22uF 20% 50V
C734	1-164-227-11	s	CERAMIC, CHIP 0.022uF 10% 25V
C735	1-164-227-11	s	CERAMIC, CHIP 0.022uF 10% 25V
C801	1-124-477-11	s	ELECT 47uF 20% 25V
C802	1-124-907-11	s	ELECT 10uF 20% 50V
C803	1-164-227-11	s	CERAMIC, CHIP 0.022uF 10% 25V
C804	1-164-227-11	s	CERAMIC, CHIP 0.022uF 10% 25V
C805	1-164-227-11	s	CERAMIC, CHIP 0.022uF 10% 25V
C806	1-164-227-11	s	CERAMIC, CHIP 0.022uF 10% 25V
C851	1-124-477-11	s	ELECT 47uF 20% 25V
C852	1-124-907-11	s	ELECT 10uF 20% 50V
C860	1-162-970-11	s	CERAMIC, CHIP 0.01uF 10% 25V
C861	1-162-970-11	s	CERAMIC, CHIP 0.01uF 10% 25V
C901	1-126-101-11	s	ELECT 100uF 20% 16V

(AU-156 BOARD)

Ref. No. or Q'ty	Part No.	SP	Description
C902	1-124-120-11	s	ELECT 220uF 20% 25V
C951	1-124-477-11	s	ELECT 47uF 20% 25V
C952	1-164-227-11	s	CERAMIC, CHIP 0.022uF 10% 25V
C953	1-124-477-11	s	ELECT 47uF 20% 25V
C954	1-124-477-11	s	ELECT 47uF 20% 25V
C955	1-164-227-11	s	CERAMIC, CHIP 0.022uF 10% 25V
C956	1-124-120-11	s	ELECT 220uF 20% 25V
C957	1-124-120-11	s	ELECT 220uF 20% 25V
C1001	1-162-970-11	s	CERAMIC, CHIP 0.01uF 10% 25V
C1002	1-162-970-11	s	CERAMIC, CHIP 0.01uF 10% 25V
C1003	1-162-970-11	s	CERAMIC, CHIP 0.01uF 10% 25V
C1004	1-164-677-11	s	CERAMIC, CHIP 0.033uF 10% 16V
C1005	1-164-677-11	s	CERAMIC, CHIP 0.033uF 10% 16V
C1006	1-162-970-11	s	CERAMIC, CHIP 0.01uF 10% 25V
C1007	1-162-970-11	s	CERAMIC, CHIP 0.01uF 10% 25V
CN221	1-506-488-11	s	CONNECTOR, 9P, MALE
CN222	1-506-489-11	s	CONNECTOR, 10P, MALE
CN603	1-573-782-21	o	CONNECTOR, PHEC 60P, MALE
CN604	1-573-782-21	o	CONNECTOR, PHEC 60P, MALE
D1	8-719-941-86	s	DIODE DAN202U
D2	8-719-941-09	s	DIODE DAP202U
D50	8-719-941-09	s	DIODE DAP202U
D51	8-719-941-09	s	DIODE DAP202U
D52	8-719-941-09	s	DIODE DAP202U
D53	8-719-941-86	s	DIODE DAN202U
D54	8-719-941-86	s	DIODE DAN202U
D55	8-719-941-86	s	DIODE DAN202U
D101	8-719-941-86	s	DIODE DAN202U
D102	8-719-941-09	s	DIODE DAP202U
D150	8-719-941-09	s	DIODE DAP202U
D151	8-719-941-09	s	DIODE DAP202U
D153	8-719-941-09	s	DIODE DAP202U
D201	8-719-941-86	s	DIODE DAN202U
D202	8-719-941-09	s	DIODE DAP202U
D301	8-719-941-86	s	DIODE DAN202U
D302	8-719-941-09	s	DIODE DAP202U
D750	8-719-941-09	s	DIODE DAP202U
D751	8-719-941-09	s	DIODE DAP202U
D801	8-719-941-09	s	DIODE DAP202U
D802	8-719-941-86	s	DIODE DAN202U
D901	8-719-200-02	s	DIODE 10E2
D902	8-719-200-02	s	DIODE 10E2
D903	8-719-941-09	s	DIODE DAP202U
FL701	1-236-550-11	s	FILTER, BAND PASS 15MHz
FL702	1-236-551-11	s	FILTER, BAND PASS 17MHz
IC1	8-759-603-27	s	IC M5201FP
IC2	8-759-701-97	s	IC NJM4562M
IC50	8-759-701-97	s	IC NJM4562M
IC51	8-759-603-27	s	IC M5201FP
IC52	8-759-700-45	s	IC NJM4556M-A
IC53	8-759-009-06	s	IC MC14052BF
IC101	8-759-603-27	s	IC M5201FP
IC102	8-759-701-97	s	IC NJM4562M
IC150	8-759-701-97	s	IC NJM4562M
IC151	8-759-603-27	s	IC M5201FP
IC201	8-759-603-27	s	IC M5201FP
IC202	8-759-701-97	s	IC NJM4562M
IC250	8-759-701-97	s	IC NJM4562M

(AU-156 BOARD)

Ref. No. or Q'ty	Part No.	SP	Description
IC251	8-759-009-06	s	IC MC14052BF
IC301	8-759-603-27	s	IC M5201FP
IC302	8-759-701-97	s	IC NJM4562M
IC401	8-759-009-03	s	IC MC14049UBF
IC501	8-759-823-19	s	IC CXA1488R
IC601	8-759-823-19	s	IC CXA1488R
IC701	8-759-823-21	s	IC CXA1536Q
IC702	8-759-927-46	s	IC SN74HC00NS
IC703	8-759-925-74	s	IC TC74HC04NS
IC704	8-759-925-72	s	IC SN74HC02NS
IC705	8-759-708-05	s	IC NJM78L05A
IC751	8-759-239-58	s	IC TC74HC221AF
IC801	8-759-603-27	s	IC M5201FP
IC851	8-759-603-27	s	IC M5201FP
IC1001	8-759-923-63	s	IC TL592PS
IC1002	8-759-700-43	s	IC NJM4558M
L860	1-412-533-11	s	INDUCTOR 47uH
L900	1-412-533-11	s	INDUCTOR 47uH
L950	1-412-533-11	s	INDUCTOR 47uH
L952	1-408-785-21	s	INDUCTOR, CHIP 47UH
Q1	8-729-117-32	s	TRANSISTOR 2SC4177
Q2	8-729-117-32	s	TRANSISTOR 2SC4177
Q3	8-729-117-32	s	TRANSISTOR 2SC4177
Q50	8-729-209-07	s	TRANSISTOR 2SC4213-B
Q51	8-729-209-07	s	TRANSISTOR 2SC4213-B
Q54	8-729-209-07	s	TRANSISTOR 2SC4213-B
Q101	8-729-117-32	s	TRANSISTOR 2SC4177
Q102	8-729-117-32	s	TRANSISTOR 2SC4177
Q103	8-729-117-32	s	TRANSISTOR 2SC4177
Q150	8-729-209-07	s	TRANSISTOR 2SC4213-B
Q151	8-729-209-07	s	TRANSISTOR 2SC4213-B
Q154	8-729-209-07	s	TRANSISTOR 2SC4213-B
Q155	8-729-905-18	s	TRANSISTOR DTC144EU
Q201	8-729-117-32	s	TRANSISTOR 2SC4177
Q202	8-729-117-32	s	TRANSISTOR 2SC4177
Q203	8-729-117-32	s	TRANSISTOR 2SC4177
Q250	8-729-209-07	s	TRANSISTOR 2SC4213-B
Q251	8-729-209-07	s	TRANSISTOR 2SC4213-B
Q255	8-729-209-07	s	TRANSISTOR 2SC4213-B
Q256	8-729-905-18	s	TRANSISTOR DTC144EU
Q257	8-729-905-18	s	TRANSISTOR DTC144EU
Q301	8-729-117-32	s	TRANSISTOR 2SC4177
Q302	8-729-117-32	s	TRANSISTOR 2SC4177
Q303	8-729-117-32	s	TRANSISTOR 2SC4177
Q350	8-729-209-07	s	TRANSISTOR 2SC4213-B
Q351	8-729-209-07	s	TRANSISTOR 2SC4213-B
Q602	8-729-117-32	s	TRANSISTOR 2SC4177
Q701	8-729-117-32	s	TRANSISTOR 2SC4177
Q702	8-729-117-32	s	TRANSISTOR 2SC4177
Q703	8-729-117-32	s	TRANSISTOR 2SC4177
Q704	8-729-117-32	s	TRANSISTOR 2SC4177
Q705	8-729-117-32	s	TRANSISTOR 2SC4177
Q706	8-729-117-32	s	TRANSISTOR 2SC4177
Q707	8-729-117-32	s	TRANSISTOR 2SC4177
Q708	8-729-117-32	s	TRANSISTOR 2SC4177
Q709	8-729-117-32	s	TRANSISTOR 2SC4177
Q710	8-729-117-32	s	TRANSISTOR 2SC4177
Q750	8-729-905-18	s	TRANSISTOR DTC144EU

(AU-156 BOARD)

Ref. No. or Q'ty	Part No.	SP	Description
Q751	8-729-117-16	s	TRANSISTOR 2SA1611-M6
Q752	8-729-117-32	s	TRANSISTOR 2SC4177
Q753	8-729-117-32	s	TRANSISTOR 2SC4177
Q754	8-729-117-16	s	TRANSISTOR 2SA1611-M6
Q755	8-729-117-32	s	TRANSISTOR 2SC4177
Q756	8-729-117-32	s	TRANSISTOR 2SC4177
Q801	8-729-209-07	s	TRANSISTOR 2SC4213-B
Q802	8-729-117-32	s	TRANSISTOR 2SC4177
Q851	8-729-209-07	s	TRANSISTOR 2SC4213-B
Q852	8-729-117-32	s	TRANSISTOR 2SC4177
Q860	8-729-117-32	s	TRANSISTOR 2SC4177
Q901	8-729-117-16	s	TRANSISTOR 2SA1611-M6
Q902	8-729-117-16	s	TRANSISTOR 2SA1611-M6
Q911	8-729-230-49	s	TRANSISTOR 2SC2712-YG
Q912	8-729-216-22	s	TRANSISTOR 2SA1162
Q1001	8-729-120-28	s	TRANSISTOR 2SC1623-L5L6
Q1002	8-729-120-28	s	TRANSISTOR 2SC1623-L5L6
Q1003	8-729-120-28	s	TRANSISTOR 2SC1623-L5L6
R1	1-216-833-11	s	METAL, CHIP 10K 5% 1/16W
R2	1-216-833-11	s	METAL, CHIP 10K 5% 1/16W
R3	1-216-845-11	s	METAL, CHIP 100K 5% 1/16W
R4	1-216-833-11	s	METAL, CHIP 10K 5% 1/16W
R5	1-216-805-11	s	METAL, CHIP 47 5% 1/16W
R6	1-216-849-11	s	METAL, CHIP 220K 5% 1/16W
R7	1-216-809-11	s	METAL, CHIP 100 5% 1/16W
R8	1-216-821-11	s	METAL, CHIP 1K 5% 1/16W
R9	1-216-845-11	s	METAL, CHIP 100K 5% 1/16W
R10	1-216-837-11	s	METAL, CHIP 22K 5% 1/16W
R11	1-216-821-11	s	METAL, CHIP 1K 5% 1/16W
R12	1-216-843-11	s	METAL, CHIP 68K 5% 1/16W
R13	1-216-809-11	s	METAL, CHIP 100 5% 1/16W
R15	1-216-841-11	s	METAL, CHIP 47K 5% 1/16W
R50	1-216-825-11	s	METAL, CHIP 2.2K 5% 1/16W
R51	1-216-833-11	s	METAL, CHIP 10K 5% 1/16W
R52	1-216-833-11	s	METAL, CHIP 10K 5% 1/16W
R53	1-216-830-11	s	METAL, CHIP 5.6K 5% 1/16W
R54	1-216-845-11	s	METAL, CHIP 100K 5% 1/16W
R55	1-216-832-11	s	METAL, CHIP 8.2K 5% 1/16W
R57	1-216-838-11	s	METAL, CHIP 27K 5% 1/16W
R58	1-216-845-11	s	METAL, CHIP 100K 5% 1/16W
R59	1-218-345-11	s	METAL, CHIP 9.1K 5% 1/16W
R60	1-216-828-11	s	METAL, CHIP 3.9K 5% 1/16W
R61	1-216-797-11	s	METAL, CHIP 10 5% 1/16W
R62	1-216-833-11	s	METAL, CHIP 10K 5% 1/16W
R100	1-216-821-11	s	METAL, CHIP 1K 5% 1/16W
R103	1-216-845-11	s	METAL, CHIP 100K 5% 1/16W
R104	1-216-833-11	s	METAL, CHIP 10K 5% 1/16W
R105	1-216-805-11	s	METAL, CHIP 47 5% 1/16W
R106	1-216-849-11	s	METAL, CHIP 220K 5% 1/16W
R107	1-216-809-11	s	METAL, CHIP 100 5% 1/16W
R108	1-216-821-11	s	METAL, CHIP 1K 5% 1/16W
R109	1-216-845-11	s	METAL, CHIP 100K 5% 1/16W
R110	1-216-837-11	s	METAL, CHIP 22K 5% 1/16W
R111	1-216-821-11	s	METAL, CHIP 1K 5% 1/16W
R112	1-216-843-11	s	METAL, CHIP 68K 5% 1/16W
R113	1-216-832-11	s	METAL, CHIP 8.2K 5% 1/16W
R115	1-216-841-11	s	METAL, CHIP 47K 5% 1/16W
R116	1-216-820-11	s	METAL, CHIP 820 5% 1/16W

(AU-156 BOARD)

Ref. No. or Q'ty	Part No.	SP	Description
R150	1-216-825-11	s	METAL, CHIP 2.2K 5% 1/16W
R151	1-216-833-11	s	METAL, CHIP 10K 5% 1/16W
R152	1-216-833-11	s	METAL, CHIP 10K 5% 1/16W
R153	1-216-821-11	s	METAL, CHIP 1K 5% 1/16W
R154	1-216-838-11	s	METAL, CHIP 27K 5% 1/16W
R155	1-216-835-11	s	METAL, CHIP 15K 5% 1/16W
R157	1-216-835-11	s	METAL, CHIP 15K 5% 1/16W
R158	1-216-845-11	s	METAL, CHIP 100K 5% 1/16W
R159	1-218-345-11	s	METAL, CHIP 9.1K 5% 1/16W
R160	1-216-828-11	s	METAL, CHIP 3.9K 5% 1/16W
R161	1-216-797-11	s	METAL, CHIP 10 5% 1/16W
R162	1-216-833-11	s	METAL, CHIP 10K 5% 1/16W
R163	1-216-841-11	s	METAL, CHIP 47K 5% 1/16W
R164	1-216-841-11	s	METAL, CHIP 47K 5% 1/16W
R165	1-216-839-11	s	METAL, CHIP 33K 5% 1/16W
R200	1-216-821-11	s	METAL, CHIP 1K 5% 1/16W
R201	1-216-833-11	s	METAL, CHIP 10K 5% 1/16W
R202	1-216-833-11	s	METAL, CHIP 10K 5% 1/16W
R203	1-216-845-11	s	METAL, CHIP 100K 5% 1/16W
R204	1-216-833-11	s	METAL, CHIP 10K 5% 1/16W
R205	1-216-805-11	s	METAL, CHIP 47 5% 1/16W
R206	1-216-849-11	s	METAL, CHIP 220K 5% 1/16W
R207	1-216-809-11	s	METAL, CHIP 100 5% 1/16W
R208	1-216-821-11	s	METAL, CHIP 1K 5% 1/16W
R209	1-216-845-11	s	METAL, CHIP 100K 5% 1/16W
R210	1-216-837-11	s	METAL, CHIP 22K 5% 1/16W
R211	1-216-821-11	s	METAL, CHIP 1K 5% 1/16W
R212	1-216-843-11	s	METAL, CHIP 68K 5% 1/16W
R213	1-216-809-11	s	METAL, CHIP 100 5% 1/16W
R250	1-216-825-11	s	METAL, CHIP 2.2K 5% 1/16W
R251	1-216-833-11	s	METAL, CHIP 10K 5% 1/16W
R252	1-216-833-11	s	METAL, CHIP 10K 5% 1/16W
R253	1-216-830-11	s	METAL, CHIP 5.6K 5% 1/16W
R254	1-216-845-11	s	METAL, CHIP 100K 5% 1/16W
R255	1-216-832-11	s	METAL, CHIP 8.2K 5% 1/16W
R257	1-216-838-11	s	METAL, CHIP 27K 5% 1/16W
R266	1-216-837-11	s	METAL, CHIP 22K 5% 1/16W
R267	1-216-837-11	s	METAL, CHIP 22K 5% 1/16W
R268	1-216-833-11	s	METAL, CHIP 10K 5% 1/16W
R269	1-216-829-11	s	METAL, CHIP 4.7K 5% 1/16W
R270	1-216-837-11	s	METAL, CHIP 22K 5% 1/16W
R271	1-216-837-11	s	METAL, CHIP 22K 5% 1/16W
R272	1-216-833-11	s	METAL, CHIP 10K 5% 1/16W
R274	1-220-373-11	s	METAL, CHIP 62K 0.50% 1/16W
R275	1-216-821-11	s	METAL, CHIP 1K 5% 1/16W
R276	1-216-833-11	s	METAL, CHIP 10K 5% 1/16W
R277	1-216-845-11	s	METAL, CHIP 100K 5% 1/16W
R303	1-216-845-11	s	METAL, CHIP 100K 5% 1/16W
R304	1-216-833-11	s	METAL, CHIP 10K 5% 1/16W
R305	1-216-805-11	s	METAL, CHIP 47 5% 1/16W
R306	1-216-849-11	s	METAL, CHIP 220K 5% 1/16W
R307	1-216-809-11	s	METAL, CHIP 100 5% 1/16W
R308	1-216-821-11	s	METAL, CHIP 1K 5% 1/16W
R309	1-216-845-11	s	METAL, CHIP 100K 5% 1/16W
R310	1-216-837-11	s	METAL, CHIP 22K 5% 1/16W
R311	1-216-821-11	s	METAL, CHIP 1K 5% 1/16W
R312	1-216-843-11	s	METAL, CHIP 68K 5% 1/16W
R313	1-216-832-11	s	METAL, CHIP 8.2K 5% 1/16W
R316	1-216-820-11	s	METAL, CHIP 820 5% 1/16W

(AU-156 BOARD)

Ref. No. or Q'ty	Part No.	SP	Description
R350	1-216-825-11	s	METAL, CHIP 2.2K 5% 1/16W
R351	1-216-833-11	s	METAL, CHIP 10K 5% 1/16W
R352	1-216-833-11	s	METAL, CHIP 10K 5% 1/16W
R353	1-216-821-11	s	METAL, CHIP 1K 5% 1/16W
R354	1-216-838-11	s	METAL, CHIP 27K 5% 1/16W
R355	1-216-835-11	s	METAL, CHIP 15K 5% 1/16W
R357	1-216-835-11	s	METAL, CHIP 15K 5% 1/16W
R401	1-216-821-11	s	METAL, CHIP 1K 5% 1/16W
R402	1-216-841-11	s	METAL, CHIP 47K 5% 1/16W
R403	1-216-841-11	s	METAL, CHIP 47K 5% 1/16W
R404	1-216-841-11	s	METAL, CHIP 47K 5% 1/16W
R405	1-216-841-11	s	METAL, CHIP 47K 5% 1/16W
R406	1-216-841-11	s	METAL, CHIP 47K 5% 1/16W
R412	1-216-821-11	s	METAL, CHIP 1K 5% 1/16W
R413	1-216-821-11	s	METAL, CHIP 1K 5% 1/16W
R414	1-216-821-11	s	METAL, CHIP 1K 5% 1/16W
R415	1-216-821-11	s	METAL, CHIP 1K 5% 1/16W
R501	1-216-821-11	s	METAL, CHIP 1K 5% 1/16W
R502	1-216-821-11	s	METAL, CHIP 1K 5% 1/16W
R503	1-216-821-11	s	METAL, CHIP 1K 5% 1/16W
R504	1-216-821-11	s	METAL, CHIP 1K 5% 1/16W
R505	1-218-724-11	s	METAL, CHIP 22K 0.50% 1/16W
R506	1-216-857-11	s	METAL, CHIP 1M 5% 1/16W
R507	1-216-821-11	s	METAL, CHIP 1K 5% 1/16W
R508	1-216-821-11	s	METAL, CHIP 1K 5% 1/16W
R510	1-216-832-11	s	METAL, CHIP 8.2K 5% 1/16W
R511	1-216-832-11	s	METAL, CHIP 8.2K 5% 1/16W
R513	1-218-716-11	s	METAL, CHIP 10K 0.50% 1/16W
R514	1-218-883-11	s	METAL, CHIP 33K 0.50 1/16W
R515	1-216-839-11	s	METAL, CHIP 33K 5% 1/16W
R516	1-216-825-11	s	METAL, CHIP 2.2K 5% 1/16W
R517	1-216-837-11	s	METAL, CHIP 22K 5% 1/16W
R518	1-216-827-11	s	METAL, CHIP 3.3K 5% 1/16W
R519	1-216-825-11	s	METAL, CHIP 2.2K 5% 1/16W
R520	1-216-825-11	s	METAL, CHIP 2.2K 5% 1/16W
R521	1-218-732-11	s	METAL, CHIP 47K 0.50% 1/16W
R522	1-218-732-11	s	METAL, CHIP 47K 0.50% 1/16W
R523	1-216-833-11	s	METAL, CHIP 10K 5% 1/16W
R524	1-216-853-11	s	METAL, CHIP 470K 5% 1/16W
R601	1-216-821-11	s	METAL, CHIP 1K 5% 1/16W
R602	1-216-821-11	s	METAL, CHIP 1K 5% 1/16W
R603	1-216-821-11	s	METAL, CHIP 1K 5% 1/16W
R604	1-216-821-11	s	METAL, CHIP 1K 5% 1/16W
R605	1-218-724-11	s	METAL, CHIP 22K 0.50% 1/16W
R606	1-216-857-11	s	METAL, CHIP 1M 5% 1/16W
R607	1-216-821-11	s	METAL, CHIP 1K 5% 1/16W
R608	1-216-821-11	s	METAL, CHIP 1K 5% 1/16W
R610	1-216-832-11	s	METAL, CHIP 8.2K 5% 1/16W
R611	1-216-832-11	s	METAL, CHIP 8.2K 5% 1/16W
R613	1-218-716-11	s	METAL, CHIP 10K 0.50% 1/16W
R614	1-218-883-11	s	METAL, CHIP 33K 0.50 1/16W
R615	1-216-825-11	s	METAL, CHIP 2.2K 5% 1/16W
R616	1-216-825-11	s	METAL, CHIP 2.2K 5% 1/16W
R617	1-216-839-11	s	METAL, CHIP 33K 5% 1/16W
R620	1-216-825-11	s	METAL, CHIP 2.2K 5% 1/16W
R621	1-216-864-11	s	METAL, CHIP 0 5% 1/16W
R622	1-216-864-11	s	METAL, CHIP 0 5% 1/16W
R623	1-216-833-11	s	METAL, CHIP 10K 5% 1/16W
R624	1-216-853-11	s	METAL, CHIP 470K 5% 1/16W

(AU-156 BOARD)

Ref. No. or Q'ty	Part No.	SP	Description
R653	1-216-864-11	s	METAL, CHIP 0 5% 1/16W
R701	1-216-821-11	s	METAL, CHIP 1K 5% 1/16W
R702	1-216-821-11	s	METAL, CHIP 1K 5% 1/16W
R703	1-216-821-11	s	METAL, CHIP 1K 5% 1/16W
R704	1-216-821-11	s	METAL, CHIP 1K 5% 1/16W
R705	1-216-829-11	s	METAL, CHIP 4.7K 5% 1/16W
R706	1-218-698-11	s	METAL, CHIP 1.8K 0.50% 1/16W
R707	1-216-822-11	s	METAL, CHIP 1.2K 5% 1/16W
R708	1-216-834-11	s	METAL, CHIP 12K 5% 1/16W
R709	1-216-820-11	s	METAL, CHIP 820 5% 1/16W
R710	1-216-827-11	s	METAL, CHIP 3.3K 5% 1/16W
R711	1-216-837-11	s	METAL, CHIP 22K 5% 1/16W
R712	1-216-821-11	s	METAL, CHIP 1K 5% 1/16W
R713	1-216-817-11	s	METAL, CHIP 470 5% 1/16W
R714	1-218-313-11	s	METAL, CHIP 560 1% 1/16W
R715	1-216-841-11	s	METAL, CHIP 47K 5% 1/16W
R716	1-216-841-11	s	METAL, CHIP 47K 5% 1/16W
R717	1-216-841-11	s	METAL, CHIP 47K 5% 1/16W
R718	1-216-829-11	s	METAL, CHIP 4.7K 5% 1/16W
R719	1-216-829-11	s	METAL, CHIP 4.7K 5% 1/16W
R720	1-216-841-11	s	METAL, CHIP 47K 5% 1/16W
R721	1-216-821-11	s	METAL, CHIP 1K 5% 1/16W
R722	1-216-821-11	s	METAL, CHIP 1K 5% 1/16W
R723	1-216-841-11	s	METAL, CHIP 47K 5% 1/16W
R724	1-216-833-11	s	METAL, CHIP 10K 5% 1/16W
R725	1-216-833-11	s	METAL, CHIP 10K 5% 1/16W
R727	1-216-833-11	s	METAL, CHIP 10K 5% 1/16W
R728	1-216-857-11	s	METAL, CHIP 1M 5% 1/16W
R729	1-216-825-11	s	METAL, CHIP 2.2K 5% 1/16W
R732	1-216-829-11	s	METAL, CHIP 4.7K 5% 1/16W
R733	1-216-821-11	s	METAL, CHIP 1K 5% 1/16W
R734	1-216-821-11	s	METAL, CHIP 1K 5% 1/16W
R735	1-216-825-11	s	METAL, CHIP 2.2K 5% 1/16W
R736	1-218-732-11	s	METAL, CHIP 47K 0.50% 1/16W
R737	1-218-732-11	s	METAL, CHIP 47K 0.50% 1/16W
R744	1-216-864-11	s	METAL, CHIP 0 5% 1/16W
R745	1-216-864-11	s	METAL, CHIP 0 5% 1/16W
R746	1-216-837-11	s	METAL, CHIP 22K 5% 1/16W
R750	1-216-853-11	s	METAL, CHIP 470K 5% 1/16W
R751	1-216-833-11	s	METAL, CHIP 10K 5% 1/16W
R752	1-216-827-11	s	METAL, CHIP 3.3K 5% 1/16W
R753	1-216-821-11	s	METAL, CHIP 1K 5% 1/16W
R754	1-216-829-11	s	METAL, CHIP 4.7K 5% 1/16W
R755	1-216-839-11	s	METAL, CHIP 33K 5% 1/16W
R756	1-216-835-11	s	METAL, CHIP 15K 5% 1/16W
R757	1-216-821-11	s	METAL, CHIP 1K 5% 1/16W
R758	1-216-821-11	s	METAL, CHIP 1K 5% 1/16W
R759	1-216-829-11	s	METAL, CHIP 4.7K 5% 1/16W
R760	1-216-839-11	s	METAL, CHIP 33K 5% 1/16W
R761	1-216-835-11	s	METAL, CHIP 15K 5% 1/16W
R762	1-216-821-11	s	METAL, CHIP 1K 5% 1/16W
R763	1-216-864-11	s	METAL, CHIP 0 5% 1/16W
R764	1-216-829-11	s	METAL, CHIP 4.7K 5% 1/16W
R800	1-216-841-11	s	METAL, CHIP 47K 5% 1/16W
R801	1-216-833-11	s	METAL, CHIP 10K 5% 1/16W
R802	1-216-829-11	s	METAL, CHIP 4.7K 5% 1/16W
R803	1-216-797-11	s	METAL, CHIP 10 5% 1/16W
R804	1-216-825-11	s	METAL, CHIP 2.2K 5% 1/16W
R805	1-216-823-11	s	METAL, CHIP 1.5K 5% 1/16W

(AU-156 BOARD)

Ref. No. or Q'ty	Part No.	SP	Description
R806	1-216-833-11	s	METAL, CHIP 10K 5% 1/16W
R807	1-216-837-11	s	METAL, CHIP 22K 5% 1/16W
R808	1-216-829-11	s	METAL, CHIP 4.7K 5% 1/16W
R809	1-216-815-11	s	METAL, CHIP 330 5% 1/16W
R850	1-216-841-11	s	METAL, CHIP 47K 5% 1/16W
R851	1-216-833-11	s	METAL, CHIP 10K 5% 1/16W
R852	1-216-829-11	s	METAL, CHIP 4.7K 5% 1/16W
R853	1-216-797-11	s	METAL, CHIP 10 5% 1/16W
R854	1-216-825-11	s	METAL, CHIP 2.2K 5% 1/16W
R855	1-216-823-11	s	METAL, CHIP 1.5K 5% 1/16W
R856	1-216-833-11	s	METAL, CHIP 10K 5% 1/16W
R857	1-216-837-11	s	METAL, CHIP 22K 5% 1/16W
R858	1-216-829-11	s	METAL, CHIP 4.7K 5% 1/16W
R859	1-216-815-11	s	METAL, CHIP 330 5% 1/16W
R860	1-216-837-11	s	METAL, CHIP 22K 5% 1/16W
R861	1-216-837-11	s	METAL, CHIP 22K 5% 1/16W
R862	1-216-821-11	s	METAL, CHIP 1K 5% 1/16W
R901	1-216-845-11	s	METAL, CHIP 100K 5% 1/16W
R902	1-216-834-11	s	METAL, CHIP 12K 5% 1/16W
R903	1-216-837-11	s	METAL, CHIP 22K 5% 1/16W
R904	1-216-845-11	s	METAL, CHIP 100K 5% 1/16W
R905	1-216-837-11	s	METAL, CHIP 22K 5% 1/16W
R906	1-216-837-11	s	METAL, CHIP 22K 5% 1/16W
R927	1-216-821-11	s	METAL, CHIP 1K 5% 1/16W
R928	1-216-821-11	s	METAL, CHIP 1K 5% 1/16W
R1001	1-216-841-11	s	METAL, CHIP 47K 5% 1/16W
R1002	1-216-841-11	s	METAL, CHIP 47K 5% 1/16W
R1003	1-216-824-11	s	METAL, CHIP 1.8K 5% 1/16W
R1004	1-216-821-11	s	METAL, CHIP 1K 5% 1/16W
R1005	1-216-833-11	s	METAL, CHIP 10K 5% 1/16W
R1006	1-216-833-11	s	METAL, CHIP 10K 5% 1/16W
R1007	1-216-833-11	s	METAL, CHIP 10K 5% 1/16W
R1008	1-216-833-11	s	METAL, CHIP 10K 5% 1/16W
R1009	1-216-833-11	s	METAL, CHIP 10K 5% 1/16W
R1010	1-216-833-11	s	METAL, CHIP 10K 5% 1/16W
R1011	1-216-833-11	s	METAL, CHIP 10K 5% 1/16W
RV1	1-238-804-11	s	RES, ADJ METAL 50K
RV51	1-238-788-11	s	RES, ADJ METAL 20K
RV101	1-238-804-11	s	RES, ADJ METAL 50K
RV151	1-238-788-11	s	RES, ADJ METAL 20K
RV201	1-238-804-11	s	RES, ADJ METAL 50K
RV251	1-238-788-11	s	RES, ADJ METAL 20K
RV301	1-238-804-11	s	RES, ADJ METAL 50K
RV351	1-238-788-11	s	RES, ADJ METAL 20K
RV501	1-238-802-11	s	RES, ADJ METAL 10K
RV502	1-238-802-11	s	RES, ADJ METAL 10K
RV503	1-238-801-11	s	RES, ADJ METAL 5K
RV601	1-238-802-11	s	RES, ADJ METAL 10K
RV602	1-238-802-11	s	RES, ADJ METAL 10K
RV603	1-238-800-11	s	RES, ADJ METAL 2K
RV701	1-238-802-11	s	RES, ADJ METAL 10K
RV702	1-238-802-11	s	RES, ADJ METAL 10K
RV750	1-238-801-11	s	RES, ADJ METAL 5K
RV751	1-238-801-11	s	RES, ADJ METAL 5K
RV801	1-238-784-11	s	RES, ADJ METAL 1K
RV851	1-238-784-11	s	RES, ADJ METAL 1K
RV1001	1-238-800-11	s	RES, ADJ METAL 2K

(AU-156 BOARD)

Ref. No. or Q'ty	Part No.	SP	Description
S1	1-570-134-11	s	SWITCH, SLIDE
X501	1-567-859-11	s	CRYSTAL, 3.579545MHz

AU-157 BOARD

Ref. No. or Q'ty	Part No.	SP	Description
1pc	A-8271-227-A	o	MOUNTED CIRCUIT BOARD, AU-157
1pc	3-947-151-01	o	PLATE, SHIELD, CARD
1pc	4-912-181-01	s	SUPPORT, PC
1pc	7-621-759-45	s	SCREW +PSW 2.6X6
2pcs	2-251-622-11	s	LEVER, PC BOARD
C401	1-124-443-00	s	ELECT 100uF 20% 10V
C402	1-124-126-00	s	ELECT 47uF 20% 25V
C403	1-124-126-00	s	ELECT 47uF 20% 25V
C404	1-162-587-11	s	CERAMIC, CHIP 0.039uF 10% 25V
C405	1-163-125-00	s	CERAMIC, CHIP 220PF 5% 50V
C406	1-124-126-00	s	ELECT 47uF 20% 25V
C407	1-162-968-11	s	CERAMIC, CHIP 0.0047uF 10% 50V
C408	1-162-917-11	s	CERAMIC, CHIP 15PF 5% 50V
C409	1-124-126-00	s	ELECT 47uF 20% 25V
C410	1-164-174-11	s	CERAMIC, CHIP 0.0082uF 10% 25V
C411	1-135-149-21	s	TANTALUM, CHIP 2.2uF 10% 10V
C412	1-135-211-11	s	TANTALUM, CHIP 6.8uF 20% 6.3V
C413	1-135-072-21	s	TANTALUM, CHIP 0.22uF 10% 35V
C414	1-124-443-00	s	ELECT 100uF 20% 10V
C415	1-163-035-00	s	CERAMIC, CHIP 0.047uF 50V
C416	1-126-233-11	s	ELECT 22uF 20% 50V
C417	1-126-233-11	s	ELECT 22uF 20% 50V
C418	1-126-233-11	s	ELECT 22uF 20% 50V
C419	1-162-927-11	s	CERAMIC, CHIP 100PF 5% 50V
C420	1-162-970-11	s	CERAMIC, CHIP 0.01uF 10% 25V
C424	1-163-035-00	s	CERAMIC, CHIP 0.047uF 50V
C425	1-163-038-00	s	CERAMIC, CHIP 0.1uF 25V
C426	1-163-035-00	s	CERAMIC, CHIP 0.047uF 50V
C427	1-163-125-00	s	CERAMIC, CHIP 220PF 5% 50V
C428	1-124-126-00	s	ELECT 47uF 20% 25V
C429	1-126-233-11	s	ELECT 22uF 20% 50V
C430	1-124-126-00	s	ELECT 47uF 20% 25V
C431	1-135-211-11	s	TANTALUM, CHIP 6.8uF 20% 6.3V
C432	1-163-137-00	s	CERAMIC, CHIP 680PF 5% 50V
C433	1-124-902-00	s	ELECT 0.47uF 20% 50V
C435	1-126-233-11	s	ELECT 22uF 20% 50V
C436	1-162-927-11	s	CERAMIC, CHIP 100PF 5% 50V
C437	1-162-970-11	s	CERAMIC, CHIP 0.01uF 10% 25V
C438	1-162-970-11	s	CERAMIC, CHIP 0.01uF 10% 25V
C439	1-163-125-00	s	CERAMIC, CHIP 220PF 5% 50V
C440	1-124-126-00	s	ELECT 47uF 20% 25V
C441	1-162-970-11	s	CERAMIC, CHIP 0.01uF 10% 25V
C442	1-124-443-00	s	ELECT 100uF 20% 10V
C443	1-163-035-00	s	CERAMIC, CHIP 0.047uF 50V
C447	1-126-233-11	s	ELECT 22uF 20% 50V
C448	1-124-126-00	s	ELECT 47uF 20% 25V
C449	1-135-211-11	s	TANTALUM, CHIP 6.8uF 20% 6.3V
C450	1-163-012-00	s	CERAMIC CHIP 1800PF 10% 50V
C451	1-124-443-00	s	ELECT 100uF 20% 10V
C452	1-124-126-00	s	ELECT 47uF 20% 25V
C453	1-124-126-00	s	ELECT 47uF 20% 25V
C454	1-162-587-11	s	CERAMIC, CHIP 0.039uF 10% 25V
C456	1-163-125-00	s	CERAMIC, CHIP 220PF 5% 50V
C457	1-162-968-11	s	CERAMIC, CHIP 0.0047uF 10% 50V
C458	1-124-126-00	s	ELECT 47uF 20% 25V
C459	1-162-917-11	s	CERAMIC, CHIP 15PF 5% 50V
C460	1-164-174-11	s	CERAMIC, CHIP 0.0082uF 10% 25V
C461	1-163-137-00	s	CERAMIC, CHIP 680PF 5% 50V
C462	1-135-149-21	s	TANTALUM, CHIP 2.2uF 10% 10V

(AU-157 BOARD)

Ref. No. or Q'ty	Part No.	SP	Description
C463	1-135-211-11	s	TANTALUM, CHIP 6.8uF 20% 6.3V
C464	1-135-072-21	s	TANTALUM, CHIP 0.22uF 10% 35V
C468	1-124-443-00	s	ELECT 100uF 20% 10V
C469	1-163-035-00	s	CERAMIC, CHIP 0.047uF 50V
C470	1-124-443-00	s	ELECT 100uF 20% 10V
C471	1-124-927-11	s	ELECT 4.7uF 20% 100V
C501	1-124-443-00	s	ELECT 100uF 20% 10V
C502	1-124-126-00	s	ELECT 47uF 20% 25V
C503	1-124-126-00	s	ELECT 47uF 20% 25V
C504	1-162-587-11	s	CERAMIC, CHIP 0.039uF 10% 25V
C505	1-163-125-00	s	CERAMIC, CHIP 220PF 5% 50V
C506	1-124-126-00	s	ELECT 47uF 20% 25V
C507	1-162-968-11	s	CERAMIC, CHIP 0.0047uF 10% 50V
C508	1-162-917-11	s	CERAMIC, CHIP 15PF 5% 50V
C509	1-124-126-00	s	ELECT 47uF 20% 25V
C510	1-164-174-11	s	CERAMIC, CHIP 0.0082uF 10% 25V
C511	1-135-149-21	s	TANTALUM, CHIP 2.2uF 10% 10V
C512	1-135-211-11	s	TANTALUM, CHIP 6.8uF 20% 6.3V
C513	1-135-072-21	s	TANTALUM, CHIP 0.22uF 10% 35V
C516	1-126-233-11	s	ELECT 22uF 20% 50V
C517	1-126-233-11	s	ELECT 22uF 20% 50V
C518	1-126-233-11	s	ELECT 22uF 20% 50V
C519	1-162-927-11	s	CERAMIC, CHIP 100PF 5% 50V
C520	1-124-126-00	s	ELECT 47uF 20% 25V
C521	1-124-126-00	s	ELECT 47uF 20% 25V
C522	1-124-126-00	s	ELECT 47uF 20% 25V
C523	1-163-035-00	s	CERAMIC, CHIP 0.047uF 50V
C524	1-163-035-00	s	CERAMIC, CHIP 0.047uF 50V
C525	1-163-038-00	s	CERAMIC, CHIP 0.1uF 25V
C526	1-163-035-00	s	CERAMIC, CHIP 0.047uF 50V
C532	1-163-137-00	s	CERAMIC, CHIP 680PF 5% 50V
C533	1-124-902-00	s	ELECT 0.47uF 20% 50V
C535	1-126-233-11	s	ELECT 22uF 20% 50V
C536	1-162-927-11	s	CERAMIC, CHIP 100PF 5% 50V
C537	1-124-126-00	s	ELECT 47uF 20% 25V
C538	1-124-126-00	s	ELECT 47uF 20% 25V
C539	1-163-035-00	s	CERAMIC, CHIP 0.047uF 50V
C540	1-124-126-00	s	ELECT 47uF 20% 25V
C543	1-163-035-00	s	CERAMIC, CHIP 0.047uF 50V
C550	1-163-012-00	s	CERAMIC CHIP 1800PF 10% 50V
C551	1-124-443-00	s	ELECT 100uF 20% 10V
C552	1-124-126-00	s	ELECT 47uF 20% 25V
C553	1-124-126-00	s	ELECT 47uF 20% 25V
C554	1-162-587-11	s	CERAMIC, CHIP 0.039uF 10% 25V
C555	1-163-125-00	s	CERAMIC, CHIP 220PF 5% 50V
C556	1-124-126-00	s	ELECT 47uF 20% 25V
C557	1-162-968-11	s	CERAMIC, CHIP 0.0047uF 10% 50V
C559	1-162-917-11	s	CERAMIC, CHIP 15PF 5% 50V
C560	1-164-174-11	s	CERAMIC, CHIP 0.0082uF 10% 25V
C561	1-163-137-00	s	CERAMIC, CHIP 680PF 5% 50V
C562	1-135-149-21	s	TANTALUM, CHIP 2.2uF 10% 10V
C563	1-135-211-11	s	TANTALUM, CHIP 6.8uF 20% 6.3V
C564	1-135-072-21	s	TANTALUM, CHIP 0.22uF 10% 35V
C571	1-124-927-11	s	ELECT 4.7uF 20% 100V
C601	1-162-915-11	s	CERAMIC, CHIP 10PF 50V
C602	1-162-915-11	s	CERAMIC, CHIP 10PF 50V
C603	1-163-035-00	s	CERAMIC, CHIP 0.047uF 50V
C605	1-163-035-00	s	CERAMIC, CHIP 0.047uF 50V
C606	1-163-035-00	s	CERAMIC, CHIP 0.047uF 50V

(AU-157 BOARD)

Ref. No. or Q'ty	Part No.	SP	Description
C607	1-135-211-11	s	TANTALUM, CHIP 6.8uF 20% 6.3V
C608	1-163-035-00	s	CERAMIC, CHIP 0.047uF 50V
C609	1-162-921-11	s	CERAMIC, CHIP 33PF 5% 50V
C610	1-162-921-11	s	CERAMIC, CHIP 33PF 5% 50V
C611	1-163-035-00	s	CERAMIC, CHIP 0.047uF 50V
C612	1-163-035-00	s	CERAMIC, CHIP 0.047uF 50V
C613	1-163-035-00	s	CERAMIC, CHIP 0.047uF 50V
C614	1-163-035-00	s	CERAMIC, CHIP 0.047uF 50V
C615	1-163-035-00	s	CERAMIC, CHIP 0.047uF 50V
C616	1-135-155-21	s	TANTALUM, CHIP 4.7uF 10% 16V
C617	1-163-035-00	s	CERAMIC, CHIP 0.047uF 50V
C618	1-135-155-21	s	TANTALUM, CHIP 4.7uF 10% 16V
C619	1-135-155-21	s	TANTALUM, CHIP 4.7uF 10% 16V
C621	1-163-035-00	s	CERAMIC, CHIP 0.047uF 50V
C622	1-163-035-00	s	CERAMIC, CHIP 0.047uF 50V
C623	1-135-166-21	s	TANTALUM, CHIP 47uF 10% 10V
C624	1-163-035-00	s	CERAMIC, CHIP 0.047uF 50V
C625	1-135-155-21	s	TANTALUM, CHIP 4.7uF 10% 16V
C701	1-162-970-11	s	CERAMIC, CHIP 0.01uF 10% 25V
C702	1-163-035-00	s	CERAMIC, CHIP 0.047uF 50V
C703	1-135-211-11	s	TANTALUM, CHIP 6.8uF 20% 6.3V
C704	1-162-913-11	s	CERAMIC 8PF 50V
C705	1-162-915-11	s	CERAMIC, CHIP 10PF 50V
C706	1-163-275-11	s	CERAMIC, CHIP 0.001uF 5% 50V
C707	1-124-499-11	s	ELECT, NONPOLAR 1uF 20% 50V
C708	1-163-035-00	s	CERAMIC, CHIP 0.047uF 50V
C709	1-162-970-11	s	CERAMIC, CHIP 0.01uF 10% 25V
C710	1-163-038-00	s	CERAMIC, CHIP 0.1uF 25V
C711	1-163-035-00	s	CERAMIC, CHIP 0.047uF 50V
C712	1-163-035-00	s	CERAMIC, CHIP 0.047uF 50V
C713	1-135-211-11	s	TANTALUM, CHIP 6.8uF 20% 6.3V
C714	1-163-035-00	s	CERAMIC, CHIP 0.047uF 50V
C715	1-135-211-11	s	TANTALUM, CHIP 6.8uF 20% 6.3V
C716	1-135-211-11	s	TANTALUM, CHIP 6.8uF 20% 6.3V
C717	1-163-035-00	s	CERAMIC, CHIP 0.047uF 50V
C718	1-163-038-00	s	CERAMIC, CHIP 0.1uF 25V
C719	1-163-035-00	s	CERAMIC, CHIP 0.047uF 50V
C720	1-163-035-00	s	CERAMIC, CHIP 0.047uF 50V
C721	1-163-035-00	s	CERAMIC, CHIP 0.047uF 50V
C722	1-162-915-11	s	CERAMIC, CHIP 10PF 50V
C801	1-163-035-00	s	CERAMIC, CHIP 0.047uF 50V
C803	1-163-035-00	s	CERAMIC, CHIP 0.047uF 50V
C805	1-163-133-00	s	CERAMIC, CHIP 470PF 5% 50V
C806	1-163-035-00	s	CERAMIC, CHIP 0.047uF 50V
C807	1-135-211-11	s	TANTALUM, CHIP 6.8uF 20% 6.3V
C808	1-162-970-11	s	CERAMIC, CHIP 0.01uF 10% 25V
C809	1-162-918-11	s	CERAMIC, CHIP 18PF 5% 50V
C810	1-162-919-11	s	CERAMIC, CHIP 22PF 5% 50V
C811	1-162-919-11	s	CERAMIC, CHIP 22PF 5% 50V
C812	1-163-035-00	s	CERAMIC, CHIP 0.047uF 50V
C813	1-135-211-11	s	TANTALUM, CHIP 6.8uF 20% 6.3V
C814	1-135-211-11	s	TANTALUM, CHIP 6.8uF 20% 6.3V
C815	1-163-035-00	s	CERAMIC, CHIP 0.047uF 50V
C816	1-162-913-11	s	CERAMIC 8PF 50V
C817	1-163-035-00	s	CERAMIC, CHIP 0.047uF 50V
C818	1-135-211-11	s	TANTALUM, CHIP 6.8uF 20% 6.3V
C819	1-163-038-00	s	CERAMIC, CHIP 0.1uF 25V
C820	1-124-499-11	s	ELECT, NONPOLAR 1uF 20% 50V
C821	1-163-035-00	s	CERAMIC, CHIP 0.047uF 50V

(AU-157 BOARD)

Ref. No. or Q'ty	Part No.	SP	Description
C822	1-162-970-11	s	CERAMIC, CHIP 0.01uF 10% 25V
C823	1-163-038-00	s	CERAMIC, CHIP 0.1uF 25V
C824	1-163-035-00	s	CERAMIC, CHIP 0.047uF 50V
C825	1-163-035-00	s	CERAMIC, CHIP 0.047uF 50V
C826	1-135-211-11	s	TANTALUM, CHIP 6.8uF 20% 6.3V
C827	1-162-915-11	s	CERAMIC, CHIP 10PF 50V
C828	1-163-275-11	s	CERAMIC, CHIP 0.001uF 5% 50V
C951	1-126-233-11	s	ELECT 22uF 20% 50V
C952	1-126-233-11	s	ELECT 22uF 20% 50V
C953	1-126-233-11	s	ELECT 22uF 20% 50V
C954	1-126-233-11	s	ELECT 22uF 20% 50V
C955	1-163-035-00	s	CERAMIC, CHIP 0.047uF 50V
C956	1-163-035-00	s	CERAMIC, CHIP 0.047uF 50V
C957	1-163-035-00	s	CERAMIC, CHIP 0.047uF 50V
C958	1-163-035-00	s	CERAMIC, CHIP 0.047uF 50V
C960	1-124-443-00	s	ELECT 100uF 20% 10V
C961	1-163-035-00	s	CERAMIC, CHIP 0.047uF 50V
C962	1-163-035-00	s	CERAMIC, CHIP 0.047uF 50V
C963	1-124-443-00	s	ELECT 100uF 20% 10V
C964	1-163-035-00	s	CERAMIC, CHIP 0.047uF 50V
C965	1-163-035-00	s	CERAMIC, CHIP 0.047uF 50V
C966	1-128-057-11	s	ELECT 330uF 20% 6.3V
C967	1-136-157-11	s	METLIZED FILM 0.022uF 5% 50V
CN64	1-506-484-11	s	CONNECTOR, 5P, MALE
CN65	1-506-487-11	s	CONNECTOR, 8P, MALE
CN251	1-563-863-21	o	CONNECTOR, 26P, MALE
CN601	1-573-782-21	o	CONNECTOR, PHEC 60P, MALE
CN602	1-573-782-21	o	CONNECTOR, PHEC 60P, MALE
CV701	1-141-423-61	s	CAP, TRIMMER
CV801	1-141-423-61	s	CAP, TRIMMER
D601	8-719-941-86	s	DIODE DAN202U
D602	8-719-941-09	s	DIODE DAP202U
D603	8-719-941-09	s	DIODE DAP202U
D604	8-719-941-86	s	DIODE DAN202U
D605	8-719-941-09	s	DIODE DAP202U
D606	8-719-941-86	s	DIODE DAN202U
D701	8-713-300-88	s	DIODE 1T33C-01
D801	8-719-941-09	s	DIODE DAP202U
D802	8-713-300-88	s	DIODE 1T33C-01
FL401	1-235-900-11	s	FILTER, LOW-PASS
FL402	1-235-900-11	s	FILTER, LOW-PASS
FL501	1-235-900-11	s	FILTER, LOW-PASS
FL502	1-235-900-11	s	FILTER, LOW-PASS
IC401	8-759-700-43	s	IC NJM4558M
IC402	8-752-009-90	s	IC CX20099
IC403	8-759-700-43	s	IC NJM4558M
IC404	8-752-322-57	s	IC CXD1077M
IC405	8-759-929-26	s	IC TL431CPS
IC406	8-752-322-57	s	IC CXD1077M
IC407	8-759-929-26	s	IC TL431CPS
IC408	8-759-700-43	s	IC NJM4558M
IC409	8-752-009-90	s	IC CX20099
IC410	8-759-603-27	s	IC M5201FP
IC501	8-759-700-43	s	IC NJM4558M
IC503	8-759-700-43	s	IC NJM4558M
IC508	8-759-700-43	s	IC NJM4558M
IC510	8-759-603-27	s	IC M5201FP
IC601	8-759-149-34	s	IC UPD75106G-591-1B

(AU-157 BOARD)

Ref. No. or Q'ty	Part No.	SP	Description
IC603	8-759-009-07	s	IC MC14053BF
IC604	8-752-324-45	s	IC CXD1066Q-Z
IC605	8-759-972-13	s	IC CF77309FR
IC606	8-752-835-09	s	IC CXP5084H-645Q
IC607	8-759-054-79	s	IC CF77499PG
IC608	8-759-176-00	s	IC CXD8369AQ
IC609	8-759-926-77	s	IC SN74HC541NS
IC610	8-759-926-77	s	IC SN74HC541NS
IC611	8-759-239-23	s	IC TC74HC86AF
IC612	8-759-239-58	s	IC TC74HC221AF
IC613	8-759-926-18	s	IC SN74HC157ANS
IC701	8-752-010-20	s	IC CX20102
IC702	8-752-332-46	s	IC CXD1208Q
IC703	8-752-331-00	s	IC CXK5864BM-12L
IC704	8-759-926-18	s	IC SN74HC157ANS
IC705	8-759-926-18	s	IC SN74HC157ANS
IC706	8-759-926-18	s	IC SN74HC157ANS
IC801	8-752-010-20	s	IC CX20102
IC802	8-752-332-46	s	IC CXD1208Q
IC803	8-752-331-00	s	IC CXK5864BM-12L
L402	1-410-658-31	s	INDUCTOR, CHIP 220UH
L403	1-410-658-31	s	INDUCTOR, CHIP 220UH
L601	1-410-393-11	s	INDUCTOR, CHIP 100UH
L603	1-410-393-11	s	INDUCTOR, CHIP 100UH
L604	1-410-393-11	s	INDUCTOR, CHIP 100UH
L606	1-410-393-11	s	INDUCTOR, CHIP 100UH
L607	1-410-393-11	s	INDUCTOR, CHIP 100UH
L608	1-410-381-11	s	INDUCTOR, CHIP 10UH
L701	1-410-393-11	s	INDUCTOR, CHIP 100UH
L702	1-410-393-11	s	INDUCTOR, CHIP 100UH
L703	1-410-393-11	s	INDUCTOR, CHIP 100UH
L704	1-408-970-21	s	INDUCTOR 10UH
L705	1-410-393-11	s	INDUCTOR, CHIP 100UH
L801	1-410-393-11	s	INDUCTOR, CHIP 100UH
L802	1-410-393-11	s	INDUCTOR, CHIP 100UH
L803	1-410-393-11	s	INDUCTOR, CHIP 100UH
L804	1-408-970-21	s	INDUCTOR 10UH
L805	1-410-393-11	s	INDUCTOR, CHIP 100UH
L952	1-408-978-21	s	INDUCTOR 47uH
L953	1-408-978-21	s	INDUCTOR 47uH
L954	1-412-533-11	s	INDUCTOR 47uH
L955	1-412-533-11	s	INDUCTOR 47uH
L956	1-412-533-11	s	INDUCTOR 47uH
Q401	8-729-209-07	s	TRANSISTOR 2SC4213-B
Q402	8-729-209-07	s	TRANSISTOR 2SC4213-B
Q501	8-729-209-07	s	TRANSISTOR 2SC4213-B
Q502	8-729-209-07	s	TRANSISTOR 2SC4213-B
Q602	8-729-905-18	s	TRANSISTOR DTC144EU
Q603	8-729-905-18	s	TRANSISTOR DTC144EU
Q604	8-729-905-18	s	TRANSISTOR DTC144EU
Q605	8-729-209-07	s	TRANSISTOR 2SC4213-B
Q606	8-729-905-12	s	TRANSISTOR DTA144EU
Q607	8-729-905-18	s	TRANSISTOR DTC144EU
Q608	8-729-905-18	s	TRANSISTOR DTC144EU
Q609	8-729-905-12	s	TRANSISTOR DTA144EU
Q610	8-729-905-18	s	TRANSISTOR DTC144EU
Q611	8-729-905-18	s	TRANSISTOR DTC144EU
Q612	8-729-905-18	s	TRANSISTOR DTC144EU

(AU-157 BOARD)

Ref. No. or Q'ty	Part No.	SP	Description
Q613	8-729-905-18	s	TRANSISTOR DTC144EU
Q801	8-729-117-72	s	TRANSISTOR 2SC4178
Q802	8-729-117-16	s	TRANSISTOR 2SA1611-M6
Q803	8-729-117-72	s	TRANSISTOR 2SC4178
R401	1-216-829-11	s	METAL, CHIP 4.7K 5% 1/16W
R402	1-216-820-11	s	METAL, CHIP 820 5% 1/16W
R403	1-216-822-11	s	METAL, CHIP 1.2K 5% 1/16W
R404	1-216-825-11	s	METAL, CHIP 2.2K 5% 1/16W
R405	1-216-821-11	s	METAL, CHIP 1K 5% 1/16W
R406	1-216-833-11	s	METAL, CHIP 10K 5% 1/16W
R407	1-216-829-11	s	METAL, CHIP 4.7K 5% 1/16W
R408	1-216-833-11	s	METAL, CHIP 10K 5% 1/16W
R409	1-216-826-11	s	METAL, CHIP 2.7K 5% 1/16W
R410	1-216-819-11	s	METAL, CHIP 680 5% 1/16W
R411	1-216-828-11	s	METAL, CHIP 3.9K 5% 1/16W
R412	1-216-834-11	s	METAL, CHIP 12K 5% 1/16W
R413	1-216-827-11	s	METAL, CHIP 3.3K 5% 1/16W
R414	1-216-827-11	s	METAL, CHIP 3.3K 5% 1/16W
R415	1-216-826-11	s	METAL, CHIP 2.7K 5% 1/16W
R416	1-216-823-11	s	METAL, CHIP 1.5K 5% 1/16W
R417	1-216-822-11	s	METAL, CHIP 1.2K 5% 1/16W
R418	1-216-823-11	s	METAL, CHIP 1.5K 5% 1/16W
R419	1-216-823-11	s	METAL, CHIP 1.5K 5% 1/16W
R420	1-216-840-11	s	METAL, CHIP 39K 5% 1/16W
R422	1-216-835-11	s	METAL, CHIP 15K 5% 1/16W
R423	1-216-825-11	s	METAL, CHIP 2.2K 5% 1/16W
R424	1-216-825-11	s	METAL, CHIP 2.2K 5% 1/16W
R425	1-216-826-11	s	METAL, CHIP 2.7K 5% 1/16W
R427	1-216-821-11	s	METAL, CHIP 1K 5% 1/16W
R428	1-216-816-11	s	METAL, CHIP 390 5% 1/16W
R429	1-218-285-11	s	METAL, CHIP 75 5% 1/16W
R430	1-216-826-11	s	METAL, CHIP 2.7K 5% 1/16W
R431	1-216-822-11	s	METAL, CHIP 1.2K 5% 1/16W
R434	1-216-811-11	s	METAL, CHIP 150 5% 1/16W
R435	1-218-768-11	s	METAL 470K 0.5% 1/10W
R436	1-216-814-11	s	METAL, CHIP 270 5% 1/16W
R437	1-216-049-00	s	METAL, CHIP 1K 5% 1/10W
R438	1-216-829-11	s	METAL, CHIP 4.7K 5% 1/16W
R439	1-216-049-00	s	METAL, CHIP 1K 5% 1/10W
R440	1-216-826-11	s	METAL, CHIP 2.7K 5% 1/16W
R441	1-216-821-11	s	METAL, CHIP 1K 5% 1/16W
R442	1-216-816-11	s	METAL, CHIP 390 5% 1/16W
R443	1-218-285-11	s	METAL, CHIP 75 5% 1/16W
R444	1-216-855-11	s	METAL, CHIP 680K 5% 1/16W
R445	1-216-826-11	s	METAL, CHIP 2.7K 5% 1/16W
R446	1-216-822-11	s	METAL, CHIP 1.2K 5% 1/16W
R448	1-216-811-11	s	METAL, CHIP 150 5% 1/16W
R449	1-216-820-11	s	METAL, CHIP 820 5% 1/16W
R450	1-216-822-11	s	METAL, CHIP 1.2K 5% 1/16W
R451	1-216-825-11	s	METAL, CHIP 2.2K 5% 1/16W
R452	1-216-818-11	s	METAL, CHIP 560 5% 1/16W
R453	1-216-834-11	s	METAL, CHIP 12K 5% 1/16W
R454	1-216-832-11	s	METAL, CHIP 8.2K 5% 1/16W
R456	1-216-833-11	s	METAL, CHIP 10K 5% 1/16W
R457	1-216-829-11	s	METAL, CHIP 4.7K 5% 1/16W
R458	1-216-833-11	s	METAL, CHIP 10K 5% 1/16W
R459	1-216-826-11	s	METAL, CHIP 2.7K 5% 1/16W
R460	1-216-819-11	s	METAL, CHIP 680 5% 1/16W
R461	1-216-825-11	s	METAL, CHIP 2.2K 5% 1/16W

(AU-157 BOARD)

Ref. No. or Q'ty	Part No.	SP	Description
R462	1-216-828-11	s	METAL, CHIP 3.9K 5% 1/16W
R463	1-216-834-11	s	METAL, CHIP 12K 5% 1/16W
R464	1-216-827-11	s	METAL, CHIP 3.3K 5% 1/16W
R465	1-216-827-11	s	METAL, CHIP 3.3K 5% 1/16W
R466	1-216-826-11	s	METAL, CHIP 2.7K 5% 1/16W
R467	1-216-825-11	s	METAL, CHIP 2.2K 5% 1/16W
R468	1-216-829-11	s	METAL, CHIP 4.7K 5% 1/16W
R469	1-218-708-11	s	METAL, CHIP 4.7K 0.50% 1/16W
R470	1-216-817-11	s	METAL, CHIP 470 5% 1/16W
R471	1-218-708-11	s	METAL, CHIP 4.7K 0.50% 1/16W
R472	1-216-049-00	s	METAL, CHIP 1K 5% 1/10W
R473	1-216-049-00	s	METAL, CHIP 1K 5% 1/10W
R474	1-216-049-00	s	METAL, CHIP 1K 5% 1/10W
R475	1-216-049-00	s	METAL, CHIP 1K 5% 1/10W
R476	1-216-829-11	s	METAL, CHIP 4.7K 5% 1/16W
R477	1-216-833-11	s	METAL, CHIP 10K 5% 1/16W
R501	1-216-829-11	s	METAL, CHIP 4.7K 5% 1/16W
R502	1-216-820-11	s	METAL, CHIP 820 5% 1/16W
R503	1-216-822-11	s	METAL, CHIP 1.2K 5% 1/16W
R504	1-216-825-11	s	METAL, CHIP 2.2K 5% 1/16W
R505	1-216-821-11	s	METAL, CHIP 1K 5% 1/16W
R506	1-216-833-11	s	METAL, CHIP 10K 5% 1/16W
R507	1-216-829-11	s	METAL, CHIP 4.7K 5% 1/16W
R508	1-216-833-11	s	METAL, CHIP 10K 5% 1/16W
R509	1-216-826-11	s	METAL, CHIP 2.7K 5% 1/16W
R510	1-216-819-11	s	METAL, CHIP 680 5% 1/16W
R511	1-216-828-11	s	METAL, CHIP 3.9K 5% 1/16W
R512	1-216-834-11	s	METAL, CHIP 12K 5% 1/16W
R513	1-216-827-11	s	METAL, CHIP 3.3K 5% 1/16W
R514	1-216-827-11	s	METAL, CHIP 3.3K 5% 1/16W
R515	1-216-826-11	s	METAL, CHIP 2.7K 5% 1/16W
R516	1-216-823-11	s	METAL, CHIP 1.5K 5% 1/16W
R517	1-216-822-11	s	METAL, CHIP 1.2K 5% 1/16W
R518	1-216-823-11	s	METAL, CHIP 1.5K 5% 1/16W
R519	1-216-823-11	s	METAL, CHIP 1.5K 5% 1/16W
R520	1-216-840-11	s	METAL, CHIP 39K 5% 1/16W
R522	1-216-835-11	s	METAL, CHIP 15K 5% 1/16W
R523	1-216-825-11	s	METAL, CHIP 2.2K 5% 1/16W
R524	1-216-825-11	s	METAL, CHIP 2.2K 5% 1/16W
R525	1-216-826-11	s	METAL, CHIP 2.7K 5% 1/16W
R536	1-216-814-11	s	METAL, CHIP 270 5% 1/16W
R538	1-216-829-11	s	METAL, CHIP 4.7K 5% 1/16W
R540	1-216-826-11	s	METAL, CHIP 2.7K 5% 1/16W
R541	1-216-825-11	s	METAL, CHIP 2.2K 5% 1/16W
R549	1-216-820-11	s	METAL, CHIP 820 5% 1/16W
R550	1-216-822-11	s	METAL, CHIP 1.2K 5% 1/16W
R552	1-216-818-11	s	METAL, CHIP 560 5% 1/16W
R553	1-216-834-11	s	METAL, CHIP 12K 5% 1/16W
R554	1-216-832-11	s	METAL, CHIP 8.2K 5% 1/16W
R556	1-216-833-11	s	METAL, CHIP 10K 5% 1/16W
R557	1-216-829-11	s	METAL, CHIP 4.7K 5% 1/16W
R558	1-216-833-11	s	METAL, CHIP 10K 5% 1/16W
R559	1-216-826-11	s	METAL, CHIP 2.7K 5% 1/16W
R560	1-216-819-11	s	METAL, CHIP 680 5% 1/16W
R561	1-216-825-11	s	METAL, CHIP 2.2K 5% 1/16W
R562	1-216-828-11	s	METAL, CHIP 3.9K 5% 1/16W
R563	1-216-834-11	s	METAL, CHIP 12K 5% 1/16W
R564	1-216-827-11	s	METAL, CHIP 3.3K 5% 1/16W
R565	1-216-827-11	s	METAL, CHIP 3.3K 5% 1/16W

(AU-157 BOARD)

Ref. No. or Q'ty	Part No.	SP	Description
R566	1-216-826-11	s	METAL, CHIP 2.7K 5% 1/16W
R567	1-216-825-11	s	METAL, CHIP 2.2K 5% 1/16W
R568	1-216-829-11	s	METAL, CHIP 4.7K 5% 1/16W
R570	1-216-817-11	s	METAL, CHIP 470 5% 1/16W
R576	1-216-829-11	s	METAL, CHIP 4.7K 5% 1/16W
R577	1-216-833-11	s	METAL, CHIP 10K 5% 1/16W
R601	1-216-841-11	s	METAL, CHIP 47K 5% 1/16W
R602	1-216-841-11	s	METAL, CHIP 47K 5% 1/16W
R603	1-216-845-11	s	METAL, CHIP 100K 5% 1/16W
R604	1-216-035-00	s	METAL, CHIP 270 5% 1/10W
R605	1-216-845-11	s	METAL, CHIP 100K 5% 1/16W
R606	1-216-833-11	s	METAL, CHIP 10K 5% 1/16W
R607	1-216-833-11	s	METAL, CHIP 10K 5% 1/16W
R609	1-216-841-11	s	METAL, CHIP 47K 5% 1/16W
R610	1-216-841-11	s	METAL, CHIP 47K 5% 1/16W
R611	1-216-837-11	s	METAL, CHIP 22K 5% 1/16W
R612	1-216-837-11	s	METAL, CHIP 22K 5% 1/16W
R613	1-216-837-11	s	METAL, CHIP 22K 5% 1/16W
R614	1-216-841-11	s	METAL, CHIP 47K 5% 1/16W
R615	1-216-841-11	s	METAL, CHIP 47K 5% 1/16W
R616	1-216-837-11	s	METAL, CHIP 22K 5% 1/16W
R617	1-216-837-11	s	METAL, CHIP 22K 5% 1/16W
R618	1-216-836-11	s	METAL, CHIP 18K 5% 1/16W
R619	1-216-837-11	s	METAL, CHIP 22K 5% 1/16W
R620	1-216-841-11	s	METAL, CHIP 47K 5% 1/16W
R621	1-216-841-11	s	METAL, CHIP 47K 5% 1/16W
R622	1-216-841-11	s	METAL, CHIP 47K 5% 1/16W
R623	1-216-817-11	s	METAL, CHIP 470 5% 1/16W
R624	1-216-833-11	s	METAL, CHIP 10K 5% 1/16W
R625	1-216-829-11	s	METAL, CHIP 4.7K 5% 1/16W
R626	1-216-829-11	s	METAL, CHIP 4.7K 5% 1/16W
R627	1-216-841-11	s	METAL, CHIP 47K 5% 1/16W
R628	1-216-833-11	s	METAL, CHIP 10K 5% 1/16W
R629	1-216-845-11	s	METAL, CHIP 100K 5% 1/16W
R630	1-216-833-11	s	METAL, CHIP 10K 5% 1/16W
R631	1-216-841-11	s	METAL, CHIP 47K 5% 1/16W
R632	1-216-841-11	s	METAL, CHIP 47K 5% 1/16W
R633	1-216-841-11	s	METAL, CHIP 47K 5% 1/16W
R634	1-216-841-11	s	METAL, CHIP 47K 5% 1/16W
R635	1-216-841-11	s	METAL, CHIP 47K 5% 1/16W
R636	1-216-841-11	s	METAL, CHIP 47K 5% 1/16W
R637	1-216-833-11	s	METAL, CHIP 10K 5% 1/16W
R638	1-216-833-11	s	METAL, CHIP 10K 5% 1/16W
R639	1-216-841-11	s	METAL, CHIP 47K 5% 1/16W
R640	1-216-829-11	s	METAL, CHIP 4.7K 5% 1/16W
R641	1-216-821-11	s	METAL, CHIP 1K 5% 1/16W
R642	1-216-841-11	s	METAL, CHIP 47K 5% 1/16W
R643	1-216-841-11	s	METAL, CHIP 47K 5% 1/16W
R644	1-216-841-11	s	METAL, CHIP 47K 5% 1/16W
R645	1-216-841-11	s	METAL, CHIP 47K 5% 1/16W
R646	1-216-841-11	s	METAL, CHIP 47K 5% 1/16W
R647	1-216-841-11	s	METAL, CHIP 47K 5% 1/16W
R648	1-216-841-11	s	METAL, CHIP 47K 5% 1/16W
R649	1-216-841-11	s	METAL, CHIP 47K 5% 1/16W
R650	1-216-035-00	s	METAL, CHIP 270 5% 1/10W
R651	1-216-817-11	s	METAL, CHIP 470 5% 1/16W
R652	1-216-035-00	s	METAL, CHIP 270 5% 1/10W
R653	1-216-035-00	s	METAL, CHIP 270 5% 1/10W
R654	1-216-035-00	s	METAL, CHIP 270 5% 1/10W

(AU-157 BOARD)

Ref. No. or Q'ty	Part No.	SP	Description
R655	1-216-035-00	s	METAL, CHIP 270 5% 1/10W
R656	1-216-035-00	s	METAL, CHIP 270 5% 1/10W
R657	1-216-035-00	s	METAL, CHIP 270 5% 1/10W
R658	1-216-833-11	s	METAL, CHIP 10K 5% 1/16W
R659	1-216-833-11	s	METAL, CHIP 10K 5% 1/16W
R660	1-216-833-11	s	METAL, CHIP 10K 5% 1/16W
R661	1-216-035-00	s	METAL, CHIP 270 5% 1/10W
R662	1-216-035-00	s	METAL, CHIP 270 5% 1/10W
R663	1-216-035-00	s	METAL, CHIP 270 5% 1/10W
R664	1-216-035-00	s	METAL, CHIP 270 5% 1/10W
R665	1-216-035-00	s	METAL, CHIP 270 5% 1/10W
R668	1-216-035-00	s	METAL, CHIP 270 5% 1/10W
R669	1-216-035-00	s	METAL, CHIP 270 5% 1/10W
R670	1-216-035-00	s	METAL, CHIP 270 5% 1/10W
R671	1-216-035-00	s	METAL, CHIP 270 5% 1/10W
R672	1-216-035-00	s	METAL, CHIP 270 5% 1/10W
R673	1-216-035-00	s	METAL, CHIP 270 5% 1/10W
R674	1-216-035-00	s	METAL, CHIP 270 5% 1/10W
R675	1-216-035-00	s	METAL, CHIP 270 5% 1/10W
R676	1-216-035-00	s	METAL, CHIP 270 5% 1/10W
R677	1-216-833-11	s	METAL, CHIP 10K 5% 1/16W
R678	1-216-833-11	s	METAL, CHIP 10K 5% 1/16W
R679	1-216-833-11	s	METAL, CHIP 10K 5% 1/16W
R680	1-216-841-11	s	METAL, CHIP 47K 5% 1/16W
R681	1-216-841-11	s	METAL, CHIP 47K 5% 1/16W
R683	1-216-833-11	s	METAL, CHIP 10K 5% 1/16W
R686	1-216-841-11	s	METAL, CHIP 47K 5% 1/16W
R687	1-216-841-11	s	METAL, CHIP 47K 5% 1/16W
R688	1-216-841-11	s	METAL, CHIP 47K 5% 1/16W
R689	1-216-841-11	s	METAL, CHIP 47K 5% 1/16W
R690	1-216-841-11	s	METAL, CHIP 47K 5% 1/16W
R701	1-216-823-11	s	METAL, CHIP 1.5K 5% 1/16W
R702	1-216-809-11	s	METAL, CHIP 100 5% 1/16W
R703	1-216-818-11	s	METAL, CHIP 560 5% 1/16W
R704	1-216-845-11	s	METAL, CHIP 100K 5% 1/16W
R705	1-216-845-11	s	METAL, CHIP 100K 5% 1/16W
R706	1-216-845-11	s	METAL, CHIP 100K 5% 1/16W
R707	1-216-847-11	s	METAL, CHIP 150K 5% 1/16W
R708	1-216-839-11	s	METAL, CHIP 33K 5% 1/16W
R709	1-216-833-11	s	METAL, CHIP 10K 5% 1/16W
R710	1-216-846-11	s	METAL, CHIP 120K 5% 1/16W
R711	1-216-821-11	s	METAL, CHIP 1K 5% 1/16W
R719	1-216-833-11	s	METAL, CHIP 10K 5% 1/16W
R720	1-216-810-11	s	METAL, CHIP 120 5% 1/16W
R721	1-216-821-11	s	METAL, CHIP 1K 5% 1/16W
R722	1-216-821-11	s	METAL, CHIP 1K 5% 1/16W
R723	1-216-817-11	s	METAL, CHIP 470 5% 1/16W
R801	1-216-833-11	s	METAL, CHIP 10K 5% 1/16W
R802	1-216-821-11	s	METAL, CHIP 1K 5% 1/16W
R803	1-216-809-11	s	METAL, CHIP 100 5% 1/16W
R804	1-216-864-11	s	METAL, CHIP 0 5% 1/16W
R805	1-216-829-11	s	METAL, CHIP 4.7K 5% 1/16W
R806	1-216-817-11	s	METAL, CHIP 470 5% 1/16W
R808	1-216-817-11	s	METAL, CHIP 470 5% 1/16W
R809	1-216-864-11	s	METAL, CHIP 0 5% 1/16W
R810	1-216-817-11	s	METAL, CHIP 470 5% 1/16W
R811	1-216-827-11	s	METAL, CHIP 3.3K 5% 1/16W
R814	1-216-819-11	s	METAL, CHIP 680 5% 1/16W
R815	1-216-822-11	s	METAL, CHIP 1.2K 5% 1/16W

(AU-157 BOARD)

Ref. No. or Q'ty	Part No.	SP	Description
R816	1-216-832-11	s	METAL, CHIP 8.2K 5% 1/16W
R817	1-216-822-11	s	METAL, CHIP 1.2K 5% 1/16W
R818	1-216-818-11	s	METAL, CHIP 560 5% 1/16W
R819	1-216-821-11	s	METAL, CHIP 1K 5% 1/16W
R820	1-216-821-11	s	METAL, CHIP 1K 5% 1/16W
R821	1-216-821-11	s	METAL, CHIP 1K 5% 1/16W
R822	1-216-820-11	s	METAL, CHIP 820 5% 1/16W
R823	1-216-845-11	s	METAL, CHIP 100K 5% 1/16W
R824	1-216-845-11	s	METAL, CHIP 100K 5% 1/16W
R825	1-216-845-11	s	METAL, CHIP 100K 5% 1/16W
R826	1-216-847-11	s	METAL, CHIP 150K 5% 1/16W
R827	1-216-839-11	s	METAL, CHIP 33K 5% 1/16W
R828	1-216-810-11	s	METAL, CHIP 120 5% 1/16W
R829	1-216-833-11	s	METAL, CHIP 10K 5% 1/16W
R830	1-216-846-11	s	METAL, CHIP 120K 5% 1/16W
R831	1-216-821-11	s	METAL, CHIP 1K 5% 1/16W
R832	1-216-821-11	s	METAL, CHIP 1K 5% 1/16W
R833	1-216-864-11	s	METAL, CHIP 0 5% 1/16W
R890	1-216-839-11	s	METAL, CHIP 33K 5% 1/16W
R900	1-218-738-91	s	METAL, CHIP 82K 0.50% 1/16W
RV402	1-238-803-11	s	RES, ADJ METAL 20K
RV403	1-238-785-11	s	RES, ADJ METAL 2K
RV408	1-238-792-11	s	RES, ADJ, CERMET 500K
RV502	1-238-803-11	s	RES, ADJ METAL 20K
RV503	1-238-785-11	s	RES, ADJ METAL 2K
RV803	1-238-800-11	s	RES, ADJ METAL 2K
RV804	1-238-803-11	s	RES, ADJ CERAMET 20K
X601	1-567-121-00	s	CRYSTAL 4.194304MHz
X602	1-567-346-11	s	RESONATOR, CERAMIC

CN-551 BOARD

Ref. No. or Q'ty	Part No.	SP	Description
1pc	1-642-953-14	o	PRINTED CIRCUIT BOARD, CN-551
C1	1-163-038-00	s	CERAMIC, CHIP 0.1uF 25V
C2	1-126-189-11	s	ELECT 0.22uF 20% 50V
C3	1-126-191-11	s	ELECT 0.47uF 20% 50V
C4	1-126-603-11	s	ELECT 4.7uF 20% 35V
C5	1-163-275-11	s	CERAMIC, CHIP 0.001uF 5% 50V
C6	1-163-275-11	s	CERAMIC, CHIP 0.001uF 5% 50V
C7	1-163-038-00	s	CERAMIC, CHIP 0.1uF 25V
CN331	1-506-481-11	s	CONNECTOR, 2P, MALE
CN332	1-506-483-21	s	CONNECTOR, 4P, MALE
CN333	1-506-484-11	s	CONNECTOR, 5P, MALE
CN334	1-506-481-11	s	CONNECTOR, 2P, MALE
CN335	1-506-477-11	s	CONNECTOR, 12P, MALE
CN336	1-506-473-11	o	CONNECTOR, 8P, MALE
CN337	1-506-475-11	s	CONNECTOR, 10P, MALE
CN338	1-506-475-11	s	CONNECTOR, 10P, MALE
CN339	1-506-476-11	o	CONNECTOR, 11P, MALE
CN340	1-506-480-11	o	CONNECTOR, 15P, MALE
CN341	1-506-483-21	s	CONNECTOR, 4P, MALE
CN342	1-506-469-11	s	CONNECTOR, 4P, MALE
CN343	1-565-211-11	o	CONNECTOR, FPC (ZIF) 22P FEMALE
CN344	1-566-527-11	s	CONNECTOR, FPC (ZIF) 11P
CN345	1-566-531-11	s	CONNECTOR, FPC (ZIF) 15P
CN346	1-506-483-21	s	CONNECTOR, 4P, MALE
CN347	1-506-481-11	s	CONNECTOR, 2P, MALE
CN348	1-506-471-11	s	CONNECTOR, 6P, MALE
IC1	8-759-107-68	s	IC CX20115A
IC2	8-759-701-97	s	IC NJM4562M
R2	1-218-750-11	s	METAL, CHIP 270K 0.50% 1/16W
R3	1-218-716-11	s	METAL, CHIP 10K 0.50% 1/16W
R4	1-218-716-11	s	METAL, CHIP 10K 0.50% 1/16W
R5	1-218-716-11	s	METAL, CHIP 10K 0.50% 1/16W
R6	1-218-716-11	s	METAL, CHIP 10K 0.50% 1/16W
R7	1-216-854-11	s	METAL, CHIP 560K 5% 1/16W
R8	1-216-854-11	s	METAL, CHIP 560K 5% 1/16W
R10	1-216-809-11	s	METAL, CHIP 100 5% 1/16W
R11	1-216-809-11	s	METAL, CHIP 100 5% 1/16W
RV1	1-228-474-00	s	RES, ADJ METAL 10K

CP-176 BOARD

Ref. No. or Q'ty	Part No.	SP	Description
1pc	1-642-967-11	o	PRINTED CIRCUIT BOARD, CP-176
1pc	3-683-631-01	o	CLAMP
C1	1-161-772-11	s	CERAMIC 0.1uF 10% 25V
CN1001	1-573-582-11	s	CONNECTOR, BNC, FEMALE
CN1002	1-573-583-11	s	CONNECTOR, BNC, FEMALE
CN1003	1-573-582-11	s	CONNECTOR, BNC, FEMALE
CN1004	1-573-602-11	s	CONNECTOR 8P (MONITOR), FEMALE
CN1005	1-691-273-11	s	JACK, PIN 1P
CN1006	1-573-591-11	s	CONNECTOR, CIRCULAR 7P, FEMALE
CN1008	1-695-195-11	s	CONNECTOR, CIRCULAR 7P, MALE
CN1010	1-573-590-12	s	CONNECTOR, CIRCULAR 4P, FEMALE
CN1011	1-573-590-12	s	CONNECTOR, CIRCULAR 4P, FEMALE
R1	1-215-394-00	s	METAL 75 1% 1/6W
R2	1-215-394-00	s	METAL 75 1% 1/6W
R3	1-215-394-00	s	METAL 75 1% 1/6W
R5	1-215-394-00	s	METAL 75 1% 1/6W
R7	1-215-394-00	s	METAL 75 1% 1/6W
R8	1-215-394-00	s	METAL 75 1% 1/6W
S1	1-570-145-11	s	SWITCH, SLIDE

CP-177 BOARD

Ref. No. or Q'ty	Part No.	SP	Description
1pc	1-642-968-12	o	PRINTED CIRCUIT BOARD, CP-177
1pc	3-683-631-01	o	CLAMP
CN1051	1-573-594-11	s	CONNECTOR, XLR 3P, FEMALE (for UC)
CN1051	1-573-593-11	s	CONNECTOR, XLR 3P, MALE (for J)
CN1052	1-573-594-11	s	CONNECTOR, XLR 3P, FEMALE (for UC)
CN1052	1-573-593-11	s	CONNECTOR, XLR 3P, MALE (for J)
CN1053	1-573-594-11	s	CONNECTOR, XLR 3P, FEMALE (for UC)
CN1053	1-573-593-11	s	CONNECTOR, XLR 3P, MALE (for J)
CN1054	1-573-594-11	s	CONNECTOR, XLR 3P, FEMALE (for UC)
CN1054	1-573-593-11	s	CONNECTOR, XLR 3P, MALE (for J)
CN1055	1-573-593-11	s	CONNECTOR, XLR 3P, MALE (for UC)
CN1055	1-573-594-11	s	CONNECTOR, XLR 3P, FEMALE (for J)
CN1056	1-573-593-11	s	CONNECTOR, XLR 3P, MALE (for UC)
CN1056	1-573-594-11	s	CONNECTOR, XLR 3P, FEMALE (for J)
CN1057	1-573-593-11	s	CONNECTOR, XLR 3P, MALE (for UC)
CN1057	1-573-594-11	s	CONNECTOR, XLR 3P, FEMALE (for J)
CN1058	1-573-593-11	s	CONNECTOR, XLR 3P, MALE (for UC)
CN1058	1-573-594-11	s	CONNECTOR, XLR 3P, FEMALE (for J)
R1	1-249-415-11	s	CARBON 680 5% 1/4W
R2	1-249-429-11	s	CARBON 10K 5% 1/4W
R3	1-249-415-11	s	CARBON 680 5% 1/4W
R4	1-249-429-11	s	CARBON 10K 5% 1/4W
R5	1-249-429-11	s	CARBON 680 5% 1/4W (for UC)
R6	1-249-429-11	s	CARBON 10K 5% 1/4W (for UC)
R7	1-249-415-11	s	CARBON 680 5% 1/4W (for J)
R8	1-249-429-11	s	CARBON 10K 5% 1/4W (for J)
R9	1-249-415-11	s	CARBON 680 5% 1/4W
R10	1-249-429-11	s	CARBON 10K 5% 1/4W
R11	1-249-415-11	s	CARBON 680 5% 1/4W (for J)
R12	1-249-429-11	s	CARBON 10K 5% 1/4W (for J)
S1051	1-570-145-11	s	SWITCH, SLIDE
S1052	1-570-145-11	s	SWITCH, SLIDE

CR-40 BOARD

Ref. No. or Q'ty	Part No.	SP	Description
1pc	A-8276-243-A	o	MOUNTED CIRCUIT BOARD, CR-40
C365	1-162-970-11	s	CERAMIC, CHIP 0.01uF 10% 25V
C366	1-135-165-11	s	TANTALUM 33uF 20% 16V
C367	1-135-165-11	s	TANTALUM 33uF 20% 16V
C368	1-135-166-21	s	TANTALUM, CHIP 47uF 10% 10V
C369	1-164-346-11	s	CERAMIC 1uF 16V
C370	1-135-227-11	s	TANTAL 100uF 20% 6.3
C371	1-135-227-11	s	TANTAL 100uF 20% 6.3
C372	1-163-038-00	s	CERAMIC, CHIP 0.1uF 25V
C373	1-135-166-21	s	TANTALUM, CHIP 47uF 10% 10V
C374	1-162-970-11	s	CERAMIC, CHIP 0.01uF 10% 25V
C375	1-162-970-11	s	CERAMIC, CHIP 0.01uF 10% 25V
CN11	1-566-096-11	s	CONNECTOR, BB 12P, MALE
IC23	8-759-030-55	s	IC MC1496M
L87	1-408-785-21	s	INDUCTOR CHIP 47UH
L88	1-408-785-21	s	INDUCTOR CHIP 47UH
Q141	8-729-120-28	s	TRANSISTOR 2SC1623-L5L6
Q142	8-729-905-18	s	TRANSISTOR DTC144EU
Q143	8-729-905-18	s	TRANSISTOR DTC144EU
Q144	8-729-120-28	s	TRANSISTOR 2SC1623-L5L6
R464	1-216-837-11	s	METAL, CHIP 22K 5% 1/16W
R465	1-216-837-11	s	METAL, CHIP 22K 5% 1/16W
R466	1-216-845-11	s	METAL, CHIP 100K 5% 1/16W
R467	1-216-833-11	s	METAL, CHIP 10K 5% 1/16W
R468	1-216-821-11	s	METAL, CHIP 1K 5% 1/16W
R469	1-216-821-11	s	METAL, CHIP 1K 5% 1/16W
R470	1-218-289-11	s	METAL, CHIP 510 5% 1/16W
R471	1-216-829-11	s	METAL, CHIP 4.7K 5% 1/16W
R472	1-216-829-11	s	METAL, CHIP 4.7K 5% 1/16W
R473	1-218-289-11	s	METAL, CHIP 510 5% 1/16W
R474	1-216-821-11	s	METAL, CHIP 1K 5% 1/16W
R475	1-216-821-11	s	METAL, CHIP 1K 5% 1/16W
R476	1-218-272-11	s	METAL, CHIP 5.1K 5% 1/16W
R477	1-216-825-11	s	METAL, CHIP 2.2K 5% 1/16W
R478	1-216-825-11	s	METAL, CHIP 2.2K 5% 1/16W
R479	1-216-809-11	s	METAL, CHIP 100 5% 1/16W
R480	1-216-825-11	s	METAL, CHIP 2.2K 5% 1/16W
R709	1-216-821-11	s	METAL, CHIP 1K 5% 1/16W
RV18	1-241-262-11	s	RES, ADJ, CERMET 2K
RV19	1-241-262-11	s	RES, ADJ, CERMET 2K
RV20	1-241-262-11	s	RES, ADJ, CERMET 2K
RV21	1-241-261-11	s	RES, ADJ, CERMET 1K

CR-41 BOARD

Ref. No. or Q'ty	Part No.	SP	Description
1pc	A-8276-244-A	o	MOUNTED CIRCUIT BOARD, CR-41
C422	1-162-970-11	s	CERAMIC, CHIP 0.01uF 10% 25V
C423	1-135-165-11	s	TANTALUM 33uF 20% 16V
C424	1-135-165-11	s	TANTALUM 33uF 20% 16V
C425	1-135-166-21	s	TANTALUM, CHIP 47uF 10% 10V
C427	1-135-227-11	s	TANTAL 100uF 20% 6.3
C428	1-135-227-11	s	TANTAL 100uF 20% 6.3
C429	1-163-038-00	s	CERAMIC, CHIP 0.1uF 25V
C430	1-135-166-21	s	TANTALUM, CHIP 47uF 10% 10V
C431	1-163-035-00	s	CERAMIC, CHIP 0.047uF 50V
C432	1-162-970-11	s	CERAMIC, CHIP 0.01uF 10% 25V
C433	1-135-165-11	s	TANTALUM 33uF 20% 16V
C434	1-163-038-00	s	CERAMIC, CHIP 0.1uF 25V
C435	1-164-346-11	s	CERAMIC 1uF 16V
CN12	1-566-096-11	s	CONNECTOR, BB 12P, MALE
IC29	8-759-030-55	s	IC MC1496M
L96	1-410-389-31	s	INDUCTOR CHIP 47UH
L97	1-410-389-31	s	INDUCTOR CHIP 47UH
Q156	8-729-120-28	s	TRANSISTOR 2SC1623-L5L6
Q157	8-729-905-18	s	TRANSISTOR DTC144EU
Q158	8-729-905-18	s	TRANSISTOR DTC144EU
Q159	8-729-120-28	s	TRANSISTOR 2SC1623-L5L6
Q160	8-729-120-28	s	TRANSISTOR 2SC1623-L5L6
Q161	8-729-120-28	s	TRANSISTOR 2SC1623-L5L6
R528	1-216-837-11	s	METAL, CHIP 22K 5% 1/16W
R529	1-216-837-11	s	METAL, CHIP 22K 5% 1/16W
R530	1-216-845-11	s	METAL, CHIP 100K 5% 1/16W
R531	1-216-833-11	s	METAL, CHIP 10K 5% 1/16W
R532	1-216-821-11	s	METAL, CHIP 1K 5% 1/16W
R533	1-216-821-11	s	METAL, CHIP 1K 5% 1/16W
R534	1-216-829-11	s	METAL, CHIP 4.7K 5% 1/16W
R535	1-218-289-11	s	METAL, CHIP 510 5% 1/16W
R536	1-216-829-11	s	METAL, CHIP 4.7K 5% 1/16W
R537	1-218-289-11	s	METAL, CHIP 510 5% 1/16W
R538	1-216-821-11	s	METAL, CHIP 1K 5% 1/16W
R539	1-216-821-11	s	METAL, CHIP 1K 5% 1/16W
R540	1-218-272-11	s	METAL, CHIP 5.1K 5% 1/16W
R541	1-216-825-11	s	METAL, CHIP 2.2K 5% 1/16W
R542	1-216-825-11	s	METAL, CHIP 2.2K 5% 1/16W
R543	1-216-809-11	s	METAL, CHIP 100 5% 1/16W
R544	1-216-825-11	s	METAL, CHIP 2.2K 5% 1/16W
R545	1-216-821-11	s	METAL, CHIP 1K 5% 1/16W
R546	1-216-823-11	s	METAL, CHIP 1.5K 5% 1/16W
R547	1-216-825-11	s	METAL, CHIP 2.2K 5% 1/16W
R548	1-216-809-11	s	METAL, CHIP 100 5% 1/16W
R707	1-216-821-11	s	METAL, CHIP 1K 5% 1/16W
R708	1-216-809-11	s	METAL, CHIP 100 5% 1/16W
R787	1-216-809-11	s	METAL, CHIP 100 5% 1/16W
RV23	1-241-262-11	s	RES, ADJ, CERMET 2K
RV24	1-241-262-11	s	RES, ADJ, CERMET 2K
RV25	1-241-262-11	s	RES, ADJ, CERMET 2K
RV26	1-241-261-11	s	RES, ADJ, CERMET 1K
RV27	1-241-261-11	s	RES, ADJ, CERMET 1K

DC-57 BOARD

Ref. No. or Q'ty	Part No.	SP	Description
1pc	1-643-015-12	o	PRINTED CIRCUIT BOARD, DC-57
2pcs	7-621-759-65	s	SCREW +PSW 2.6X8
1pc	3-334-236-01	s	SHEET, INSULATING
1pc	2-371-561-00	s	BUSHING (P), INSULATING
1pc	7-682-947-01	s	SCREW +PSW 3X6
C1	1-124-898-11	s	ELECT 4700uF 20% 16V
C2	1-124-360-00	s	ELECT 1000uF 20% 16V
C3	1-124-360-00	s	ELECT 1000uF 20% 16V
C4	1-124-472-11	s	ELECT 470uF 20% 10V
C5	1-161-055-00	s	CERAMIC 0.022uF 10% 50V
C6	1-161-055-00	s	CERAMIC 0.022uF 10% 50V
C7	1-124-477-11	s	ELECT 47uF 20% 25V
C8	1-124-477-11	s	ELECT 47uF 20% 25V
C9	1-126-931-11	s	ELECT 10000uF 20% 10V
CN261	1-564-210-00	o	CONNECTOR, IL-S 12P, MALE
CN262	1-564-706-11	o	CONNECTOR, 4P, MALE
CN263	1-564-708-11	o	CONNECTOR 6P, MALE
CN264	1-564-710-11	s	PIN HEADER, STRAIGHT 8P
CN265	1-564-209-00	o	CONNECTOR, IL-S 10P, MALE
D1	8-719-200-02	s	DIODE 10E2
FB1	1-410-858-11	o	INDUCTOR 0UH
FB2	1-410-858-11	o	INDUCTOR 0UH
FB3	1-410-858-11	o	INDUCTOR 0UH
IC1	8-759-982-05	s	IC RC7805FA
Q1	8-729-382-64	s	TRANSISTOR 2SC1826-G
R1	⚠1-215-907-11	s	METAL, CHIP 22 10% 3W

DD-12 BOARD

Ref. No. or Q'ty	Part No.	SP	Description
1pc	A-7061-772-A	o	MOUNTED CIRCUIT BOARD, DD-12
1pc	1-535-699-11	s	CABLE, JUMPER 23P
C301	1-124-472-11	s	ELECT 470uF 20% 10V
CN751	1-506-489-11	o	CONNECTOR 10P, MALE
CN752	1-506-491-11	o	CONNECTOR 12P, MALE
D1	8-719-911-19	s	DIODE 1SS119
D321	8-719-911-19	s	DIODE 1SS119
IC2	8-759-645-16	s	IC M54516P
IC3	8-759-645-16	s	IC M54516P
Q308	8-729-903-02	s	TRANSISTOR DTA143XS
Q309	8-729-903-02	s	TRANSISTOR DTA143XS
Q310	8-729-903-02	s	TRANSISTOR DTA143XS
Q311	8-729-903-02	s	TRANSISTOR DTA143XS
Q312	8-729-903-02	s	TRANSISTOR DTA143XS
Q313	8-729-903-02	s	TRANSISTOR DTA143XS
Q314	8-729-903-02	s	TRANSISTOR DTA143XS
R366	1-249-402-11	s	CARBON 56 5% 1/4W
R367	1-249-402-11	s	CARBON 56 5% 1/4W
R368	1-249-402-11	s	CARBON 56 5% 1/4W
R369	1-249-402-11	s	CARBON 56 5% 1/4W
R370	1-249-402-11	s	CARBON 56 5% 1/4W
R371	1-249-402-11	s	CARBON 56 5% 1/4W
R372	1-249-402-11	s	CARBON 56 5% 1/4W
S1009	1-516-995-00	s	SWITCH, LEVER SLIDE
S1010	1-552-539-00	s	SWITCH, PUSH

DM-87 BOARD : S/N 10031-10340

Ref. No. or Q'ty	Part No.	SP	Description
1pc	A-8271-226-A	o	MOUNTED CIRCUIT BOARD, DM-87
2pcs	2-251-622-11	s	LEVER, PC BOARD
C1	1-126-233-11	s	ELECT 22uF 20% 50V
C2	1-162-970-11	s	CERAMIC, CHIP 0.01uF 10% 25V
C3	1-162-970-11	s	CERAMIC, CHIP 0.01uF 10% 25V
C5	1-163-035-00	s	CERAMIC, CHIP 0.047uF 50V
C6	1-162-928-11	s	CERAMIC, CHIP 120PF 5% 50V
C7	1-162-958-11	s	CERAMIC, CHIP 270PF 5% 50V
C8	1-162-921-11	s	CERAMIC, CHIP 33PF 5% 50V
C9	1-163-145-00	s	CERAMIC, CHIP 0.0015uF 5% 50V
C10	1-162-958-11	s	CERAMIC, CHIP 270PF 5% 50V
C11	1-163-035-00	s	CERAMIC, CHIP 0.047uF 50V
C14	1-163-035-00	s	CERAMIC, CHIP 0.047uF 50V
C15	1-162-923-11	s	CERAMIC, CHIP 47PF 5% 50V
C16	1-162-922-11	s	CERAMIC, CHIP 39PF 5% 50V
C17	1-162-926-11	s	CERAMIC, CHIP 82PF 5% 50V
C18	1-162-923-11	s	CERAMIC, CHIP 47PF 5% 50V
C19	1-162-922-11	s	CERAMIC, CHIP 39PF 5% 50V
C20	1-162-970-11	s	CERAMIC, CHIP 0.01uF 10% 25V
C33	1-162-970-11	s	CERAMIC, CHIP 0.01uF 10% 25V
C34	1-124-907-11	s	ELECT 10uF 20% 50V
C35	1-162-970-11	s	CERAMIC, CHIP 0.01uF 10% 25V
C36	1-162-970-11	s	CERAMIC, CHIP 0.01uF 10% 25V
C37	1-135-166-21	s	TANTALUM, CHIP 47uF 10% 10V
C38	1-135-166-21	s	TANTALUM, CHIP 47uF 10% 10V
C39	1-163-038-00	s	CERAMIC, CHIP 0.1uF 25V
C40	1-162-970-11	s	CERAMIC, CHIP 0.01uF 10% 25V
C41	1-162-970-11	s	CERAMIC, CHIP 0.01uF 10% 25V
C42	1-163-145-00	s	CERAMIC, CHIP 0.0015uF 5% 50V
C43	1-163-038-00	s	CERAMIC, CHIP 0.1uF 25V
C44	1-162-924-11	s	CERAMIC 56PF 5% 50V
C45	1-162-928-11	s	CERAMIC, CHIP 120PF 5% 50V
C46	1-164-816-11	s	CERAMIC, CHIP 220PF 2% 50V
C47	1-162-959-11	s	CERAMIC, CHIP 330PF 5% 50V
C48	1-164-383-11	s	CERAMIC, CHIP 110PF 5% 50V
C49	1-164-392-11	s	CERAMIC, CHIP 390PF 5% 50V
C50	1-164-238-11	s	CERAMIC, CHIP 36PF 10% 50V
C51	1-164-466-11	s	CERAMIC, CHIP 240PF 5% 50V
C52	1-162-970-11	s	CERAMIC, CHIP 0.01uF 10% 25V
C54	1-162-920-11	s	CERAMIC, CHIP 27PF 5% 50V
C56	1-164-393-11	s	CERAMIC, CHIP 430PF 5% 50V
C59	1-162-970-11	s	CERAMIC, CHIP 0.01uF 10% 25V
C60	1-163-038-00	s	CERAMIC, CHIP 0.1uF 25V
C62	1-162-970-11	s	CERAMIC, CHIP 0.01uF 10% 25V
C63	1-162-923-11	s	CERAMIC, CHIP 47PF 5% 50V
C64	1-162-923-11	s	CERAMIC, CHIP 47PF 5% 50V
C65	1-162-970-11	s	CERAMIC, CHIP 0.01uF 10% 25V
C66	1-162-970-11	s	CERAMIC, CHIP 0.01uF 10% 25V
C67	1-162-923-11	s	CERAMIC, CHIP 47PF 5% 50V
C68	1-162-923-11	s	CERAMIC, CHIP 47PF 5% 50V
C69	1-162-970-11	s	CERAMIC, CHIP 0.01uF 10% 25V
C70	1-162-970-11	s	CERAMIC, CHIP 0.01uF 10% 25V
C72	1-135-166-21	s	TANTALUM, CHIP 47uF 10% 10V
C74	1-162-970-11	s	CERAMIC, CHIP 0.01uF 10% 25V
C75	1-162-915-11	s	CERAMIC, CHIP 10PF 50V
C76	1-162-970-11	s	CERAMIC, CHIP 0.01uF 10% 25V
C77	1-162-923-11	s	CERAMIC, CHIP 47PF 5% 50V
C78	1-163-035-00	s	CERAMIC, CHIP 0.047uF 50V

(DM-87 BOARD : S/N 10031-10340)

Ref. No. or Q'ty	Part No.	SP	Description
C79	1-162-911-11	s	CERAMIC, CHIP 6PF 50V
C80	1-162-919-11	s	CERAMIC, CHIP 22PF 5% 50V
C81	1-162-925-11	s	CERAMIC, CHIP 68PF 5% 50V
C82	1-162-970-11	s	CERAMIC, CHIP 0.01uF 10% 25V
C83	1-124-477-11	s	ELECT 47uF 20% 25V
C84	1-162-912-11	s	CERAMIC 7PF 50V
C85	1-163-035-00	s	CERAMIC, CHIP 0.047uF 50V
C86	1-162-915-11	s	CERAMIC, CHIP 10PF 50V
C88	1-164-160-11	s	CERAMIC, CHIP 20PF 5% 50V
C89	1-163-035-00	s	CERAMIC, CHIP 0.047uF 50V
C90	1-163-035-00	s	CERAMIC, CHIP 0.047uF 50V
C91	1-162-970-11	s	CERAMIC, CHIP 0.01uF 10% 25V
C92	1-163-035-00	s	CERAMIC, CHIP 0.047uF 50V
C93	1-164-227-11	s	CERAMIC, CHIP 0.022uF 10% 25V
C94	1-162-916-11	s	CERAMIC, CHIP 12PF 5% 50V
C96	1-162-970-11	s	CERAMIC, CHIP 0.01uF 10% 25V
C97	1-163-035-00	s	CERAMIC, CHIP 0.047uF 50V
C98	1-162-912-11	s	CERAMIC 7PF 50V
C98	1-162-918-11	s	CERAMIC, CHIP 18PF 5% 50V
C99	1-162-918-11	s	CERAMIC, CHIP 18PF 5% 50V
C100	1-163-035-00	s	CERAMIC, CHIP 0.047uF 50V
C101	1-163-035-00	s	CERAMIC, CHIP 0.047uF 50V
C110	1-162-970-11	s	CERAMIC, CHIP 0.01uF 10% 25V
C111	1-162-970-11	s	CERAMIC, CHIP 0.01uF 10% 25V
C145	1-162-926-11	s	CERAMIC, CHIP 82PF 5% 50V
C146	1-124-126-00	s	ELECT 47uF 20% 25V
C148	1-162-913-11	s	CERAMIC 8PF 50V
C149	1-164-376-11	s	CERAMIC, CHIP 11PF 5% 50V
C150	1-162-921-11	s	CERAMIC, CHIP 33PF 5% 50V
C151	1-162-921-11	s	CERAMIC, CHIP 33PF 5% 50V
C152	1-124-126-00	s	ELECT 47uF 20% 25V
C153	1-124-126-00	s	ELECT 47uF 20% 25V
C154	1-124-126-00	s	ELECT 47uF 20% 25V
C155	1-128-057-11	s	ELECT 330uF 20% 6.3V
C156	1-128-057-11	s	ELECT 330uF 20% 6.3V
C157	1-162-970-11	s	CERAMIC, CHIP 0.01uF 10% 25V
C158	1-162-970-11	s	CERAMIC, CHIP 0.01uF 10% 25V
C159	1-124-126-00	s	ELECT 47uF 20% 25V
C160	1-124-126-00	s	ELECT 47uF 20% 25V
C161	1-162-970-11	s	CERAMIC, CHIP 0.01uF 10% 25V
C162	1-162-970-11	s	CERAMIC, CHIP 0.01uF 10% 25V
C166	1-162-913-11	s	CERAMIC 8PF 50V
C167	1-162-917-11	s	CERAMIC, CHIP 15PF 5% 50V
C168	1-162-921-11	s	CERAMIC, CHIP 33PF 5% 50V
C169	1-162-925-11	s	CERAMIC, CHIP 68PF 5% 50V
C170	1-164-376-11	s	CERAMIC, CHIP 11PF 5% 50V
C171	1-164-185-11	s	CERAMIC, CHIP 13PF 5% 50V
C172	1-162-921-11	s	CERAMIC, CHIP 33PF 5% 50V
C173	1-162-925-11	s	CERAMIC, CHIP 68PF 5% 50V
C174	1-124-126-00	s	ELECT 47uF 20% 25V
C175	1-124-126-00	s	ELECT 47uF 20% 25V
C176	1-162-970-11	s	CERAMIC, CHIP 0.01uF 10% 25V
C177	1-162-970-11	s	CERAMIC, CHIP 0.01uF 10% 25V
C178	1-128-057-11	s	ELECT 330uF 20% 6.3V
C179	1-128-057-11	s	ELECT 330uF 20% 6.3V
C199	1-124-126-00	s	ELECT 47uF 20% 25V
C200	1-124-907-11	s	ELECT 10uF 20% 50V
C201	1-162-970-11	s	CERAMIC, CHIP 0.01uF 10% 25V
C202	1-162-970-11	s	CERAMIC, CHIP 0.01uF 10% 25V

(DM-87 BOARD : S/N 10031-10340)

Ref. No. or Q'ty	Part No.	SP	Description
C203	1-124-443-00	s	ELECT 100uF 20% 10V
C204	1-124-443-00	s	ELECT 100uF 20% 10V
C228	1-162-970-11	s	CERAMIC, CHIP 0.01uF 10% 25V
C229	1-124-477-11	s	ELECT 47uF 20% 25V
C230	1-164-346-11	s	CERAMIC 1uF 16V
C231	1-124-126-00	s	ELECT 47uF 20% 25V
C232	1-162-970-11	s	CERAMIC, CHIP 0.01uF 10% 25V
C233	1-162-970-11	s	CERAMIC, CHIP 0.01uF 10% 25V
C234	1-124-126-00	s	ELECT 47uF 20% 25V
C235	1-163-038-00	s	CERAMIC, CHIP 0.1uF 25V
C236	1-124-126-00	s	ELECT 47uF 20% 25V
C237	1-162-970-11	s	CERAMIC, CHIP 0.01uF 10% 25V
C238	1-162-970-11	s	CERAMIC, CHIP 0.01uF 10% 25V
C239	1-124-907-11	s	ELECT 10uF 20% 50V
C240	1-162-923-11	s	CERAMIC, CHIP 47PF 5% 50V
C241	1-162-927-11	s	CERAMIC, CHIP 100PF 5% 50V
C242	1-124-907-11	s	ELECT 10uF 20% 50V
C243	1-164-346-11	s	CERAMIC 1uF 16V
C244	1-162-970-11	s	CERAMIC, CHIP 0.01uF 10% 25V
C245	1-124-126-00	s	ELECT 47uF 20% 25V
C246	1-124-126-00	s	ELECT 47uF 20% 25V
C247	1-162-970-11	s	CERAMIC, CHIP 0.01uF 10% 25V
C248	1-163-038-00	s	CERAMIC, CHIP 0.1uF 25V
C249	1-124-126-00	s	ELECT 47uF 20% 25V
C250	1-162-970-11	s	CERAMIC, CHIP 0.01uF 10% 25V
C251	1-162-970-11	s	CERAMIC, CHIP 0.01uF 10% 25V
C252	1-124-907-11	s	ELECT 10uF 20% 50V
C253	1-162-921-11	s	CERAMIC, CHIP 33PF 5% 50V
C254	1-124-907-11	s	ELECT 10uF 20% 50V
C255	1-162-970-11	s	CERAMIC, CHIP 0.01uF 10% 25V
C256	1-124-477-11	s	ELECT 47uF 20% 25V
C257	1-163-038-00	s	CERAMIC, CHIP 0.1uF 25V
C258	1-164-005-11	s	CERAMIC, CHIP 0.47uF 25V
C259	1-163-034-00	s	CERAMIC, CHIP 0.033uF 50V
C260	1-124-907-11	s	ELECT 10uF 20% 50V
C261	1-163-137-00	s	CERAMIC, CHIP 680PF 5% 50V
C262	1-163-035-00	s	CERAMIC, CHIP 0.047uF 50V
C263	1-162-970-11	s	CERAMIC, CHIP 0.01uF 10% 25V
C264	1-124-443-00	s	ELECT 100uF 20% 10V
C265	1-162-970-11	s	CERAMIC, CHIP 0.01uF 10% 25V
C266	1-124-443-00	s	ELECT 100uF 20% 10V
C267	1-124-443-00	s	ELECT 100uF 20% 10V
C268	1-162-970-11	s	CERAMIC, CHIP 0.01uF 10% 25V
C269	1-162-970-11	s	CERAMIC, CHIP 0.01uF 10% 25V
C270	1-135-159-21	s	TANTALUM, CHIP 10uF 10% 20V
C271	1-164-491-11	s	CERAMIC 300PF 5% 50V
C273	1-162-959-11	s	CERAMIC, CHIP 330PF 5% 50V
C274	1-164-392-11	s	CERAMIC, CHIP 390PF 5% 50V
C275	1-162-921-11	s	CERAMIC, CHIP 33PF 5% 50V
C276	1-135-180-21	s	TANTALUM 33uF 10% 10V
C277	1-135-180-21	s	TANTALUM 33uF 10% 10V
C278	1-135-159-21	s	TANTALUM, CHIP 10uF 10% 20V
C279	1-124-907-11	s	ELECT 10uF 20% 50V
C280	1-164-005-11	s	CERAMIC, CHIP 0.47uF 25V
C281	1-162-970-11	s	CERAMIC, CHIP 0.01uF 10% 25V
C282	1-162-970-11	s	CERAMIC, CHIP 0.01uF 10% 25V
C283	1-124-443-00	s	ELECT 100uF 20% 10V
C284	1-124-907-11	s	ELECT 10uF 20% 50V
C285	1-162-970-11	s	CERAMIC, CHIP 0.01uF 10% 25V

(DM-87 BOARD : S/N 10031-10340)

Ref. No. or Q'ty	Part No.	SP	Description
C286	1-126-233-11	s	ELECT 22uF 20% 50V
C287	1-126-233-11	s	ELECT 22uF 20% 50V
C288	1-128-057-11	s	ELECT 330uF 20% 6.3V
C289	1-128-057-11	s	ELECT 330uF 20% 6.3V
C290	1-162-970-11	s	CERAMIC, CHIP 0.01uF 10% 25V
C291	1-162-970-11	s	CERAMIC, CHIP 0.01uF 10% 25V
C293	1-162-917-11	s	CERAMIC, CHIP 15PF 5% 50V
C294	1-135-166-21	s	TANTALUM, CHIP 47uF 10% 10V
C296	1-135-166-21	s	TANTALUM, CHIP 47uF 10% 10V
C297	1-162-921-11	s	CERAMIC, CHIP 33PF 5% 50V
C298	1-135-227-11	s	TANTAL 100uF 20% 6.3V
C299	1-135-227-11	s	TANTAL 100uF 20% 6.3V
C300	1-162-916-11	s	CERAMIC, CHIP 12PF 5% 50V
C303	1-135-165-11	s	TANTALUM 33uF 20% 16V
C304	1-135-165-11	s	TANTALUM 33uF 20% 16V
C305	1-162-970-11	s	CERAMIC, CHIP 0.01uF 10% 25V
C306	1-162-970-11	s	CERAMIC, CHIP 0.01uF 10% 25V
C307	1-135-166-21	s	TANTALUM, CHIP 47uF 10% 10V
C308	1-135-166-21	s	TANTALUM, CHIP 47uF 10% 10V
C309	1-162-970-11	s	CERAMIC, CHIP 0.01uF 10% 25V
C310	1-162-970-11	s	CERAMIC, CHIP 0.01uF 10% 25V
C311	1-164-378-11	s	CERAMIC, CHIP 30PF 5% 50V
C312	1-124-126-00	s	ELECT 47uF 20% 25V
C314	1-135-166-21	s	TANTALUM, CHIP 47uF 10% 10V
C316	1-162-924-11	s	CERAMIC 56PF 5% 50V
C321	1-162-970-11	s	CERAMIC, CHIP 0.01uF 10% 25V
C322	1-162-970-11	s	CERAMIC, CHIP 0.01uF 10% 25V
C323	1-135-166-21	s	TANTALUM, CHIP 47uF 10% 10V
C324	1-135-166-21	s	TANTALUM, CHIP 47uF 10% 10V
C325	1-124-126-00	s	ELECT 47uF 20% 25V
C326	1-162-970-11	s	CERAMIC, CHIP 0.01uF 10% 25V
C327	1-162-970-11	s	CERAMIC, CHIP 0.01uF 10% 25V
C328	1-124-126-00	s	ELECT 47uF 20% 25V
C329	1-124-126-00	s	ELECT 47uF 20% 25V
C330	1-162-970-11	s	CERAMIC, CHIP 0.01uF 10% 25V
C331	1-163-215-00	s	CERAMIC, CHIP 0.0027uF 5% 50V
C333	1-124-907-11	s	ELECT 10uF 20% 50V
C334	1-162-970-11	s	CERAMIC, CHIP 0.01uF 10% 25V
C365	1-162-970-11	s	CERAMIC, CHIP 0.01uF 10% 25V
C366	1-135-165-11	s	TANTALUM 33uF 20% 16V
C367	1-135-165-11	s	TANTALUM 33uF 20% 16V
C368	1-135-166-21	s	TANTALUM, CHIP 47uF 10% 10V
C369	1-164-346-11	s	CERAMIC 1uF 16V
C370	1-135-227-11	s	TANTAL 100uF 20% 6.3V
C371	1-135-227-11	s	TANTAL 100uF 20% 6.3V
C372	1-163-038-00	s	CERAMIC, CHIP 0.1uF 25V
C373	1-135-166-21	s	TANTALUM, CHIP 47uF 10% 10V
C374	1-162-970-11	s	CERAMIC, CHIP 0.01uF 10% 25V
C375	1-162-970-11	s	CERAMIC, CHIP 0.01uF 10% 25V
C376	1-135-165-11	s	TANTALUM 33uF 20% 16V
C379	1-164-217-11	s	CERAMIC, CHIP 150PF 5% 50V
C380	1-162-970-11	s	CERAMIC, CHIP 0.01uF 10% 25V
C381	1-162-970-11	s	CERAMIC, CHIP 0.01uF 10% 25V
C382	1-162-970-11	s	CERAMIC, CHIP 0.01uF 10% 25V
C383	1-162-970-11	s	CERAMIC, CHIP 0.01uF 10% 25V
C385	1-162-919-11	s	CERAMIC, CHIP 22PF 5% 50V
C386	1-124-477-11	s	ELECT 47uF 20% 25V
C387	1-162-970-11	s	CERAMIC, CHIP 0.01uF 10% 25V
C388	1-162-923-11	s	CERAMIC, CHIP 47PF 5% 50V

(DM-87 BOARD : S/N 10031-10340)

Ref. No. or Q'ty	Part No.	SP	Description
C389	1-124-907-11	s	ELECT 10uF 20% 50V
C390	1-162-970-11	s	CERAMIC, CHIP 0.01uF 10% 25V
C391	1-162-970-11	s	CERAMIC, CHIP 0.01uF 10% 25V
C392	1-124-477-11	s	ELECT 47uF 20% 25V
C393	1-162-919-11	s	CERAMIC, CHIP 22PF 5% 50V
C394	1-162-912-11	s	CERAMIC 7PF 50V
C395	1-163-038-00	s	CERAMIC, CHIP 0.1uF 25V
C396	1-162-924-11	s	CERAMIC 56PF 5% 50V
C398	1-162-970-11	s	CERAMIC, CHIP 0.01uF 10% 25V
C399	1-162-919-11	s	CERAMIC, CHIP 22PF 5% 50V
C400	1-124-903-11	s	ELECT 1uF 20% 50V
C401	1-162-970-11	s	CERAMIC, CHIP 0.01uF 10% 25V
C402	1-124-477-11	s	ELECT 47uF 20% 25V
C403	1-162-970-11	s	CERAMIC, CHIP 0.01uF 10% 25V
C404	1-164-227-11	s	CERAMIC, CHIP 0.022uF 10% 25V
C405	1-162-959-11	s	CERAMIC, CHIP 330PF 5% 50V
C406	1-162-970-11	s	CERAMIC, CHIP 0.01uF 10% 25V
C407	1-135-176-21	s	TANTALUM, CHIP 0.68uF 20% 35V
C408	1-135-091-00	s	TANTALUN, CHIP 1uF 10% 16V
C409	1-162-970-11	s	CERAMIC, CHIP 0.01uF 10% 25V
C410	1-162-970-11	s	CERAMIC, CHIP 0.01uF 10% 25V
C412	1-124-126-00	s	ELECT 47uF 20% 25V
C413	1-124-126-00	s	ELECT 47uF 20% 25V
C414	1-162-970-11	s	CERAMIC, CHIP 0.01uF 10% 25V
C415	1-162-970-11	s	CERAMIC, CHIP 0.01uF 10% 25V
C416	1-124-126-00	s	ELECT 47uF 20% 25V
C417	1-162-970-11	s	CERAMIC, CHIP 0.01uF 10% 25V
C418	1-162-970-11	s	CERAMIC, CHIP 0.01uF 10% 25V
C419	1-124-126-00	s	ELECT 47uF 20% 25V
C420	1-162-970-11	s	CERAMIC, CHIP 0.01uF 10% 25V
C421	1-162-970-11	s	CERAMIC, CHIP 0.01uF 10% 25V
C422	1-162-970-11	s	CERAMIC, CHIP 0.01uF 10% 25V
C423	1-135-165-11	s	TANTALUM 33uF 20% 16V
C424	1-135-165-11	s	TANTALUM 33uF 20% 16V
C425	1-135-166-21	s	TANTALUM, CHIP 47uF 10% 10V
C427	1-135-227-11	s	TANTAL 100uF 20% 6.3V
C428	1-135-227-11	s	TANTAL 100uF 20% 6.3V
C429	1-163-038-00	s	CERAMIC, CHIP 0.1uF 25V
C430	1-135-166-21	s	TANTALUM, CHIP 47uF 10% 10V
C431	1-163-035-00	s	CERAMIC, CHIP 0.047uF 50V
C432	1-162-970-11	s	CERAMIC, CHIP 0.01uF 10% 25V
C433	1-135-165-11	s	TANTALUM 33uF 20% 16V
C434	1-163-038-00	s	CERAMIC, CHIP 0.1uF 25V
C435	1-164-346-11	s	CERAMIC 1uF 16V
C436	1-163-035-00	s	CERAMIC, CHIP 0.047uF 50V
C437	1-124-126-00	s	ELECT 47uF 20% 25V
C438	1-124-126-00	s	ELECT 47uF 20% 25V
C439	1-162-970-11	s	CERAMIC, CHIP 0.01uF 10% 25V
C440	1-162-970-11	s	CERAMIC, CHIP 0.01uF 10% 25V
C441	1-163-035-00	s	CERAMIC, CHIP 0.047uF 50V
C442	1-162-923-11	s	CERAMIC, CHIP 47PF 5% 50V
C452	1-163-035-00	s	CERAMIC, CHIP 0.047uF 50V
C453	1-164-385-11	s	CERAMIC, CHIP 160PF 5% 50V
C454	1-135-166-21	s	TANTALUM, CHIP 47uF 10% 10V
C455	1-164-363-11	s	CERAMIC, CHIP 560PF 5% 50V
C456	1-135-166-21	s	TANTALUM, CHIP 47uF 10% 10V
C457	1-162-970-11	s	CERAMIC, CHIP 0.01uF 10% 25V
C701	1-135-227-11	s	TANTAL 100uF 20% 6.3V
C702	1-135-227-11	s	TANTAL 100uF 20% 6.3V

(DM-87 BOARD : S/N 10031-10340)

Ref. No. or Q'ty	Part No.	SP	Description
C703	1-162-912-11	s	CERAMIC 7PF 50V
C704	1-164-378-11	s	CERAMIC, CHIP 30PF 5% 50V
C705	1-162-970-11	s	CERAMIC, CHIP 0.01uF 10% 25V
C706	1-162-970-11	s	CERAMIC, CHIP 0.01uF 10% 25V
C707	1-162-923-11	s	CERAMIC, CHIP 47PF 5% 50V
C708	1-124-126-00	s	ELECT 47uF 20% 25V
C709	1-162-970-11	s	CERAMIC, CHIP 0.01uF 10% 25V
C710	1-124-477-11	s	ELECT 47uF 20% 25V
C711	1-162-923-11	s	CERAMIC, CHIP 47PF 5% 50V
C712	1-128-057-11	s	ELECT 330uF 20% 6.3V
C713	1-128-057-11	s	ELECT 330uF 20% 6.3V
C714	1-128-057-11	s	ELECT 330uF 20% 6.3V
C715	1-128-057-11	s	ELECT 330uF 20% 6.3V
C717	1-162-921-11	s	CERAMIC, CHIP 33PF 5% 50V
C718	1-162-923-11	s	CERAMIC, CHIP 47PF 5% 50V
C719	1-163-275-11	s	CERAMIC, CHIP 0.001uF 5% 50V
C720	1-162-970-11	s	CERAMIC, CHIP 0.01uF 10% 25V
C721	1-126-233-11	s	ELECT 22uF 20% 50V
C722	1-162-970-11	s	CERAMIC, CHIP 0.01uF 10% 25V
C723	1-126-233-11	s	ELECT 22uF 20% 50V
C724	1-135-227-11	s	TANTAL 100uF 20% 6.3V
C724	1-162-968-11	s	CERAMIC, CHIP 0.0047uF 10% 50V
C725	1-135-227-11	s	TANTAL 100uF 20% 6.3V
C725	1-162-970-11	s	CERAMIC, CHIP 0.01uF 10% 25V
C726	1-164-185-11	s	CERAMIC, CHIP 13PF 5% 50V
C727	1-107-206-00	s	MICA 15PF 5% 500V
C727	1-162-919-11	s	CERAMIC, CHIP 22PF 5% 50V
CN1	1-564-317-11	o	CONNECTOR, BB 5P, MALE
CN2	1-564-317-11	o	CONNECTOR, BB 5P, MALE
CN7	1-566-095-11	o	CONNECTOR, BB 11P, MALE
CN8	1-566-095-11	o	CONNECTOR, BB 11P, MALE
CN9	1-566-095-11	o	CONNECTOR, BB 11P, MALE
CN10	1-566-095-11	o	CONNECTOR, BB 11P, MALE
CN11	1-566-096-11	s	CONNECTOR, BB 12P, MALE
CN12	1-566-096-11	s	CONNECTOR, BB 12P, MALE
CN607	1-573-782-21	o	CONNECTOR, PHEC 60P, MALE
CN608	1-573-782-21	o	CONNECTOR, PHEC 60P, MALE
CT1	1-141-404-11	s	CAP, TRIMMER 30PF
CT2	1-141-404-11	s	CAP, TRIMMER 30PF
CT3	1-141-345-11	s	CAP, TRIMMER 40PF
D1	8-719-941-86	s	DIODE DAN202U
D2	8-719-941-86	s	DIODE DAN202U
D5	8-719-941-86	s	DIODE DAN202U
D6	8-719-800-76	s	DIODE 1SS226
D7	8-719-941-86	s	DIODE DAN202U
D8	8-719-941-86	s	DIODE DAN202U
D12	8-719-941-86	s	DIODE DAN202U
D701	8-719-941-86	s	DIODE DAN202U
D702	8-719-941-09	s	DIODE DAP202U
D704	8-719-941-86	s	DIODE DAN202U
D705	8-719-941-86	s	DIODE DAN202U
D706	8-719-941-86	s	DIODE DAN202U
D707	8-719-941-86	s	DIODE DAN202U
D900	8-719-911-19	s	DIODE 1SS119
DL1	1-415-403-21	s	DELAY LINE 1uS
FL2	1-236-757-21	s	FILTER, LOW-PASS (C)
FL3	1-236-773-21	s	FILTER, LOW-PASS (Y)

(DM-87 BOARD : S/N 10031-10340)

Ref. No. or Q'ty	Part No.	SP	Description
FL4	1-236-716-11	s	FILTER, LOW-PASS
FL5	1-236-774-11	s	FILTER, LOW-PASS (Y)
FL7	1-236-575-11	s	FILTER, BAND PASS (PAL-M)
FL8	1-567-306-11	s	RESONATOR, CERAMIC
FL9	1-236-146-11	s	FILTER, BAND PASS 3.68MHz
IC3	8-759-998-32	s	IC CXD2107M
IC4	8-759-710-86	s	IC NJM2233BM-T1
IC5	8-759-925-60	s	IC BA401
IC6	8-759-710-86	s	IC NJM2233BM-T1
IC9	8-759-710-86	s	IC NJM2233BM-T1
IC10	8-759-710-86	s	IC NJM2233BM-T1
IC12	8-752-015-81	s	IC CX20158
IC15	8-752-332-68	s	IC CXL5502M
IC16	8-752-332-68	s	IC CXL5502M
IC17	8-752-054-62	s	IC CXA1207AR
IC18	8-759-710-86	s	IC NJM2233BM-T1
IC19	8-759-239-34	s	IC TC74HC4538AF
IC23	8-759-030-55	s	IC MC1496M
IC24	8-759-710-86	s	IC NJM2233BM-T1
IC25	8-752-051-40	s	IC CXA1208R
IC26	8-759-925-74	s	IC TC74HC04NS
IC27	8-759-708-05	s	IC NJM78L05A
IC28	8-759-700-65	s	IC NJM79L05A
IC29	8-759-030-55	s	IC MC1496M
IC31	8-759-925-74	s	IC TC74HC04NS
IC701	8-759-710-86	s	IC NJM2233BM-T1
IC702	8-759-925-90	s	IC SN74HC74NS
L1	1-408-785-21	s	INDUCTOR, CHIP 47UH
L2	1-410-387-11	s	INDUCTOR, CHIP 33uH
L3	1-412-280-31	s	INDUCTOR, CHIP 330UH
L4	1-410-167-41	s	INDUCTOR, CHIP 820UH
L5	1-410-657-21	s	INDUCTOR, CHIP 180uH
L7	1-410-374-11	s	INDUCTOR, CHIP 2.7uH
L8	1-410-379-31	s	INDUCTOR, CHIP 6.8UH
L9	1-410-379-31	s	INDUCTOR, CHIP 6.8UH
L10	1-410-379-31	s	INDUCTOR, CHIP 6.8UH
L12	1-408-785-21	s	INDUCTOR, CHIP 47UH
L13	1-408-785-21	s	INDUCTOR, CHIP 47UH
L14	1-408-785-21	s	INDUCTOR, CHIP 47UH
L15	1-408-798-00	s	INDUCTOR, CHIP 1mmH
L16	1-410-389-31	s	INDUCTOR, CHIP 47UH
L17	1-410-391-11	s	INDUCTOR, CHIP 68uH
L18	1-410-392-11	s	INDUCTOR, CHIP 82uH
L19	1-410-392-11	s	INDUCTOR, CHIP 82uH
L23	1-408-785-21	s	INDUCTOR, CHIP 47UH
L25	1-410-381-11	s	INDUCTOR, CHIP 10UH
L26	1-410-383-31	s	INDUCTOR, CHIP 15uH
L27	1-408-785-21	s	INDUCTOR, CHIP 47UH
L28	1-410-384-31	s	INDUCTOR, CHIP 18UH
L29	1-412-282-41	s	INDUCTOR, CHIP 470UH
L30	1-412-282-41	s	INDUCTOR, CHIP 470UH
L31	1-410-384-31	s	INDUCTOR, CHIP 18UH
L42	1-410-385-11	s	INDUCTOR, CHIP 22uH
L43	1-410-381-11	s	INDUCTOR, CHIP 10UH
L44	1-408-785-21	s	INDUCTOR, CHIP 47UH
L45	1-408-785-21	s	INDUCTOR, CHIP 47UH
L46	1-410-381-11	s	INDUCTOR, CHIP 10UH
L47	1-410-384-31	s	INDUCTOR, CHIP 18UH

(DM-87 BOARD : S/N 10031-10340)

Ref. No. or Q'ty	Part No.	SP	Description
L48	1-408-785-21	s	INDUCTOR, CHIP 47UH
L49	1-408-785-21	s	INDUCTOR, CHIP 47UH
L52	1-410-381-11	s	INDUCTOR, CHIP 10UH
L53	1-410-381-11	s	INDUCTOR, CHIP 10UH
L56	1-408-785-21	s	INDUCTOR, CHIP 47UH
L57	1-408-785-21	s	INDUCTOR, CHIP 47UH
L61	1-408-785-21	s	INDUCTOR, CHIP 47UH
L62	1-408-777-00	s	INDUCTOR, CHIP 10uH
L63	1-408-777-00	s	INDUCTOR, CHIP 10uH
L64	1-408-777-00	s	INDUCTOR, CHIP 10uH
L65	1-408-777-00	s	INDUCTOR, CHIP 10uH
L66	1-408-785-21	s	INDUCTOR, CHIP 47UH
L67	1-408-785-21	s	INDUCTOR, CHIP 47UH
L68	1-410-379-31	s	INDUCTOR, CHIP 6.8UH
L69	1-408-785-21	s	INDUCTOR, CHIP 47UH
L70	1-408-785-21	s	INDUCTOR, CHIP 47UH
L72	1-410-387-11	s	INDUCTOR, CHIP 33uH
L73	1-410-383-31	s	INDUCTOR, CHIP 15uH
L80	1-408-785-21	s	INDUCTOR, CHIP 47UH
L81	1-408-785-21	s	INDUCTOR, CHIP 47UH
L82	1-408-785-21	s	INDUCTOR, CHIP 47UH
L87	1-408-785-21	s	INDUCTOR, CHIP 47UH
L88	1-408-785-21	s	INDUCTOR, CHIP 47UH
L89	1-408-785-21	s	INDUCTOR, CHIP 47UH
L90	1-410-392-11	s	INDUCTOR, CHIP 82uH
L91	1-410-385-11	s	INDUCTOR, CHIP 22uH
L92	1-410-385-11	s	INDUCTOR, CHIP 22uH
L93	1-408-785-21	s	INDUCTOR, CHIP 47UH
L94	1-408-785-21	s	INDUCTOR, CHIP 47UH
L95	1-408-785-21	s	INDUCTOR, CHIP 47UH
L96	1-410-389-31	s	INDUCTOR, CHIP 47UH
L97	1-410-389-31	s	INDUCTOR, CHIP 47UH
L98	1-408-785-21	s	INDUCTOR, CHIP 47UH
L99	1-408-785-21	s	INDUCTOR, CHIP 47UH
L701	1-410-386-11	s	INDUCTOR, CHIP 27uH
L702	1-408-785-21	s	INDUCTOR, CHIP 47UH
L703	1-408-785-21	s	INDUCTOR, CHIP 47UH
L704	1-408-785-21	s	INDUCTOR, CHIP 47UH
L705	1-408-785-21	s	INDUCTOR, CHIP 47UH
L706	1-408-785-21	s	INDUCTOR, CHIP 47UH
L707	1-408-785-21	s	INDUCTOR, CHIP 47UH
L708	1-408-785-21	s	INDUCTOR, CHIP 47UH
L709	1-410-385-11	s	INDUCTOR, CHIP 22uH
L709	1-410-655-31	s	INDUCTOR, CHIP 120uH
Q1	8-729-102-07	s	TRANSISTOR 2SC2223-F13
Q2	8-729-102-07	s	TRANSISTOR 2SC2223-F13
Q3	8-729-102-07	s	TRANSISTOR 2SC2223-F13
Q4	8-729-102-07	s	TRANSISTOR 2SC2223-F13
Q5	8-729-102-07	s	TRANSISTOR 2SC2223-F13
Q6	8-729-905-18	s	TRANSISTOR DTC144EU
Q7	8-729-102-07	s	TRANSISTOR 2SC2223-F13
Q8	8-729-905-18	s	TRANSISTOR DTC144EU
Q9	8-729-905-12	s	TRANSISTOR DTA144EU
Q10	8-729-102-07	s	TRANSISTOR 2SC2223-F13
Q11	8-729-905-18	s	TRANSISTOR DTC144EU
Q13	8-729-120-28	s	TRANSISTOR 2SC1623-L5L6
Q14	8-729-905-12	s	TRANSISTOR DTA144EU
Q15	8-729-905-18	s	TRANSISTOR DTC144EU
Q16	8-729-905-12	s	TRANSISTOR DTA144EU

(DM-87 BOARD : S/N 10031-10340)

Ref. No. or Q'ty	Part No.	SP	Description
Q17	8-729-905-18	s	TRANSISTOR DTC144EU
Q18	8-729-905-12	s	TRANSISTOR DTA144EU
Q19	8-729-905-18	s	TRANSISTOR DTC144EU
Q20	8-729-905-12	s	TRANSISTOR DTA144EU
Q21	8-729-905-18	s	TRANSISTOR DTC144EU
Q22	8-729-905-12	s	TRANSISTOR DTA144EU
Q23	8-729-905-18	s	TRANSISTOR DTC144EU
Q24	8-729-905-12	s	TRANSISTOR DTA144EU
Q25	8-729-905-18	s	TRANSISTOR DTC144EU
Q26	8-729-120-28	s	TRANSISTOR 2SC1623-L5L6
Q27	8-729-120-28	s	TRANSISTOR 2SC1623-L5L6
Q28	8-729-905-18	s	TRANSISTOR DTC144EU
Q29	8-729-120-28	s	TRANSISTOR 2SC1623-L5L6
Q30	8-729-120-28	s	TRANSISTOR 2SC1623-L5L6
Q31	8-729-120-28	s	TRANSISTOR 2SC1623-L5L6
Q33	8-729-905-23	s	TRANSISTOR 2SA1576-R
Q34	8-729-202-38	s	TRANSISTOR 2SC3326N
Q35	8-729-202-38	s	TRANSISTOR 2SC3326N
Q36	8-729-120-28	s	TRANSISTOR 2SC1623-L5L6
Q37	8-729-120-28	s	TRANSISTOR 2SC1623-L5L6
Q38	8-729-120-28	s	TRANSISTOR 2SC1623-L5L6
Q39	8-729-120-28	s	TRANSISTOR 2SC1623-L5L6
Q40	8-729-120-28	s	TRANSISTOR 2SC1623-L5L6
Q41	8-729-120-28	s	TRANSISTOR 2SC1623-L5L6
Q42	8-729-120-28	s	TRANSISTOR 2SC1623-L5L6
Q43	8-729-905-18	s	TRANSISTOR DTC144EU
Q44	8-729-905-18	s	TRANSISTOR DTC144EU
Q46	8-729-202-38	s	TRANSISTOR 2SC3326N
Q48	8-729-120-28	s	TRANSISTOR 2SC1623-L5L6
Q49	8-729-120-28	s	TRANSISTOR 2SC1623-L5L6
Q50	8-729-905-12	s	TRANSISTOR DTA144EU
Q51	8-729-120-28	s	TRANSISTOR 2SC1623-L5L6
Q52	8-729-905-18	s	TRANSISTOR DTC144EU
Q53	8-729-120-28	s	TRANSISTOR 2SC1623-L5L6
Q54	8-729-903-10	s	TRANSISTOR FMW1
Q55	8-729-903-97	s	TRANSISTOR FMS1FE
Q56	8-729-120-28	s	TRANSISTOR 2SC1623-L5L6
Q57	8-729-120-28	s	TRANSISTOR 2SC1623-L5L6
Q58	8-729-903-10	s	TRANSISTOR FMW1
Q70	8-729-202-38	s	TRANSISTOR 2SC3326N
Q71	8-729-230-49	s	TRANSISTOR 2SC2712-YG
Q72	8-729-102-07	s	TRANSISTOR 2SC2223-F13
Q73	8-729-102-07	s	TRANSISTOR 2SC2223-F13
Q74	8-729-102-07	s	TRANSISTOR 2SC2223-F13
Q75	8-729-102-07	s	TRANSISTOR 2SC2223-F13
Q76	8-729-120-28	s	TRANSISTOR 2SC1623-L5L6
Q77	8-729-230-49	s	TRANSISTOR 2SC2712-YG
Q78	8-729-102-07	s	TRANSISTOR 2SC2223-F13
Q80	8-729-102-07	s	TRANSISTOR 2SC2223-F13
Q81	8-729-102-07	s	TRANSISTOR 2SC2223-F13
Q82	8-729-905-23	s	TRANSISTOR 2SA1576-R
Q83	8-729-905-23	s	TRANSISTOR 2SA1576-R
Q84	8-729-230-49	s	TRANSISTOR 2SC2712-YG
Q101	8-729-905-23	s	TRANSISTOR 2SA1576-R
Q102	8-729-120-28	s	TRANSISTOR 2SC1623-L5L6
Q103	8-729-120-28	s	TRANSISTOR 2SC1623-L5L6
Q104	8-729-905-18	s	TRANSISTOR DTC144EU
Q105	8-729-905-23	s	TRANSISTOR 2SA1576-R
Q106	8-729-120-28	s	TRANSISTOR 2SC1623-L5L6

(DM-87 BOARD : S/N 10031-10340)

Ref. No. or Q'ty	Part No.	SP	Description
Q107	8-729-905-18	s	TRANSISTOR DTC144EU
Q108	8-729-202-38	s	TRANSISTOR 2SC3326N
Q109	8-729-202-38	s	TRANSISTOR 2SC3326N
Q110	8-729-120-28	s	TRANSISTOR 2SC1623-L5L6
Q111	8-729-905-18	s	TRANSISTOR DTC144EU
Q112	8-729-102-07	s	TRANSISTOR 2SC2223-F13
Q113	8-729-102-07	s	TRANSISTOR 2SC2223-F13
Q114	8-729-230-49	s	TRANSISTOR 2SC2712-YG
Q115	8-729-120-28	s	TRANSISTOR 2SC1623-L5L6
Q116	8-729-230-49	s	TRANSISTOR 2SC2712-YG
Q117	8-729-230-49	s	TRANSISTOR 2SC2712-YG
Q118	8-729-120-28	s	TRANSISTOR 2SC1623-L5L6
Q119	8-729-102-07	s	TRANSISTOR 2SC2223-F13
Q120	8-729-905-23	s	TRANSISTOR 2SA1576-R
Q121	8-729-230-49	s	TRANSISTOR 2SC2712-YG
Q122	8-729-102-07	s	TRANSISTOR 2SC2223-F13
Q123	8-729-230-49	s	TRANSISTOR 2SC2712-YG
Q124	8-729-120-28	s	TRANSISTOR 2SC1623-L5L6
Q125	8-729-230-49	s	TRANSISTOR 2SC2712-YG
Q126	8-729-230-49	s	TRANSISTOR 2SC2712-YG
Q127	8-729-102-07	s	TRANSISTOR 2SC2223-F13
Q130	8-729-905-23	s	TRANSISTOR 2SA1576-R
Q131	8-729-120-28	s	TRANSISTOR 2SC1623-L5L6
Q132	8-729-120-28	s	TRANSISTOR 2SC1623-L5L6
Q133	8-729-120-28	s	TRANSISTOR 2SC1623-L5L6
Q141	8-729-120-28	s	TRANSISTOR 2SC1623-L5L6
Q142	8-729-905-18	s	TRANSISTOR DTC144EU
Q143	8-729-905-18	s	TRANSISTOR DTC144EU
Q144	8-729-120-28	s	TRANSISTOR 2SC1623-L5L6
Q145	8-729-120-28	s	TRANSISTOR 2SC1623-L5L6
Q146	8-729-120-28	s	TRANSISTOR 2SC1623-L5L6
Q148	8-729-230-49	s	TRANSISTOR 2SC2712-YG
Q149	8-729-120-28	s	TRANSISTOR 2SC1623-L5L6
Q150	8-729-120-28	s	TRANSISTOR 2SC1623-L5L6
Q152	8-729-120-28	s	TRANSISTOR 2SC1623-L5L6
Q154	8-729-120-28	s	TRANSISTOR 2SC1623-L5L6
Q156	8-729-120-28	s	TRANSISTOR 2SC1623-L5L6
Q157	8-729-905-18	s	TRANSISTOR DTC144EU
Q158	8-729-905-18	s	TRANSISTOR DTC144EU
Q159	8-729-120-28	s	TRANSISTOR 2SC1623-L5L6
Q160	8-729-120-28	s	TRANSISTOR 2SC1623-L5L6
Q161	8-729-120-28	s	TRANSISTOR 2SC1623-L5L6
Q162	8-729-102-07	s	TRANSISTOR 2SC2223-F13
Q163	8-729-102-07	s	TRANSISTOR 2SC2223-F13
Q164	8-729-102-07	s	TRANSISTOR 2SC2223-F13
Q165	8-729-102-07	s	TRANSISTOR 2SC2223-F13
Q166	8-729-120-28	s	TRANSISTOR 2SC1623-L5L6
Q167	8-729-905-18	s	TRANSISTOR DTC144EU
Q170	8-729-202-38	s	TRANSISTOR 2SC3326N
Q175	8-729-905-12	s	TRANSISTOR DTA144EU
Q701	8-729-905-23	s	TRANSISTOR 2SA1576-R
Q701	8-729-120-28	s	TRANSISTOR 2SC1623-L5L6
Q702	8-729-120-28	s	TRANSISTOR 2SC1623-L5L6
Q703	8-729-905-12	s	TRANSISTOR DTA144EU
Q703	8-729-905-23	s	TRANSISTOR 2SA1576-R
Q704	8-729-202-38	s	TRANSISTOR 2SC3326N
Q706	8-729-905-12	s	TRANSISTOR DTA144EU
Q707	8-729-905-18	s	TRANSISTOR DTC144EU
Q708	8-729-905-23	s	TRANSISTOR 2SA1576-R

(DM-87 BOARD : S/N 10031-10340)

Ref. No. or Q'ty	Part No.	SP	Description
Q709	8-729-120-28	s	TRANSISTOR 2SC1623-L5L6
Q712	8-729-202-38	s	TRANSISTOR 2SC3326N
Q900	8-729-201-05	s	TRANSISTOR 2SC2878-B
Q901	8-729-900-89	s	TRANSISTOR DTC144ES
R1	1-216-837-11	s	METAL, CHIP 22K 5% 1/16W
R2	1-216-837-11	s	METAL, CHIP 22K 5% 1/16W
R3	1-216-821-11	s	METAL, CHIP 1K 5% 1/16W
R4	1-216-820-11	s	METAL, CHIP 820 5% 1/16W
R5	1-216-821-11	s	METAL, CHIP 1K 5% 1/16W
R6	1-216-829-11	s	METAL, CHIP 4.7K 5% 1/16W
R7	1-216-841-11	s	METAL, CHIP 47K 5% 1/16W
R8	1-218-672-11	s	METAL, CHIP 150 0.50% 1/16W
R9	1-216-833-11	s	METAL, CHIP 10K 5% 1/16W
R10	1-216-833-11	s	METAL, CHIP 10K 5% 1/16W
R11	1-218-698-11	s	METAL, CHIP 1.8K 0.50% 1/16W
R12	1-218-680-11	s	METAL, CHIP 330 0.50% 1/16W
R13	1-216-812-11	s	METAL, CHIP 180 5% 1/16W
R14	1-216-864-11	s	METAL, CHIP 0 5% 1/16W
R15	1-216-837-11	s	METAL, CHIP 22K 5% 1/16W
R16	1-216-837-11	s	METAL, CHIP 22K 5% 1/16W
R17	1-216-864-11	s	METAL, CHIP 0 5% 1/16W
R18	1-216-821-11	s	METAL, CHIP 1K 5% 1/16W
R19	1-216-809-11	s	METAL, CHIP 100 5% 1/16W
R20	1-216-817-11	s	METAL, CHIP 470 5% 1/16W
R21	1-216-837-11	s	METAL, CHIP 22K 5% 1/16W
R22	1-216-837-11	s	METAL, CHIP 22K 5% 1/16W
R23	1-218-680-11	s	METAL, CHIP 330 0.50% 1/16W
R24	1-216-817-11	s	METAL, CHIP 470 5% 1/16W
R25	1-216-817-11	s	METAL, CHIP 470 5% 1/16W
R26	1-218-680-11	s	METAL, CHIP 330 0.50% 1/16W
R27	1-218-313-11	s	METAL, CHIP 560 1% 1/16W
R28	1-216-821-11	s	METAL, CHIP 1K 5% 1/16W
R29	1-216-809-11	s	METAL, CHIP 100 5% 1/16W
R30	1-216-833-11	s	METAL, CHIP 10K 5% 1/16W
R31	1-216-833-11	s	METAL, CHIP 10K 5% 1/16W
R44	1-216-833-11	s	METAL, CHIP 10K 5% 1/16W
R45	1-216-833-11	s	METAL, CHIP 10K 5% 1/16W
R47	1-216-864-11	s	METAL, CHIP 0 5% 1/16W
R48	1-216-820-11	s	METAL, CHIP 820 5% 1/16W
R49	1-216-809-11	s	METAL, CHIP 100 5% 1/16W
R50	1-216-815-11	s	METAL, CHIP 330 5% 1/16W
R51	1-216-815-11	s	METAL, CHIP 330 5% 1/16W
R52	1-216-815-11	s	METAL, CHIP 330 5% 1/16W
R53	1-216-815-11	s	METAL, CHIP 330 5% 1/16W
R54	1-216-815-11	s	METAL, CHIP 330 5% 1/16W
R55	1-216-815-11	s	METAL, CHIP 330 5% 1/16W
R56	1-216-833-11	s	METAL, CHIP 10K 5% 1/16W
R57	1-216-821-11	s	METAL, CHIP 1K 5% 1/16W
R58	1-216-821-11	s	METAL, CHIP 1K 5% 1/16W
R59	1-216-823-11	s	METAL, CHIP 1.5K 5% 1/16W
R60	1-218-672-11	s	METAL, CHIP 150 0.50% 1/16W
R61	1-218-271-11	s	METAL, CHIP 2K 5% 1/16W
R62	1-216-827-11	s	METAL, CHIP 3.3K 5% 1/16W
R63	1-218-289-11	s	METAL, CHIP 510 5% 1/16W
R64	1-216-865-11	s	METAL, CHIP 3K 5% 1/16W
R65	1-218-289-11	s	METAL, CHIP 510 5% 1/16W
R66	1-216-838-11	s	METAL, CHIP 27K 5% 1/16W
R67	1-216-837-11	s	METAL, CHIP 22K 5% 1/16W
R69	1-218-289-11	s	METAL, CHIP 510 5% 1/16W

(DM-87 BOARD : S/N 10031-10340)

Ref. No. or Q'ty	Part No.	SP	Description
R70	1-216-817-11	s	METAL, CHIP 470 5% 1/16W
R71	1-218-289-11	s	METAL, CHIP 510 5% 1/16W
R73	1-216-821-11	s	METAL, CHIP 1K 5% 1/16W
R74	1-218-457-11	s	METAL, CHIP 910 5% 1/16W
R75	1-218-289-11	s	METAL, CHIP 510 5% 1/16W
R80	1-216-821-11	s	METAL, CHIP 1K 5% 1/16W
R81	1-216-839-11	s	METAL, CHIP 33K 5% 1/16W
R82	1-216-839-11	s	METAL, CHIP 33K 5% 1/16W
R83	1-216-821-11	s	METAL, CHIP 1K 5% 1/16W
R84	1-216-820-11	s	METAL, CHIP 820 5% 1/16W
R85	1-216-827-11	s	METAL, CHIP 3.3K 5% 1/16W
R86	1-216-838-11	s	METAL, CHIP 27K 5% 1/16W
R87	1-216-837-11	s	METAL, CHIP 22K 5% 1/16W
R88	1-216-864-11	s	METAL, CHIP 0 5% 1/16W
R89	1-218-289-11	s	METAL, CHIP 510 5% 1/16W
R90	1-216-817-11	s	METAL, CHIP 470 5% 1/16W
R91	1-216-825-11	s	METAL, CHIP 2.2K 5% 1/16W
R92	1-216-838-11	s	METAL, CHIP 27K 5% 1/16W
R93	1-216-837-11	s	METAL, CHIP 22K 5% 1/16W
R94	1-216-864-11	s	METAL, CHIP 0 5% 1/16W
R95	1-216-817-11	s	METAL, CHIP 470 5% 1/16W
R96	1-216-825-11	s	METAL, CHIP 2.2K 5% 1/16W
R98	1-216-820-11	s	METAL, CHIP 820 5% 1/16W
R99	1-216-809-11	s	METAL, CHIP 100 5% 1/16W
R100	1-216-833-11	s	METAL, CHIP 10K 5% 1/16W
R101	1-216-833-11	s	METAL, CHIP 10K 5% 1/16W
R104	1-218-289-11	s	METAL, CHIP 510 5% 1/16W
R105	1-216-829-11	s	METAL, CHIP 4.7K 5% 1/16W
R106	1-216-829-11	s	METAL, CHIP 4.7K 5% 1/16W
R107	1-216-833-11	s	METAL, CHIP 10K 5% 1/16W
R108	1-216-833-11	s	METAL, CHIP 10K 5% 1/16W
R109	1-216-822-11	s	METAL, CHIP 1.2K 5% 1/16W
R110	1-216-814-11	s	METAL, CHIP 270 5% 1/16W
R111	1-216-837-11	s	METAL, CHIP 22K 5% 1/16W
R112	1-216-837-11	s	METAL, CHIP 22K 5% 1/16W
R113	1-216-821-11	s	METAL, CHIP 1K 5% 1/16W
R114	1-216-821-11	s	METAL, CHIP 1K 5% 1/16W
R115	1-216-833-11	s	METAL, CHIP 10K 5% 1/16W
R116	1-216-841-11	s	METAL, CHIP 47K 5% 1/16W
R117	1-216-841-11	s	METAL, CHIP 47K 5% 1/16W
R118	1-216-821-11	s	METAL, CHIP 1K 5% 1/16W
R119	1-216-821-11	s	METAL, CHIP 1K 5% 1/16W
R120	1-216-833-11	s	METAL, CHIP 10K 5% 1/16W
R121	1-216-833-11	s	METAL, CHIP 10K 5% 1/16W
R122	1-216-815-11	s	METAL, CHIP 330 5% 1/16W
R123	1-216-814-11	s	METAL, CHIP 270 5% 1/16W
R125	1-218-670-11	s	METAL, CHIP 120 0.50% 1/16W
R128	1-216-835-11	s	METAL, CHIP 15K 5% 1/16W
R130	1-216-822-11	s	METAL, CHIP 1.2K 5% 1/16W
R131	1-216-817-11	s	METAL, CHIP 470 5% 1/16W
R132	1-216-831-11	s	METAL, CHIP 6.8K 5% 1/16W
R133	1-216-827-11	s	METAL, CHIP 3.3K 5% 1/16W
R134	1-216-833-11	s	METAL, CHIP 10K 5% 1/16W
R135	1-216-833-11	s	METAL, CHIP 10K 5% 1/16W
R136	1-218-313-11	s	METAL, CHIP 560 1% 1/16W
R137	1-218-680-11	s	METAL, CHIP 330 0.50% 1/16W
R138	1-216-820-11	s	METAL, CHIP 820 5% 1/16W
R139	1-216-833-11	s	METAL, CHIP 10K 5% 1/16W
R140	1-216-833-11	s	METAL, CHIP 10K 5% 1/16W

(DM-87 BOARD : S/N 10031-10340)

Ref. No. or Q'ty	Part No.	SP	Description
R141	1-216-821-11	s	METAL, CHIP 1K 5% 1/16W
R142	1-216-809-11	s	METAL, CHIP 100 5% 1/16W
R143	1-216-831-11	s	METAL, CHIP 6.8K 5% 1/16W
R144	1-216-838-11	s	METAL, CHIP 27K 5% 1/16W
R199	1-216-809-11	s	METAL, CHIP 100 5% 1/16W
R200	1-216-841-11	s	METAL, CHIP 47K 5% 1/16W
R201	1-216-833-11	s	METAL, CHIP 10K 5% 1/16W
R202	1-216-821-11	s	METAL, CHIP 1K 5% 1/16W
R205	1-216-821-11	s	METAL, CHIP 1K 5% 1/16W
R206	1-216-823-11	s	METAL, CHIP 1.5K 5% 1/16W
R207	1-216-825-11	s	METAL, CHIP 2.2K 5% 1/16W
R208	1-218-289-11	s	METAL, CHIP 510 5% 1/16W
R209	1-218-706-11	s	METAL, CHIP 3.9K 0.50% 1/16W
R210	1-218-651-11	s	METAL, CHIP 20 0.50% 1/16W
R211	1-216-817-11	s	METAL, CHIP 470 5% 1/16W
R212	1-218-289-11	s	METAL, CHIP 510 5% 1/16W
R213	1-216-825-11	s	METAL, CHIP 2.2K 5% 1/16W
R214	1-216-817-11	s	METAL, CHIP 470 5% 1/16W
R215	1-216-825-11	s	METAL, CHIP 2.2K 5% 1/16W
R217	1-218-657-11	s	METAL, CHIP 36 5% 1/16W
R218	1-216-804-11	s	METAL, CHIP 39 5% 1/16W
R219	1-216-837-11	s	METAL, CHIP 22K 5% 1/16W
R220	1-216-837-11	s	METAL, CHIP 22K 5% 1/16W
R221	1-216-825-11	s	METAL, CHIP 2.2K 5% 1/16W
R222	1-216-833-11	s	METAL, CHIP 10K 5% 1/16W
R223	1-216-821-11	s	METAL, CHIP 1K 5% 1/16W
R224	1-216-815-11	s	METAL, CHIP 330 5% 1/16W
R227	1-216-823-11	s	METAL, CHIP 1.5K 5% 1/16W
R229	1-216-827-11	s	METAL, CHIP 3.3K 5% 1/16W
R230	1-216-827-11	s	METAL, CHIP 3.3K 5% 1/16W
R231	1-218-289-11	s	METAL, CHIP 510 5% 1/16W
R232	1-218-289-11	s	METAL, CHIP 510 5% 1/16W
R233	1-218-706-11	s	METAL, CHIP 3.9K 0.50% 1/16W
R234	1-218-344-11	s	METAL, CHIP 7.5K 0.50% 1/16W
R235	1-218-289-11	s	METAL, CHIP 510 5% 1/16W
R236	1-218-289-11	s	METAL, CHIP 510 5% 1/16W
R237	1-216-825-11	s	METAL, CHIP 2.2K 5% 1/16W
R238	1-216-825-11	s	METAL, CHIP 2.2K 5% 1/16W
R240	1-216-827-11	s	METAL, CHIP 3.3K 5% 1/16W
R241	1-216-809-11	s	METAL, CHIP 100 5% 1/16W
R262	1-216-833-11	s	METAL, CHIP 10K 5% 1/16W
R263	1-216-837-11	s	METAL, CHIP 22K 5% 1/16W
R264	1-216-837-11	s	METAL, CHIP 22K 5% 1/16W
R265	1-216-833-11	s	METAL, CHIP 10K 5% 1/16W
R266	1-216-809-11	s	METAL, CHIP 100 5% 1/16W
R268	1-216-803-11	s	METAL, CHIP 33 5% 1/16W
R299	1-216-857-11	s	METAL, CHIP 1M 5% 1/16W
R300	1-216-821-11	s	METAL, CHIP 1K 5% 1/16W
R301	1-216-844-11	s	METAL, CHIP 82K 5% 1/16W
R302	1-216-864-11	s	METAL, CHIP 0 5% 1/16W
R303	1-216-839-11	s	METAL, CHIP 33K 5% 1/16W
R304	1-216-842-11	s	METAL, CHIP 56K 5% 1/16W
R305	1-215-409-00	s	METAL 330 1% 1/6W
R306	1-216-821-11	s	METAL, CHIP 1K 5% 1/16W
R307	1-216-821-11	s	METAL, CHIP 1K 5% 1/16W
R308	1-218-700-11	s	METAL, CHIP 2.2K 0.50% 1/16W
R309	1-218-700-11	s	METAL, CHIP 2.2K 0.50% 1/16W
R310	1-216-821-11	s	METAL, CHIP 1K 5% 1/16W
R311	1-216-821-11	s	METAL, CHIP 1K 5% 1/16W

(DM-87 BOARD : S/N 10031-10340)

Ref. No. or Q'ty	Part No.	SP	Description
R312	1-216-825-11	s	METAL, CHIP 2.2K 5% 1/16W
R313	1-216-853-11	s	METAL, CHIP 470K 5% 1/16W
R314	1-216-857-11	s	METAL, CHIP 1M 5% 1/16W
R315	1-216-821-11	s	METAL, CHIP 1K 5% 1/16W
R316	1-216-844-11	s	METAL, CHIP 82K 5% 1/16W
R317	1-216-864-11	s	METAL, CHIP 0 5% 1/16W
R318	1-216-839-11	s	METAL, CHIP 33K 5% 1/16W
R319	1-216-842-11	s	METAL, CHIP 56K 5% 1/16W
R320	1-216-817-11	s	METAL, CHIP 470 5% 1/16W
R321	1-216-821-11	s	METAL, CHIP 1K 5% 1/16W
R322	1-216-826-11	s	METAL, CHIP 2.7K 5% 1/16W
R323	1-218-700-11	s	METAL, CHIP 2.2K 0.50% 1/16W
R324	1-218-700-11	s	METAL, CHIP 2.2K 0.50% 1/16W
R325	1-216-825-11	s	METAL, CHIP 2.2K 5% 1/16W
R327	1-218-740-11	s	METAL, CHIP 100K 0.50% 1/16W
R328	1-216-864-11	s	METAL, CHIP 0 5% 1/16W
R329	1-216-815-11	s	METAL, CHIP 330 5% 1/16W
R330	1-216-853-11	s	METAL, CHIP 470K 5% 1/16W
R331	1-216-820-11	s	METAL, CHIP 820 5% 1/16W
R332	1-218-313-11	s	METAL, CHIP 560 1% 1/16W
R333	1-216-839-11	s	METAL, CHIP 33K 5% 1/16W
R334	1-216-821-11	s	METAL, CHIP 1K 5% 1/16W
R335	1-216-837-11	s	METAL, CHIP 22K 5% 1/16W
R336	1-216-834-11	s	METAL, CHIP 12K 5% 1/16W
R337	1-216-837-11	s	METAL, CHIP 22K 5% 1/16W
R338	1-216-845-11	s	METAL, CHIP 100K 5% 1/16W
R339	1-216-833-11	s	METAL, CHIP 10K 5% 1/16W
R340	1-216-845-11	s	METAL, CHIP 100K 5% 1/16W
R341	1-218-732-11	s	METAL, CHIP 47K 0.50% 1/16W
R342	1-216-822-11	s	METAL, CHIP 1.2K 5% 1/16W
R343	1-218-705-11	s	METAL, CHIP 3.6K 0.50% 1/16W
R344	1-216-856-11	s	METAL, CHIP 820K 5% 1/16W
R345	1-216-841-11	s	METAL, CHIP 47K 5% 1/16W
R345	1-216-841-11	s	METAL, CHIP 47K 5% 1/16W
R346	1-216-841-11	s	METAL, CHIP 47K 5% 1/16W
R347	1-216-816-11	s	METAL, CHIP 390 5% 1/16W
R348	1-216-817-11	s	METAL, CHIP 470 5% 1/16W
R349	1-216-841-11	s	METAL, CHIP 47K 5% 1/16W
R350	1-216-841-11	s	METAL, CHIP 47K 5% 1/16W
R351	1-216-841-11	s	METAL, CHIP 47K 5% 1/16W
R352	1-216-841-11	s	METAL, CHIP 47K 5% 1/16W
R353	1-216-816-11	s	METAL, CHIP 390 5% 1/16W
R354	1-216-853-11	s	METAL, CHIP 470K 5% 1/16W
R355	1-218-700-11	s	METAL, CHIP 2.2K 0.50% 1/16W
R357	1-216-841-11	s	METAL, CHIP 47K 5% 1/16W
R358	1-216-838-11	s	METAL, CHIP 27K 5% 1/16W
R359	1-216-833-11	s	METAL, CHIP 10K 5% 1/16W
R360	1-216-809-11	s	METAL, CHIP 100 5% 1/16W
R361	1-216-821-11	s	METAL, CHIP 1K 5% 1/16W
R362	1-218-288-11	s	METAL, CHIP 300 5% 1/16W
R364	1-218-288-11	s	METAL, CHIP 300 5% 1/16W
R365	1-216-809-11	s	METAL, CHIP 100 5% 1/16W
R366	1-216-825-11	s	METAL, CHIP 2.2K 5% 1/16W
R367	1-216-821-11	s	METAL, CHIP 1K 5% 1/16W
R368	1-218-706-11	s	METAL, CHIP 3.9K 0.50% 1/16W
R369	1-216-821-11	s	METAL, CHIP 1K 5% 1/16W
R370	1-216-833-11	s	METAL, CHIP 10K 5% 1/16W
R371	1-218-285-11	s	METAL, CHIP 75 5% 1/16W
R372	1-216-820-11	s	METAL, CHIP 820 5% 1/16W

(DM-87 BOARD : S/N 10031-10340)

Ref. No. or Q'ty	Part No.	SP	Description
R373	1-216-833-11	s	METAL, CHIP 10K 5% 1/16W
R374	1-216-833-11	s	METAL, CHIP 10K 5% 1/16W
R375	1-216-821-11	s	METAL, CHIP 1K 5% 1/16W
R376	1-218-700-11	s	METAL, CHIP 2.2K 0.50% 1/16W
R377	1-218-295-11	s	METAL, CHIP 4.3K 5% 1/16W
R379	1-216-829-11	s	METAL, CHIP 4.7K 5% 1/16W
R380	1-216-838-11	s	METAL, CHIP 27K 5% 1/16W
R381	1-216-837-11	s	METAL, CHIP 22K 5% 1/16W
R382	1-218-883-11	s	METAL, CHIP 33K 0.50 1/16W
R383	1-216-817-11	s	METAL, CHIP 470 5% 1/16W
R384	1-216-817-11	s	METAL, CHIP 470 5% 1/16W
R385	1-218-482-11	s	METAL, CHIP 430 5% 1/16W
R387	1-216-864-11	s	METAL, CHIP 0 5% 1/16W
R388	1-216-821-11	s	METAL, CHIP 1K 5% 1/16W
R389	1-216-825-11	s	METAL, CHIP 2.2K 5% 1/16W
R391	1-216-825-11	s	METAL, CHIP 2.2K 5% 1/16W
R392	1-216-809-11	s	METAL, CHIP 100 5% 1/16W
R393	1-216-809-11	s	METAL, CHIP 100 5% 1/16W
R394	1-216-827-11	s	METAL, CHIP 3.3K 5% 1/16W
R395	1-218-313-11	s	METAL, CHIP 560 1% 1/16W
R396	1-218-704-11	s	METAL, CHIP 3.3K 0.50% 1/16W
R397	1-216-833-11	s	METAL, CHIP 10K 5% 1/16W
R398	1-216-821-11	s	METAL, CHIP 1K 5% 1/16W
R399	1-216-833-11	s	METAL, CHIP 10K 5% 1/16W
R400	1-218-285-11	s	METAL, CHIP 75 5% 1/16W
R401	1-216-820-11	s	METAL, CHIP 820 5% 1/16W
R402	1-216-833-11	s	METAL, CHIP 10K 5% 1/16W
R403	1-216-833-11	s	METAL, CHIP 10K 5% 1/16W
R404	1-216-821-11	s	METAL, CHIP 1K 5% 1/16W
R405	1-218-700-11	s	METAL, CHIP 2.2K 0.50% 1/16W
R406	1-218-704-11	s	METAL, CHIP 3.3K 0.50% 1/16W
R408	1-216-829-11	s	METAL, CHIP 4.7K 5% 1/16W
R409	1-216-838-11	s	METAL, CHIP 27K 5% 1/16W
R410	1-216-837-11	s	METAL, CHIP 22K 5% 1/16W
R412	1-216-821-11	s	METAL, CHIP 1K 5% 1/16W
R413	1-216-821-11	s	METAL, CHIP 1K 5% 1/16W
R421	1-216-809-11	s	METAL, CHIP 100 5% 1/16W
R422	1-216-825-11	s	METAL, CHIP 2.2K 5% 1/16W
R423	1-216-833-11	s	METAL, CHIP 10K 5% 1/16W
R424	1-216-823-11	s	METAL, CHIP 1.5K 5% 1/16W
R425	1-216-817-11	s	METAL, CHIP 470 5% 1/16W
R426	1-216-821-11	s	METAL, CHIP 1K 5% 1/16W
R427	1-216-823-11	s	METAL, CHIP 1.5K 5% 1/16W
R429	1-216-827-11	s	METAL, CHIP 3.3K 5% 1/16W
R430	1-218-883-11	s	METAL, CHIP 33K 0.50 1/16W
R431	1-218-883-11	s	METAL, CHIP 33K 0.50 1/16W
R464	1-216-837-11	s	METAL, CHIP 22K 5% 1/16W
R465	1-216-837-11	s	METAL, CHIP 22K 5% 1/16W
R466	1-216-845-11	s	METAL, CHIP 100K 5% 1/16W
R467	1-216-833-11	s	METAL, CHIP 10K 5% 1/16W
R468	1-216-821-11	s	METAL, CHIP 1K 5% 1/16W
R469	1-216-821-11	s	METAL, CHIP 1K 5% 1/16W
R470	1-218-289-11	s	METAL, CHIP 510 5% 1/16W
R471	1-216-829-11	s	METAL, CHIP 4.7K 5% 1/16W
R472	1-216-829-11	s	METAL, CHIP 4.7K 5% 1/16W
R473	1-218-289-11	s	METAL, CHIP 510 5% 1/16W
R474	1-216-821-11	s	METAL, CHIP 1K 5% 1/16W
R475	1-216-821-11	s	METAL, CHIP 1K 5% 1/16W
R476	1-218-272-11	s	METAL, CHIP 5.1K 5% 1/16W

(DM-87 BOARD : S/N 10031-10340)

Ref. No. or Q'ty	Part No.	SP	Description
R477	1-216-825-11	s	METAL, CHIP 2.2K 5% 1/16W
R478	1-216-825-11	s	METAL, CHIP 2.2K 5% 1/16W
R479	1-216-809-11	s	METAL, CHIP 100 5% 1/16W
R480	1-216-825-11	s	METAL, CHIP 2.2K 5% 1/16W
R482	1-216-837-11	s	METAL, CHIP 22K 5% 1/16W
R483	1-216-809-11	s	METAL, CHIP 100 5% 1/16W
R484	1-216-833-11	s	METAL, CHIP 10K 5% 1/16W
R485	1-216-864-11	s	METAL, CHIP 0 5% 1/16W
R486	1-216-821-11	s	METAL, CHIP 1K 5% 1/16W
R487	1-216-837-11	s	METAL, CHIP 22K 5% 1/16W
R488	1-216-837-11	s	METAL, CHIP 22K 5% 1/16W
R489	1-216-822-11	s	METAL, CHIP 1.2K 5% 1/16W
R490	1-218-700-11	s	METAL, CHIP 2.2K 0.50% 1/16W
R493	1-216-822-11	s	METAL, CHIP 1.2K 5% 1/16W
R495	1-216-833-11	s	METAL, CHIP 10K 5% 1/16W
R496	1-216-825-11	s	METAL, CHIP 2.2K 5% 1/16W
R497	1-216-833-11	s	METAL, CHIP 10K 5% 1/16W
R498	1-218-740-11	s	METAL, CHIP 100K 0.50% 1/16W
R499	1-216-833-11	s	METAL, CHIP 10K 5% 1/16W
R500	1-216-833-11	s	METAL, CHIP 10K 5% 1/16W
R501	1-216-809-11	s	METAL, CHIP 100 5% 1/16W
R502	1-216-833-11	s	METAL, CHIP 10K 5% 1/16W
R503	1-216-805-11	s	METAL, CHIP 47 5% 1/16W
R504	1-216-809-11	s	METAL, CHIP 100 5% 1/16W
R505	1-216-825-11	s	METAL, CHIP 2.2K 5% 1/16W
R507	1-216-817-11	s	METAL, CHIP 470 5% 1/16W
R509	1-216-805-11	s	METAL, CHIP 47 5% 1/16W
R511	1-218-700-11	s	METAL, CHIP 2.2K 0.50% 1/16W
R512	1-218-706-11	s	METAL, CHIP 3.9K 0.50% 1/16W
R513	1-216-821-11	s	METAL, CHIP 1K 5% 1/16W
R514	1-216-809-11	s	METAL, CHIP 100 5% 1/16W
R515	1-218-714-11	s	METAL, CHIP 8.2K 0.50% 1/16W
R516	1-216-795-11	s	METAL, CHIP 6.8K 0.50% 1/16W
R517	1-218-295-11	s	METAL, CHIP 4.3K 5% 1/16W
R518	1-216-795-11	s	METAL, CHIP 6.8K 0.50% 1/16W
R519	1-216-805-11	s	METAL, CHIP 47 5% 1/16W
R522	1-216-821-11	s	METAL, CHIP 1K 5% 1/16W
R523	1-216-825-11	s	METAL, CHIP 2.2K 5% 1/16W
R524	1-216-825-11	s	METAL, CHIP 2.2K 5% 1/16W
R526	1-216-809-11	s	METAL, CHIP 100 5% 1/16W
R527	1-216-809-11	s	METAL, CHIP 100 5% 1/16W
R528	1-216-837-11	s	METAL, CHIP 22K 5% 1/16W
R529	1-216-837-11	s	METAL, CHIP 22K 5% 1/16W
R530	1-216-845-11	s	METAL, CHIP 100K 5% 1/16W
R531	1-216-833-11	s	METAL, CHIP 10K 5% 1/16W
R532	1-216-821-11	s	METAL, CHIP 1K 5% 1/16W
R533	1-216-821-11	s	METAL, CHIP 1K 5% 1/16W
R534	1-216-829-11	s	METAL, CHIP 4.7K 5% 1/16W
R535	1-218-289-11	s	METAL, CHIP 510 5% 1/16W
R536	1-216-829-11	s	METAL, CHIP 4.7K 5% 1/16W
R537	1-218-289-11	s	METAL, CHIP 510 5% 1/16W
R538	1-216-821-11	s	METAL, CHIP 1K 5% 1/16W
R539	1-216-821-11	s	METAL, CHIP 1K 5% 1/16W
R540	1-218-272-11	s	METAL, CHIP 5.1K 5% 1/16W
R541	1-216-825-11	s	METAL, CHIP 2.2K 5% 1/16W
R542	1-216-825-11	s	METAL, CHIP 2.2K 5% 1/16W
R543	1-216-809-11	s	METAL, CHIP 100 5% 1/16W
R544	1-216-825-11	s	METAL, CHIP 2.2K 5% 1/16W
R545	1-216-821-11	s	METAL, CHIP 1K 5% 1/16W

(DM-87 BOARD : S/N 10031-10340)

Ref. No. or Q'ty	Part No.	SP	Description
R546	1-216-823-11	s	METAL, CHIP 1.5K 5% 1/16W
R547	1-216-825-11	s	METAL, CHIP 2.2K 5% 1/16W
R548	1-216-809-11	s	METAL, CHIP 100 5% 1/16W
R549	1-216-833-11	s	METAL, CHIP 10K 5% 1/16W
R550	1-216-823-11	s	METAL, CHIP 1.5K 5% 1/16W
R551	1-216-813-11	s	METAL, CHIP 220 5% 1/16W
R552	1-216-821-11	s	METAL, CHIP 1K 5% 1/16W
R553	1-216-809-11	s	METAL, CHIP 100 5% 1/16W
R554	1-216-809-11	s	METAL, CHIP 100 5% 1/16W
R555	1-216-823-11	s	METAL, CHIP 1.5K 5% 1/16W
R556	1-216-821-11	s	METAL, CHIP 1K 5% 1/16W
R557	1-216-821-11	s	METAL, CHIP 1K 5% 1/16W
R558	1-216-809-11	s	METAL, CHIP 100 5% 1/16W
R559	1-216-833-11	s	METAL, CHIP 10K 5% 1/16W
R560	1-216-833-11	s	METAL, CHIP 10K 5% 1/16W
R561	1-216-833-11	s	METAL, CHIP 10K 5% 1/16W
R562	1-216-833-11	s	METAL, CHIP 10K 5% 1/16W
R565	1-216-833-11	s	METAL, CHIP 10K 5% 1/16W
R573	1-216-833-11	s	METAL, CHIP 10K 5% 1/16W
R575	1-216-864-11	s	METAL, CHIP 0 5% 1/16W
R586	1-216-801-11	s	METAL, CHIP 22 5% 1/16W
R587	1-216-833-11	s	METAL, CHIP 10K 5% 1/16W
R590	1-218-727-11	s	METAL, CHIP 30K 0.50% 1/16W
R591	1-216-838-11	s	METAL, CHIP 27K 5% 1/16W
R592	1-216-838-11	s	METAL, CHIP 27K 5% 1/16W
R593	1-216-837-11	s	METAL, CHIP 22K 5% 1/16W
R601	1-216-838-11	s	METAL, CHIP 27K 5% 1/16W
R605	1-218-271-11	s	METAL, CHIP 2K 5% 1/16W
R606	1-216-836-11	s	METAL, CHIP 18K 5% 1/16W
R701	1-218-688-11	s	METAL, CHIP 680 0.50% 1/16W
R707	1-216-821-11	s	METAL, CHIP 1K 5% 1/16W
R708	1-216-809-11	s	METAL, CHIP 100 5% 1/16W
R709	1-216-821-11	s	METAL, CHIP 1K 5% 1/16W
R710	1-216-838-11	s	METAL, CHIP 27K 5% 1/16W
R711	1-216-809-11	s	METAL, CHIP 100 5% 1/16W
R712	1-216-825-11	s	METAL, CHIP 2.2K 5% 1/16W
R713	1-216-817-11	s	METAL, CHIP 470 5% 1/16W
R714	1-218-883-11	s	METAL, CHIP 33K 0.50 1/16W
R715	1-216-817-11	s	METAL, CHIP 470 5% 1/16W
R716	1-218-482-11	s	METAL, CHIP 430 5% 1/16W
R718	1-216-825-11	s	METAL, CHIP 2.2K 5% 1/16W
R719	1-218-672-11	s	METAL, CHIP 150 0.50% 1/16W
R720	1-216-821-11	s	METAL, CHIP 1K 5% 1/16W
R721	1-216-837-11	s	METAL, CHIP 22K 5% 1/16W
R723	1-216-809-11	s	METAL, CHIP 100 5% 1/16W
R724	1-216-809-11	s	METAL, CHIP 100 5% 1/16W
R727	1-216-864-11	s	METAL, CHIP 0 5% 1/16W
R729	1-216-864-11	s	METAL, CHIP 0 5% 1/16W
R731	1-216-864-11	s	METAL, CHIP 0 5% 1/16W
R733	1-216-833-11	s	METAL, CHIP 10K 5% 1/16W
R736	1-216-864-11	s	METAL, CHIP 0 5% 1/16W
R737	1-216-841-11	s	METAL, CHIP 47K 5% 1/16W
R738	1-216-833-11	s	METAL, CHIP 10K 5% 1/16W
R740	1-218-708-11	s	METAL, CHIP 4.7K 0.50% 1/16W
R741	1-218-705-11	s	METAL, CHIP 3.6K 0.50% 1/16W
R742	1-216-832-11	s	METAL, CHIP 8.2K 5% 1/16W
R743	1-216-833-11	s	METAL, CHIP 10K 5% 1/16W
R744	1-216-833-11	s	METAL, CHIP 10K 5% 1/16W
R745	1-216-833-11	s	METAL, CHIP 10K 5% 1/16W

(DM-87 BOARD : S/N 10031-10340)

Ref. No. or Q'ty	Part No.	SP	Description
R746	1-216-815-11	s	METAL, CHIP 330 5% 1/16W
R747	1-216-809-11	s	METAL, CHIP 100 5% 1/16W
R748	1-216-821-11	s	METAL, CHIP 1K 5% 1/16W
R749	1-216-809-11	s	METAL, CHIP 100 5% 1/16W
R750	1-216-825-11	s	METAL, CHIP 2.2K 5% 1/16W
R751	1-216-817-11	s	METAL, CHIP 470 5% 1/16W
R752	1-218-724-11	s	METAL, CHIP 22K 0.50% 1/16W
R753	1-216-817-11	s	METAL, CHIP 470 5% 1/16W
R754	1-218-482-11	s	METAL, CHIP 430 5% 1/16W
R756	1-216-833-11	s	METAL, CHIP 10K 5% 1/16W
R757	1-216-821-11	s	METAL, CHIP 1K 5% 1/16W
R758	1-216-821-11	s	METAL, CHIP 1K 5% 1/16W
R759	1-216-821-11	s	METAL, CHIP 1K 5% 1/16W
R780	1-216-821-11	s	METAL, CHIP 1K 5% 1/16W
R785	1-216-845-11	s	METAL, CHIP 100K 5% 1/16W
R786	1-216-845-11	s	METAL, CHIP 100K 5% 1/16W
R787	1-215-440-00	s	METAL 6.2K 1% 1/6W
R787	1-216-809-11	s	METAL, CHIP 100 5% 1/16W
R788	1-218-288-11	s	METAL, CHIP 300 5% 1/16W
R789	1-216-839-11	s	METAL, CHIP 33K 5% 1/16W
R792	1-216-821-11	s	METAL, CHIP 1K 5% 1/16W
R792	1-216-833-11	s	METAL, CHIP 10K 5% 1/16W
R793	1-216-829-11	s	METAL, CHIP 4.7K 5% 1/16W
R794	1-216-821-11	s	METAL, CHIP 1K 5% 1/16W
R795	1-216-837-11	s	METAL, CHIP 22K 5% 1/16W
R796	1-218-720-11	s	METAL, CHIP 15K 0.50% 1/16W
R900	1-249-437-11	s	CARBON 47K 5% 1/4W
R901	1-247-903-00	s	CARBON 1M 5% 1/4W
R902	1-215-436-00	s	METAL 4.3K 1% 1/6W
R903	1-216-817-11	s	METAL, CHIP 470 5% 1/16W
R904	1-216-817-11	s	METAL, CHIP 470 5% 1/16W
R905	1-216-804-11	s	METAL, CHIP 39 5% 1/16W
R950	1-215-411-00	s	METAL 390 1% 1/6W
RV2	1-241-261-11	s	RES, ADJ, CERMET 1K
RV3	1-241-261-11	s	RES, ADJ, CERMET 1K
RV4	1-241-262-11	s	RES, ADJ, CERMET 2K
RV5	1-241-262-11	s	RES, ADJ, CERMET 2K
RV8	1-238-800-11	s	RES, ADJ METAL 2K
RV9	1-238-800-11	s	RES, ADJ METAL 2K
RV10	1-238-799-11	s	RES, ADJ METAL 1K
RV11	1-238-802-11	s	RES, ADJ METAL 10K
RV12	1-238-804-11	s	RES, ADJ METAL 50K
RV13	1-238-803-11	s	RES, ADJ METAL 20K
RV15	1-241-262-11	s	RES, ADJ, CERMET 2K
RV18	1-241-262-11	s	RES, ADJ, CERMET 2K
RV19	1-241-262-11	s	RES, ADJ, CERMET 2K
RV20	1-241-262-11	s	RES, ADJ, CERMET 2K
RV21	1-241-261-11	s	RES, ADJ, CERMET 1K
RV23	1-241-262-11	s	RES, ADJ, CERMET 2K
RV24	1-241-262-11	s	RES, ADJ, CERMET 2K
RV25	1-241-262-11	s	RES, ADJ, CERMET 2K
RV26	1-241-261-11	s	RES, ADJ, CERMET 1K
RV27	1-241-261-11	s	RES, ADJ, CERMET 1K
RV28	1-238-799-11	s	RES, ADJ METAL 1K
RV702	1-238-798-11	s	RES, ADJ METAL 500
TH100	1-808-269-11	s	THERMISTER
TH101	1-808-269-11	s	THERMISTER
TH102	1-800-202-XX	s	THERMISTOR S-10K

(DM-87 BOARD : S/N 10031-10340)

Ref. No. or Q'ty	Part No.	SP	Description
X501	1-577-080-11	s	CRYSTAL 3.579545Hz

DM-87 BOARD : S/N 10341 and higher

Ref. No. or Q'ty	Part No.	SP	Description
1pc	A-8271-226-A	o	MOUNTED CIRCUIT BOARD, DM-87
2pcs	2-251-622-11	s	LEVER, PC BOARD
C1	1-126-233-11	s	ELECT 22uF 20% 50V
C2	1-162-970-11	s	CERAMIC, CHIP 0.01uF 10% 25V
C3	1-162-970-11	s	CERAMIC, CHIP 0.01uF 10% 25V
C5	1-163-035-00	s	CERAMIC, CHIP 0.047uF 50V
C6	1-162-928-11	s	CERAMIC, CHIP 120PF 5% 50V
C7	1-164-392-11	s	CERAMIC, CHIP 390PF 5% 50V
C8	1-162-921-11	s	CERAMIC, CHIP 33PF 5% 50V
C9	1-163-145-00	s	CERAMIC, CHIP 0.0015uF 5% 50V
C10	1-162-958-11	s	CERAMIC, CHIP 270PF 5% 50V
C11	1-163-035-00	s	CERAMIC, CHIP 0.047uF 50V
C14	1-163-035-00	s	CERAMIC, CHIP 0.047uF 50V
C15	1-162-923-11	s	CERAMIC, CHIP 47PF 5% 50V
C16	1-162-922-11	s	CERAMIC, CHIP 39PF 5% 50V
C17	1-162-926-11	s	CERAMIC, CHIP 82PF 5% 50V
C18	1-162-923-11	s	CERAMIC, CHIP 47PF 5% 50V
C19	1-162-922-11	s	CERAMIC, CHIP 39PF 5% 50V
C20	1-162-970-11	s	CERAMIC, CHIP 0.01uF 10% 25V
C33	1-162-970-11	s	CERAMIC, CHIP 0.01uF 10% 25V
C34	1-124-907-11	s	ELECT 10uF 20% 50V
C35	1-162-970-11	s	CERAMIC, CHIP 0.01uF 10% 25V
C36	1-162-970-11	s	CERAMIC, CHIP 0.01uF 10% 25V
C37	1-135-166-21	s	TANTALUM, CHIP 47uF 10% 10V
C38	1-135-166-21	s	TANTALUM, CHIP 47uF 10% 10V
C39	1-163-038-00	s	CERAMIC, CHIP 0.1uF 25V
C40	1-162-970-11	s	CERAMIC, CHIP 0.01uF 10% 25V
C41	1-162-970-11	s	CERAMIC, CHIP 0.01uF 10% 25V
C42	1-163-145-00	s	CERAMIC, CHIP 0.0015uF 5% 50V
C43	1-163-038-00	s	CERAMIC, CHIP 0.1uF 25V
C44	1-162-924-11	s	CERAMIC 56PF 5% 50V
C45	1-162-928-11	s	CERAMIC, CHIP 120PF 5% 50V
C46	1-164-816-11	s	CERAMIC, CHIP 220PF 2% 50V
C47	1-162-959-11	s	CERAMIC, CHIP 330PF 5% 50V
C48	1-164-383-11	s	CERAMIC, CHIP 110PF 5% 50V
C49	1-164-392-11	s	CERAMIC, CHIP 390PF 5% 50V
C50	1-164-238-11	s	CERAMIC, CHIP 36PF 10% 50V
C51	1-164-466-11	s	CERAMIC, CHIP 240PF 5% 50V
C52	1-162-970-11	s	CERAMIC, CHIP 0.01uF 10% 25V
C54	1-162-920-11	s	CERAMIC, CHIP 27PF 5% 50V
C56	1-164-393-11	s	CERAMIC, CHIP 430PF 5% 50V
C59	1-162-970-11	s	CERAMIC, CHIP 0.01uF 10% 25V
C60	1-163-038-00	s	CERAMIC, CHIP 0.1uF 25V
C62	1-162-970-11	s	CERAMIC, CHIP 0.01uF 10% 25V
C63	1-162-923-11	s	CERAMIC, CHIP 47PF 5% 50V
C64	1-162-923-11	s	CERAMIC, CHIP 47PF 5% 50V
C65	1-162-970-11	s	CERAMIC, CHIP 0.01uF 10% 25V
C66	1-162-970-11	s	CERAMIC, CHIP 0.01uF 10% 25V
C67	1-162-923-11	s	CERAMIC, CHIP 47PF 5% 50V
C68	1-162-923-11	s	CERAMIC, CHIP 47PF 5% 50V
C69	1-162-970-11	s	CERAMIC, CHIP 0.01uF 10% 25V
C70	1-162-970-11	s	CERAMIC, CHIP 0.01uF 10% 25V
C72	1-135-166-21	s	TANTALUM, CHIP 47uF 10% 10V
C74	1-162-970-11	s	CERAMIC, CHIP 0.01uF 10% 25V
C75	1-162-915-11	s	CERAMIC, CHIP 10PF 50V
C76	1-162-970-11	s	CERAMIC, CHIP 0.01uF 10% 25V
C77	1-162-923-11	s	CERAMIC, CHIP 47PF 5% 50V
C78	1-163-035-00	s	CERAMIC, CHIP 0.047uF 50V

(DM-87 BOARD : S/N 10341 and higher)

Ref. No. or Q'ty	Part No.	SP	Description
C79	1-162-911-11	s	CERAMIC, CHIP 6PF 50V
C80	1-162-919-11	s	CERAMIC, CHIP 22PF 5% 50V
C81	1-162-925-11	s	CERAMIC, CHIP 68PF 5% 50V
C82	1-162-970-11	s	CERAMIC, CHIP 0.01uF 10% 25V
C83	1-124-477-11	s	ELECT 47uF 20% 25V
C84	1-162-912-11	s	CERAMIC 7PF 50V
C85	1-163-035-00	s	CERAMIC, CHIP 0.047uF 50V
C86	1-162-915-11	s	CERAMIC, CHIP 10PF 50V
C88	1-164-160-11	s	CERAMIC, CHIP 20PF 5% 50V
C89	1-163-035-00	s	CERAMIC, CHIP 0.047uF 50V
C90	1-163-035-00	s	CERAMIC, CHIP 0.047uF 50V
C91	1-162-970-11	s	CERAMIC, CHIP 0.01uF 10% 25V
C92	1-163-035-00	s	CERAMIC, CHIP 0.047uF 50V
C93	1-164-227-11	s	CERAMIC, CHIP 0.022uF 10% 25V
C94	1-162-916-11	s	CERAMIC, CHIP 12PF 5% 50V
C95	1-162-290-11	s	CERAMIC, CHIP 2PF 10% 25V
C96	1-162-970-11	s	CERAMIC, CHIP 0.01uF 10% 25V
C97	1-163-035-00	s	CERAMIC, CHIP 0.047uF 50V
C98	1-162-912-11	s	CERAMIC 7PF 50V
C99	1-162-918-11	s	CERAMIC, CHIP 18PF 5% 50V
C100	1-163-035-00	s	CERAMIC, CHIP 0.047uF 50V
C101	1-163-035-00	s	CERAMIC, CHIP 0.047uF 50V
C110	1-162-970-11	s	CERAMIC, CHIP 0.01uF 10% 25V
C111	1-162-970-11	s	CERAMIC, CHIP 0.01uF 10% 25V
C145	1-162-926-11	s	CERAMIC, CHIP 82PF 5% 50V
C146	1-124-126-00	s	ELECT 47uF 20% 25V
C148	1-162-913-11	s	CERAMIC 8PF 50V
C149	1-164-376-11	s	CERAMIC, CHIP 11PF 5% 50V
C150	1-162-921-11	s	CERAMIC, CHIP 33PF 5% 50V
C151	1-162-921-11	s	CERAMIC, CHIP 33PF 5% 50V
C152	1-124-126-00	s	ELECT 47uF 20% 25V
C153	1-124-126-00	s	ELECT 47uF 20% 25V
C154	1-124-126-00	s	ELECT 47uF 20% 25V
C155	1-128-057-11	s	ELECT 330uF 20% 6.3V
C156	1-128-057-11	s	ELECT 330uF 20% 6.3V
C157	1-162-970-11	s	CERAMIC, CHIP 0.01uF 10% 25V
C158	1-162-970-11	s	CERAMIC, CHIP 0.01uF 10% 25V
C159	1-124-126-00	s	ELECT 47uF 20% 25V
C160	1-124-126-00	s	ELECT 47uF 20% 25V
C161	1-162-970-11	s	CERAMIC, CHIP 0.01uF 10% 25V
C162	1-162-970-11	s	CERAMIC, CHIP 0.01uF 10% 25V
C166	1-162-913-11	s	CERAMIC 8PF 50V
C167	1-162-917-11	s	CERAMIC, CHIP 15PF 5% 50V
C168	1-162-921-11	s	CERAMIC, CHIP 33PF 5% 50V
C169	1-162-925-11	s	CERAMIC, CHIP 68PF 5% 50V
C170	1-164-376-11	s	CERAMIC, CHIP 11PF 5% 50V
C171	1-164-185-11	s	CERAMIC, CHIP 13PF 5% 50V
C172	1-162-921-11	s	CERAMIC, CHIP 33PF 5% 50V
C173	1-162-925-11	s	CERAMIC, CHIP 68PF 5% 50V
C174	1-124-126-00	s	ELECT 47uF 20% 25V
C175	1-124-126-00	s	ELECT 47uF 20% 25V
C176	1-162-970-11	s	CERAMIC, CHIP 0.01uF 10% 25V
C177	1-162-970-11	s	CERAMIC, CHIP 0.01uF 10% 25V
C178	1-128-057-11	s	ELECT 330uF 20% 6.3V
C179	1-128-057-11	s	ELECT 330uF 20% 6.3V
C199	1-124-126-00	s	ELECT 47uF 20% 25V
C200	1-124-907-11	s	ELECT 10uF 20% 50V
C201	1-162-970-11	s	CERAMIC, CHIP 0.01uF 10% 25V
C202	1-162-970-11	s	CERAMIC, CHIP 0.01uF 10% 25V

(DM-87 BOARD : S/N 10341 and higher)

Ref. No. or Q'ty	Part No.	SP	Description
C203	1-124-443-00	s	ELECT 100uF 20% 10V
C204	1-124-443-00	s	ELECT 100uF 20% 10V
C228	1-162-970-11	s	CERAMIC, CHIP 0.01uF 10% 25V
C229	1-124-477-11	s	ELECT 47uF 20% 25V
C230	1-164-346-11	s	CERAMIC 1uF 16V
C231	1-124-126-00	s	ELECT 47uF 20% 25V
C232	1-162-970-11	s	CERAMIC, CHIP 0.01uF 10% 25V
C233	1-162-970-11	s	CERAMIC, CHIP 0.01uF 10% 25V
C234	1-124-126-00	s	ELECT 47uF 20% 25V
C235	1-163-038-00	s	CERAMIC, CHIP 0.1uF 25V
C236	1-124-126-00	s	ELECT 47uF 20% 25V
C237	1-162-970-11	s	CERAMIC, CHIP 0.01uF 10% 25V
C238	1-162-970-11	s	CERAMIC, CHIP 0.01uF 10% 25V
C239	1-124-907-11	s	ELECT 10uF 20% 50V
C240	1-162-923-11	s	CERAMIC, CHIP 47PF 5% 50V
C241	1-162-927-11	s	CERAMIC, CHIP 100PF 5% 50V
C242	1-124-907-11	s	ELECT 10uF 20% 50V
C243	1-164-346-11	s	CERAMIC 1uF 16V
C244	1-162-970-11	s	CERAMIC, CHIP 0.01uF 10% 25V
C245	1-124-126-00	s	ELECT 47uF 20% 25V
C246	1-124-126-00	s	ELECT 47uF 20% 25V
C247	1-162-970-11	s	CERAMIC, CHIP 0.01uF 10% 25V
C248	1-163-038-00	s	CERAMIC, CHIP 0.1uF 25V
C249	1-124-126-00	s	ELECT 47uF 20% 25V
C250	1-162-970-11	s	CERAMIC, CHIP 0.01uF 10% 25V
C251	1-162-970-11	s	CERAMIC, CHIP 0.01uF 10% 25V
C252	1-124-907-11	s	ELECT 10uF 20% 50V
C253	1-162-921-11	s	CERAMIC, CHIP 33PF 5% 50V
C254	1-124-907-11	s	ELECT 10uF 20% 50V
C255	1-162-970-11	s	CERAMIC, CHIP 0.01uF 10% 25V
C256	1-124-477-11	s	ELECT 47uF 20% 25V
C257	1-163-037-11	s	CERAMIC, CHIP 0.022uF 25V
C258	1-164-005-11	s	CERAMIC, CHIP 0.47uF 25V
C259	1-163-034-00	s	CERAMIC, CHIP 0.033uF 50V
C260	1-124-907-11	s	ELECT 10uF 20% 50V
C261	1-163-137-00	s	CERAMIC, CHIP 680PF 5% 50V
C262	1-163-035-00	s	CERAMIC, CHIP 0.047uF 50V
C263	1-162-970-11	s	CERAMIC, CHIP 0.01uF 10% 25V
C264	1-124-443-00	s	ELECT 100uF 20% 10V
C265	1-162-970-11	s	CERAMIC, CHIP 0.01uF 10% 25V
C266	1-124-443-00	s	ELECT 100uF 20% 10V
C267	1-124-443-00	s	ELECT 100uF 20% 10V
C268	1-162-970-11	s	CERAMIC, CHIP 0.01uF 10% 25V
C269	1-162-970-11	s	CERAMIC, CHIP 0.01uF 10% 25V
C270	1-135-159-21	s	TANTALUM, CHIP 10uF 10% 20V
C271	1-164-491-11	s	CERAMIC 300PF 5% 50V
C273	1-162-959-11	s	CERAMIC, CHIP 330PF 5% 50V
C274	1-164-392-11	s	CERAMIC, CHIP 390PF 5% 50V
C275	1-162-921-11	s	CERAMIC, CHIP 33PF 5% 50V
C276	1-135-180-21	s	TANTALUM 33uF 10% 10V
C277	1-135-180-21	s	TANTALUM 33uF 10% 10V
C278	1-135-159-21	s	TANTALUM, CHIP 10uF 10% 20V
C279	1-124-907-11	s	ELECT 10uF 20% 50V
C280	1-164-005-11	s	CERAMIC, CHIP 0.47uF 25V
C281	1-162-970-11	s	CERAMIC, CHIP 0.01uF 10% 25V
C282	1-162-970-11	s	CERAMIC, CHIP 0.01uF 10% 25V
C283	1-124-443-00	s	ELECT 100uF 20% 10V
C284	1-124-907-11	s	ELECT 10uF 20% 50V
C285	1-162-970-11	s	CERAMIC, CHIP 0.01uF 10% 25V

(DM-87 BOARD : S/N 10341 and higher)

Ref. No. or Q'ty	Part No.	SP	Description
C286	1-126-233-11	s	ELECT 22uF 20% 50V
C287	1-126-233-11	s	ELECT 22uF 20% 50V
C288	1-128-057-11	s	ELECT 330uF 20% 6.3V
C289	1-128-057-11	s	ELECT 330uF 20% 6.3V
C290	1-162-970-11	s	CERAMIC, CHIP 0.01uF 10% 25V
C291	1-162-970-11	s	CERAMIC, CHIP 0.01uF 10% 25V
C293	1-162-917-11	s	CERAMIC, CHIP 15PF 5% 50V
C294	1-135-166-21	s	TANTALUM, CHIP 47uF 10% 10V
C296	1-135-166-21	s	TANTALUM, CHIP 47uF 10% 10V
C297	1-162-921-11	s	CERAMIC, CHIP 33PF 5% 50V
C298	1-135-227-11	s	TANTAL 100uF 20% 6.3V
C299	1-135-227-11	s	TANTAL 100uF 20% 6.3V
C300	1-162-916-11	s	CERAMIC, CHIP 12PF 5% 50V
C303	1-135-165-11	s	TANTALUM 33uF 20% 16V
C304	1-135-165-11	s	TANTALUM 33uF 20% 16V
C305	1-162-970-11	s	CERAMIC, CHIP 0.01uF 10% 25V
C306	1-162-970-11	s	CERAMIC, CHIP 0.01uF 10% 25V
C307	1-135-166-21	s	TANTALUM, CHIP 47uF 10% 10V
C308	1-135-166-21	s	TANTALUM, CHIP 47uF 10% 10V
C309	1-162-970-11	s	CERAMIC, CHIP 0.01uF 10% 25V
C310	1-162-970-11	s	CERAMIC, CHIP 0.01uF 10% 25V
C311	1-164-378-11	s	CERAMIC, CHIP 30PF 5% 50V
C312	1-124-126-00	s	ELECT 47uF 20% 25V
C314	1-135-166-21	s	TANTALUM, CHIP 47uF 10% 10V
C316	1-162-924-11	s	CERAMIC 56PF 5% 50V
C321	1-162-970-11	s	CERAMIC, CHIP 0.01uF 10% 25V
C322	1-162-970-11	s	CERAMIC, CHIP 0.01uF 10% 25V
C323	1-135-166-21	s	TANTALUM, CHIP 47uF 10% 10V
C324	1-135-166-21	s	TANTALUM, CHIP 47uF 10% 10V
C325	1-124-126-00	s	ELECT 47uF 20% 25V
C326	1-162-970-11	s	CERAMIC, CHIP 0.01uF 10% 25V
C327	1-162-970-11	s	CERAMIC, CHIP 0.01uF 10% 25V
C328	1-124-126-00	s	ELECT 47uF 20% 25V
C329	1-124-126-00	s	ELECT 47uF 20% 25V
C330	1-162-970-11	s	CERAMIC, CHIP 0.01uF 10% 25V
C331	1-163-215-00	s	CERAMIC, CHIP 0.0027uF 5% 50V
C333	1-124-907-11	s	ELECT 10uF 20% 50V
C334	1-162-970-11	s	CERAMIC, CHIP 0.01uF 10% 25V
C365	1-162-970-11	s	CERAMIC, CHIP 0.01uF 10% 25V
C366	1-135-165-11	s	TANTALUM 33uF 20% 16V
C367	1-135-165-11	s	TANTALUM 33uF 20% 16V
C368	1-135-166-21	s	TANTALUM, CHIP 47uF 10% 10V
C369	1-164-346-11	s	CERAMIC 1uF 16V
C370	1-135-227-11	s	TANTAL 100uF 20% 6.3V
C371	1-135-227-11	s	TANTAL 100uF 20% 6.3V
C372	1-163-038-00	s	CERAMIC, CHIP 0.1uF 25V
C373	1-135-166-21	s	TANTALUM, CHIP 47uF 10% 10V
C374	1-162-970-11	s	CERAMIC, CHIP 0.01uF 10% 25V
C375	1-162-970-11	s	CERAMIC, CHIP 0.01uF 10% 25V
C376	1-135-165-11	s	TANTALUM 33uF 20% 16V
C378	1-162-970-11	s	CERAMIC, CHIP 0.01uF 10% 25V
C379	1-164-217-11	s	CERAMIC, CHIP 150PF 5% 50V
C380	1-162-970-11	s	CERAMIC, CHIP 0.01uF 10% 25V
C381	1-162-970-11	s	CERAMIC, CHIP 0.01uF 10% 25V
C382	1-162-970-11	s	CERAMIC, CHIP 0.01uF 10% 25V
C383	1-162-970-11	s	CERAMIC, CHIP 0.01uF 10% 25V
C385	1-162-919-11	s	CERAMIC, CHIP 22PF 5% 50V
C386	1-124-477-11	s	ELECT 47uF 20% 25V
C387	1-162-970-11	s	CERAMIC, CHIP 0.01uF 10% 25V

(DM-87 BOARD : S/N 10341 and higher)

Ref. No. or Q'ty	Part No.	SP	Description
C388	1-162-923-11	s	CERAMIC, CHIP 47PF 5% 50V
C389	1-124-907-11	s	ELECT 10uF 20% 50V
C390	1-162-970-11	s	CERAMIC, CHIP 0.01uF 10% 25V
C391	1-162-970-11	s	CERAMIC, CHIP 0.01uF 10% 25V
C392	1-124-477-11	s	ELECT 47uF 20% 25V
C394	1-162-912-11	s	CERAMIC 7PF 50V
C395	1-163-038-00	s	CERAMIC, CHIP 0.1uF 25V
C396	1-162-924-11	s	CERAMIC 56PF 5% 50V
C398	1-162-970-11	s	CERAMIC, CHIP 0.01uF 10% 25V
C400	1-124-903-11	s	ELECT 1uF 20% 50V
C401	1-162-970-11	s	CERAMIC, CHIP 0.01uF 10% 25V
C402	1-124-477-11	s	ELECT 47uF 20% 25V
C403	1-162-970-11	s	CERAMIC, CHIP 0.01uF 10% 25V
C404	1-164-227-11	s	CERAMIC, CHIP 0.022uF 10% 25V
C405	1-162-959-11	s	CERAMIC, CHIP 330PF 5% 50V
C406	1-162-970-11	s	CERAMIC, CHIP 0.01uF 10% 25V
C407	1-135-176-21	s	TANTALUM, CHIP 0.68uF 20% 35V
C408	1-135-091-00	s	TANTALUN, CHIP 1uF 10% 16V
C409	1-162-970-11	s	CERAMIC, CHIP 0.01uF 10% 25V
C410	1-162-970-11	s	CERAMIC, CHIP 0.01uF 10% 25V
C412	1-124-126-00	s	ELECT 47uF 20% 25V
C413	1-124-126-00	s	ELECT 47uF 20% 25V
C414	1-162-970-11	s	CERAMIC, CHIP 0.01uF 10% 25V
C415	1-162-970-11	s	CERAMIC, CHIP 0.01uF 10% 25V
C416	1-124-126-00	s	ELECT 47uF 20% 25V
C417	1-162-970-11	s	CERAMIC, CHIP 0.01uF 10% 25V
C418	1-162-970-11	s	CERAMIC, CHIP 0.01uF 10% 25V
C419	1-124-126-00	s	ELECT 47uF 20% 25V
C420	1-162-970-11	s	CERAMIC, CHIP 0.01uF 10% 25V
C421	1-162-970-11	s	CERAMIC, CHIP 0.01uF 10% 25V
C422	1-162-970-11	s	CERAMIC, CHIP 0.01uF 10% 25V
C423	1-135-165-11	s	TANTALUM 33uF 20% 16V
C424	1-135-165-11	s	TANTALUM 33uF 20% 16V
C425	1-135-166-21	s	TANTALUM, CHIP 47uF 10% 10V
C427	1-135-227-11	s	TANTAL 100uF 20% 6.3V
C428	1-135-227-11	s	TANTAL 100uF 20% 6.3V
C429	1-163-038-00	s	CERAMIC, CHIP 0.1uF 25V
C430	1-135-166-21	s	TANTALUM, CHIP 47uF 10% 10V
C431	1-163-035-00	s	CERAMIC, CHIP 0.047uF 50V
C432	1-162-970-11	s	CERAMIC, CHIP 0.01uF 10% 25V
C433	1-135-165-11	s	TANTALUM 33uF 20% 16V
C434	1-163-038-00	s	CERAMIC, CHIP 0.1uF 25V
C435	1-164-346-11	s	CERAMIC 1uF 16V
C436	1-163-035-00	s	CERAMIC, CHIP 0.047uF 50V
C437	1-124-126-00	s	ELECT 47uF 20% 25V
C438	1-124-126-00	s	ELECT 47uF 20% 25V
C439	1-162-970-11	s	CERAMIC, CHIP 0.01uF 10% 25V
C440	1-162-970-11	s	CERAMIC, CHIP 0.01uF 10% 25V
C441	1-163-035-00	s	CERAMIC, CHIP 0.047uF 50V
C442	1-162-923-11	s	CERAMIC, CHIP 47PF 5% 50V
C452	1-163-035-00	s	CERAMIC, CHIP 0.047uF 50V
C453	1-164-385-11	s	CERAMIC, CHIP 160PF 5% 50V
C454	1-135-166-21	s	TANTALUM, CHIP 47uF 10% 10V
C455	1-164-363-11	s	CERAMIC, CHIP 560PF 5% 50V
C456	1-135-166-21	s	TANTALUM, CHIP 47uF 10% 10V
C457	1-162-970-11	s	CERAMIC, CHIP 0.01uF 10% 25V
C701	1-135-227-11	s	TANTAL 100uF 20% 6.3V
C702	1-135-227-11	s	TANTAL 100uF 20% 6.3V
C703	1-162-912-11	s	CERAMIC 7PF 50V

(DM-87 BOARD : S/N 10341 and higher)

Ref. No. or Q'ty	Part No.	SP	Description
C704	1-164-378-11	s	CERAMIC, CHIP 30PF 5% 50V
C705	1-162-970-11	s	CERAMIC, CHIP 0.01uF 10% 25V
C706	1-162-970-11	s	CERAMIC, CHIP 0.01uF 10% 25V
C707	1-162-923-11	s	CERAMIC, CHIP 47PF 5% 50V
C708	1-124-126-00	s	ELECT 47uF 20% 25V
C709	1-162-970-11	s	CERAMIC, CHIP 0.01uF 10% 25V
C710	1-124-477-11	s	ELECT 47uF 20% 25V
C711	1-162-923-11	s	CERAMIC, CHIP 47PF 5% 50V
C712	1-128-057-11	s	ELECT 330uF 20% 6.3V
C713	1-128-057-11	s	ELECT 330uF 20% 6.3V
C714	1-128-057-11	s	ELECT 330uF 20% 6.3V
C715	1-128-057-11	s	ELECT 330uF 20% 6.3V
C717	1-162-921-11	s	CERAMIC, CHIP 33PF 5% 50V
C718	1-162-923-11	s	CERAMIC, CHIP 47PF 5% 50V
C719	1-163-275-11	s	CERAMIC, CHIP 0.001uF 5% 50V
C720	1-162-970-11	s	CERAMIC, CHIP 0.01uF 10% 25V
C721	1-126-233-11	s	ELECT 22uF 20% 50V
C722	1-162-970-11	s	CERAMIC, CHIP 0.01uF 10% 25V
C723	1-126-233-11	s	ELECT 22uF 20% 50V
C724	1-135-227-11	s	TANTAL 100uF 20% 6.3V
C724	1-162-968-11	s	CERAMIC, CHIP 0.0047uF 10% 50V
C725	1-135-227-11	s	TANTAL 100uF 20% 6.3V
C725	1-162-970-11	s	CERAMIC, CHIP 0.01uF 10% 25V
C726	1-164-185-11	s	CERAMIC, CHIP 13PF 5% 50V
C727	1-162-919-11	s	CERAMIC, CHIP 22PF 5% 50V
C728	1-131-134-11	s	TANTAL, ELECT 0.1MF 10% 35V
C729	1-163-035-00	s	CERAMIC, CHIP 0.047uF 50V
C730	1-162-918-11	s	CERAMIC, CHIP 18PF 5% 50V
C731	1-163-038-00	s	CERAMIC, CHIP 0.1uF 5% 50V
C733	1-162-291-11	s	CERAMIC, CHIP 33PF 5% 50V
C735	1-164-315-11	s	CERAMIC, CHIP 470PF 5% 50V
C736	1-164-227-11	s	CERAMIC, CHIP 0.022uF 5% 25V
CN1	1-564-317-11	o	CONNECTOR, BB 5P, MALE
CN2	1-564-317-11	o	CONNECTOR, BB 5P, MALE
CN7	1-566-095-11	o	CONNECTOR, BB 11P, MALE
CN8	1-566-095-11	o	CONNECTOR, BB 11P, MALE
CN9	1-566-095-11	o	CONNECTOR, BB 11P, MALE
CN10	1-566-095-11	o	CONNECTOR, BB 11P, MALE
CN11	1-566-096-11	s	CONNECTOR, BB 12P, MALE
CN12	1-566-096-11	s	CONNECTOR, BB 12P, MALE
CN607	1-573-782-21	o	CONNECTOR, PHEC 60P, MALE
CN608	1-573-782-21	o	CONNECTOR, PHEC 60P, MALE
CT1	1-141-404-11	s	CAP, TRIMMER 30PF
CT2	1-141-404-11	s	CAP, TRIMMER 30PF
CT3	1-141-345-11	s	CAP, TRIMMER 40PF
D1	8-719-941-86	s	DIODE DAN202U
D2	8-719-941-86	s	DIODE DAN202U
D5	8-719-941-86	s	DIODE DAN202U
D6	8-719-800-76	s	DIODE 1SS226
D7	8-719-941-86	s	DIODE DAN202U
D8	8-719-941-86	s	DIODE DAN202U
D12	8-719-941-86	s	DIODE DAN202U
D701	8-719-941-86	s	DIODE DAN202U
D702	8-719-941-09	s	DIODE DAP202U
D704	8-719-941-86	s	DIODE DAN202U
D705	8-719-941-86	s	DIODE DAN202U
D706	8-719-941-86	s	DIODE DAN202U
D707	8-719-941-86	s	DIODE DAN202U

(DM-87 BOARD : S/N 10341 and higher)

Ref. No. or Q'ty	Part No.	SP	Description
D900	8-719-911-19	s	DIODE 1SS119
DL1	1-415-403-21	s	DELAY LINE 1uS
FL2	1-236-757-21	s	FILTER, LOW-PASS (C)
FL3	1-236-773-21	s	FILTER, LOW-PASS (Y)
FL4	1-236-716-11	s	FILTER, LOW-PASS
FL5	1-236-774-11	s	FILTER, LOW-PASS (Y)
FL7	1-236-575-11	s	FIRTER, BAND PASS (PAL-M)
FL8	1-567-306-11	s	RESONATOR, CERAMIC
FL9	1-236-146-11	s	FILTER, BAND PASS 3.68MHz
IC3	8-759-998-32	s	IC CXD2107M
IC4	8-759-710-86	s	IC NJM2233BM-T1
IC5	8-759-925-60	s	IC BA401
IC6	8-759-710-86	s	IC NJM2233BM-T1
IC9	8-759-710-86	s	IC NJM2233BM-T1
IC10	8-759-710-86	s	IC NJM2233BM-T1
IC12	8-752-015-81	s	IC CX20158
IC15	8-752-332-68	s	IC CXL5502M
IC16	8-752-332-68	s	IC CXL5502M
IC17	8-752-054-62	s	IC CXA1207AR
IC18	8-759-710-86	s	IC NJM2233BM-T1
IC19	8-759-239-34	s	IC TC74HC4538AF
IC23	8-759-030-55	s	IC MC1496M
IC24	8-759-710-86	s	IC NJM2233BM-T1
IC25	8-752-051-40	s	IC CXA1208R
IC26	8-759-925-74	s	IC TC74HC04NS
IC27	8-759-708-05	s	IC NJM78L05A
IC28	8-759-700-65	s	IC NJM79L05A
IC29	8-759-030-55	s	IC MC1496M
IC31	8-759-925-74	s	IC TC74HC04NS
IC701	8-759-710-86	s	IC NJM2233BM-T1
IC702	8-759-925-90	s	IC SN74HC74NS
IC703	8-759-239-55	s	IC TC74HC123AF
L1	1-408-785-21	s	INDUCTOR, CHIP 47UH
L2	1-410-385-11	s	INDUCTOR, CHIP 22UH
L3	1-412-280-31	s	INDUCTOR, CHIP 330UH
L4	1-410-167-41	s	INDUCTOR, CHIP 820UH
L5	1-410-657-21	s	INDUCTOR, CHIP 180UH
L7	1-410-374-11	s	INDUCTOR, CHIP 2.7UH
L8	1-410-379-31	s	INDUCTOR, CHIP 6.8UH
L9	1-410-379-31	s	INDUCTOR, CHIP 6.8UH
L10	1-410-379-31	s	INDUCTOR, CHIP 6.8UH
L12	1-408-785-21	s	INDUCTOR, CHIP 47UH
L13	1-408-785-21	s	INDUCTOR, CHIP 47UH
L14	1-408-785-21	s	INDUCTOR, CHIP 47UH
L15	1-408-798-00	s	INDUCTOR, CHIP 1mmH
L16	1-410-389-31	s	INDUCTOR, CHIP 47UH
L17	1-410-391-11	s	INDUCTOR, CHIP 68UH
L18	1-410-392-11	s	INDUCTOR, CHIP 82UH
L19	1-410-392-11	s	INDUCTOR, CHIP 82UH
L23	1-408-785-21	s	INDUCTOR, CHIP 47UH
L25	1-410-381-11	s	INDUCTOR, CHIP 10UH
L26	1-410-383-31	s	INDUCTOR, CHIP 15UH
L27	1-408-785-21	s	INDUCTOR, CHIP 47UH
L28	1-410-384-31	s	INDUCTOR, CHIP 18UH
L29	1-412-282-41	s	INDUCTOR, CHIP 470UH
L30	1-412-282-41	s	INDUCTOR, CHIP 470UH
L31	1-410-384-31	s	INDUCTOR, CHIP 18UH

(DM-87 BOARD : S/N 10341 and higher)

Ref. No. or Q'ty	Part No.	SP	Description
L42	1-410-385-11	s	INDUCTOR, CHIP 22UH
L43	1-410-381-11	s	INDUCTOR, CHIP 10UH
L44	1-408-785-21	s	INDUCTOR, CHIP 47UH
L45	1-408-785-21	s	INDUCTOR, CHIP 47UH
L46	1-410-381-11	s	INDUCTOR, CHIP 10UH
L47	1-410-384-31	s	INDUCTOR, CHIP 18UH
L48	1-408-785-21	s	INDUCTOR, CHIP 47UH
L49	1-408-785-21	s	INDUCTOR, CHIP 47UH
L52	1-410-381-11	s	INDUCTOR, CHIP 10UH
L53	1-410-381-11	s	INDUCTOR, CHIP 10UH
L56	1-408-785-21	s	INDUCTOR, CHIP 47UH
L57	1-408-785-21	s	INDUCTOR, CHIP 47UH
L61	1-408-785-21	s	INDUCTOR, CHIP 47UH
L62	1-408-777-00	s	INDUCTOR, CHIP 10UH
L63	1-408-777-00	s	INDUCTOR, CHIP 10UH
L64	1-408-777-00	s	INDUCTOR, CHIP 10UH
L65	1-408-777-00	s	INDUCTOR, CHIP 10UH
L66	1-408-785-21	s	INDUCTOR, CHIP 47UH
L67	1-408-785-21	s	INDUCTOR, CHIP 47UH
L68	1-410-379-31	s	INDUCTOR, CHIP 6.8UH
L69	1-408-785-21	s	INDUCTOR, CHIP 47UH
L70	1-408-785-21	s	INDUCTOR, CHIP 47UH
L72	1-410-387-11	s	INDUCTOR, CHIP 33UH
L73	1-410-383-31	s	INDUCTOR, CHIP 15UH
L80	1-408-785-21	s	INDUCTOR, CHIP 47UH
L81	1-408-785-21	s	INDUCTOR, CHIP 47UH
L82	1-408-785-21	s	INDUCTOR, CHIP 47UH
L87	1-408-785-21	s	INDUCTOR, CHIP 47UH
L88	1-408-785-21	s	INDUCTOR, CHIP 47UH
L89	1-408-785-21	s	INDUCTOR, CHIP 47UH
L90	1-410-392-11	s	INDUCTOR, CHIP 82UH
L91	1-410-385-11	s	INDUCTOR, CHIP 22UH
L92	1-410-385-11	s	INDUCTOR, CHIP 22UH
L93	1-408-785-21	s	INDUCTOR, CHIP 47UH
L94	1-408-785-21	s	INDUCTOR, CHIP 47UH
L95	1-408-785-21	s	INDUCTOR, CHIP 47UH
L96	1-410-389-31	s	INDUCTOR, CHIP 47UH
L97	1-410-389-31	s	INDUCTOR, CHIP 47UH
L98	1-408-785-21	s	INDUCTOR, CHIP 47UH
L99	1-408-785-21	s	INDUCTOR, CHIP 47UH
L701	1-410-386-11	s	INDUCTOR, CHIP 27UH
L702	1-408-785-21	s	INDUCTOR, CHIP 47UH
L703	1-408-785-21	s	INDUCTOR, CHIP 47UH
L704	1-408-785-21	s	INDUCTOR, CHIP 47UH
L705	1-408-785-21	s	INDUCTOR, CHIP 47UH
L706	1-408-785-21	s	INDUCTOR, CHIP 47UH
L707	1-408-785-21	s	INDUCTOR, CHIP 47UH
L708	1-408-785-21	s	INDUCTOR, CHIP 47UH
L709	1-410-385-11	s	INDUCTOR, CHIP 22UH
L709	1-410-655-31	s	INDUCTOR, CHIP 120UH
Q1	8-729-102-07	s	TRANSISTOR 2SC2223-F13
Q3	8-729-102-07	s	TRANSISTOR 2SC2223-F13
Q4	8-729-102-07	s	TRANSISTOR 2SC2223-F13
Q5	8-729-102-07	s	TRANSISTOR 2SC2223-F13
Q6	8-729-905-18	s	TRANSISTOR DTC144EU
Q7	8-729-102-07	s	TRANSISTOR 2SC2223-F13
Q8	8-729-905-18	s	TRANSISTOR DTC144EU
Q9	8-729-905-12	s	TRANSISTOR DTA144EU
Q10	8-729-102-07	s	TRANSISTOR 2SC2223-F13

(DM-87 BOARD : S/N 10341 and higher)

Ref. No. or Q'ty	Part No.	SP	Description
Q11	8-729-905-18	s	TRANSISTOR DTC144EU
Q13	8-729-120-28	s	TRANSISTOR 2SC1623-L5L6
Q14	8-729-905-12	s	TRANSISTOR DTA144EU
Q15	8-729-905-18	s	TRANSISTOR DTC144EU
Q16	8-729-905-12	s	TRANSISTOR DTA144EU
Q17	8-729-905-18	s	TRANSISTOR DTC144EU
Q18	8-729-905-12	s	TRANSISTOR DTA144EU
Q19	8-729-905-18	s	TRANSISTOR DTC144EU
Q20	8-729-905-12	s	TRANSISTOR DTA144EU
Q21	8-729-905-18	s	TRANSISTOR DTC144EU
Q22	8-729-905-12	s	TRANSISTOR DTA144EU
Q23	8-729-905-18	s	TRANSISTOR DTC144EU
Q24	8-729-905-12	s	TRANSISTOR DTA144EU
Q25	8-729-905-18	s	TRANSISTOR DTC144EU
Q26	8-729-120-28	s	TRANSISTOR 2SC1623-L5L6
Q27	8-729-120-28	s	TRANSISTOR 2SC1623-L5L6
Q28	8-729-905-18	s	TRANSISTOR DTC144EU
Q29	8-729-120-28	s	TRANSISTOR 2SC1623-L5L6
Q30	8-729-120-28	s	TRANSISTOR 2SC1623-L5L6
Q31	8-729-120-28	s	TRANSISTOR 2SC1623-L5L6
Q33	8-729-905-23	s	TRANSISTOR 2SA1576-R
Q34	8-729-202-38	s	TRANSISTOR 2SC3326N
Q35	8-729-202-38	s	TRANSISTOR 2SC3326N
Q36	8-729-120-28	s	TRANSISTOR 2SC1623-L5L6
Q37	8-729-120-28	s	TRANSISTOR 2SC1623-L5L6
Q38	8-729-120-28	s	TRANSISTOR 2SC1623-L5L6
Q39	8-729-120-28	s	TRANSISTOR 2SC1623-L5L6
Q40	8-729-120-28	s	TRANSISTOR 2SC1623-L5L6
Q41	8-729-120-28	s	TRANSISTOR 2SC1623-L5L6
Q42	8-729-120-28	s	TRANSISTOR 2SC1623-L5L6
Q43	8-729-905-18	s	TRANSISTOR DTC144EU
Q44	8-729-905-18	s	TRANSISTOR DTC144EU
Q46	8-729-202-38	s	TRANSISTOR 2SC3326N
Q48	8-729-120-28	s	TRANSISTOR 2SC1623-L5L6
Q49	8-729-120-28	s	TRANSISTOR 2SC1623-L5L6
Q50	8-729-905-12	s	TRANSISTOR DTA144EU
Q51	8-729-120-28	s	TRANSISTOR 2SC1623-L5L6
Q52	8-729-905-18	s	TRANSISTOR DTC144EU
Q53	8-729-120-28	s	TRANSISTOR 2SC1623-L5L6
Q54	8-729-903-10	s	TRANSISTOR FMW1
Q55	8-729-903-97	s	TRANSISTOR FMS1FE
Q56	8-729-120-28	s	TRANSISTOR 2SC1623-L5L6
Q57	8-729-120-28	s	TRANSISTOR 2SC1623-L5L6
Q58	8-729-903-10	s	TRANSISTOR FMW1
Q70	8-729-202-38	s	TRANSISTOR 2SC3326N
Q71	8-729-230-49	s	TRANSISTOR 2SC2712-YG
Q72	8-729-102-07	s	TRANSISTOR 2SC2223-F13
Q73	8-729-102-07	s	TRANSISTOR 2SC2223-F13
Q74	8-729-102-07	s	TRANSISTOR 2SC2223-F13
Q75	8-729-102-07	s	TRANSISTOR 2SC2223-F13
Q76	8-729-120-28	s	TRANSISTOR 2SC1623-L5L6
Q77	8-729-230-49	s	TRANSISTOR 2SC2712-YG
Q78	8-729-102-07	s	TRANSISTOR 2SC2223-F13
Q80	8-729-102-07	s	TRANSISTOR 2SC2223-F13
Q81	8-729-102-07	s	TRANSISTOR 2SC2223-F13
Q82	8-729-905-23	s	TRANSISTOR 2SA1576-R
Q83	8-729-905-23	s	TRANSISTOR 2SA1576-R
Q84	8-729-230-49	s	TRANSISTOR 2SC2412K-T-146-R
Q101	8-729-905-23	s	TRANSISTOR 2SA1576-R

(DM-87 BOARD : S/N 10341 and higher)

Ref. No. or Q'ty	Part No.	SP	Description
Q102	8-729-120-28	s	TRANSISTOR 2SC1623-L5L6
Q103	8-729-120-28	s	TRANSISTOR 2SC1623-L5L6
Q104	8-729-905-18	s	TRANSISTOR DTC144EU
Q105	8-729-905-23	s	TRANSISTOR 2SA1576-R
Q106	8-729-120-28	s	TRANSISTOR 2SC1623-L5L6
Q107	8-729-905-18	s	TRANSISTOR DTC144EU
Q108	8-729-202-38	s	TRANSISTOR 2SC3326N
Q109	8-729-202-38	s	TRANSISTOR 2SC3326N
Q110	8-729-120-28	s	TRANSISTOR 2SC1623-L5L6
Q111	8-729-905-18	s	TRANSISTOR DTC144EU
Q112	8-729-102-07	s	TRANSISTOR 2SC2223-F13
Q113	8-729-102-07	s	TRANSISTOR 2SC2223-F13
Q114	8-729-230-49	s	TRANSISTOR 2SC2712-YG
Q115	8-729-120-28	s	TRANSISTOR 2SC1623-L5L6
Q116	8-729-230-49	s	TRANSISTOR 2SC2712-YG
Q117	8-729-230-49	s	TRANSISTOR 2SC2712-YG
Q118	8-729-120-28	s	TRANSISTOR 2SC1623-L5L6
Q119	8-729-102-07	s	TRANSISTOR 2SC2223-F13
Q120	8-729-905-23	s	TRANSISTOR 2SA1576-R
Q121	8-729-230-49	s	TRANSISTOR 2SC2712-YG
Q122	8-729-102-07	s	TRANSISTOR 2SC2223-F13
Q123	8-729-230-49	s	TRANSISTOR 2SC2712-YG
Q124	8-729-120-28	s	TRANSISTOR 2SC1623-L5L6
Q125	8-729-230-49	s	TRANSISTOR 2SC2712-YG
Q126	8-729-230-49	s	TRANSISTOR 2SC2712-YG
Q127	8-729-102-07	s	TRANSISTOR 2SC2223-F13
Q130	8-729-905-23	s	TRANSISTOR 2SA1576-R
Q131	8-729-120-28	s	TRANSISTOR 2SC1623-L5L6
Q132	8-729-120-28	s	TRANSISTOR 2SC1623-L5L6
Q133	8-729-120-28	s	TRANSISTOR 2SC1623-L5L6
Q141	8-729-120-28	s	TRANSISTOR 2SC1623-L5L6
Q142	8-729-905-18	s	TRANSISTOR DTC144EU
Q143	8-729-905-18	s	TRANSISTOR DTC144EU
Q144	8-729-120-28	s	TRANSISTOR 2SC1623-L5L6
Q145	8-729-120-28	s	TRANSISTOR 2SC1623-L5L6
Q146	8-729-120-28	s	TRANSISTOR 2SC1623-L5L6
Q148	8-729-230-49	s	TRANSISTOR 2SC2712-YG
Q149	8-729-120-28	s	TRANSISTOR 2SC1623-L5L6
Q150	8-729-120-28	s	TRANSISTOR 2SC1623-L5L6
Q154	8-729-120-28	s	TRANSISTOR 2SC1623-L5L6
Q156	8-729-120-28	s	TRANSISTOR 2SC1623-L5L6
Q157	8-729-905-18	s	TRANSISTOR DTC144EU
Q158	8-729-905-18	s	TRANSISTOR DTC144EU
Q159	8-729-120-28	s	TRANSISTOR 2SC1623-L5L6
Q160	8-729-120-28	s	TRANSISTOR 2SC1623-L5L6
Q161	8-729-120-28	s	TRANSISTOR 2SC1623-L5L6
Q162	8-729-102-07	s	TRANSISTOR 2SC2223-F13
Q163	8-729-102-07	s	TRANSISTOR 2SC2223-F13
Q164	8-729-102-07	s	TRANSISTOR 2SC2223-F13
Q165	8-729-102-07	s	TRANSISTOR 2SC2223-F13
Q166	8-729-120-28	s	TRANSISTOR 2SC1623-L5L6
Q167	8-729-905-18	s	TRANSISTOR DTC144EU
Q175	8-729-905-12	s	TRANSISTOR DTA144EU
Q701	8-729-905-23	s	TRANSISTOR 2SA1576-R
Q701	8-729-120-28	s	TRANSISTOR 2SC1623-L5L6
Q702	8-729-120-28	s	TRANSISTOR 2SC1623-L5L6
Q703	8-729-905-12	s	TRANSISTOR DTA144EU
Q703	8-729-905-23	s	TRANSISTOR 2SA1576-R
Q704	8-729-202-38	s	TRANSISTOR 2SC3326N

(DM-87 BOARD : S/N 10341 and higher)

Ref. No. or Q'ty	Part No.	SP	Description
Q706	8-729-905-12	s	TRANSISTOR DTA144EU
Q707	8-729-905-18	s	TRANSISTOR DTC144EU
Q708	8-729-905-23	s	TRANSISTOR 2SA1576-R
Q709	8-729-120-28	s	TRANSISTOR 2SC1623-L5L6
Q712	8-729-905-18	s	TRANSISTOR DTC144EU
Q713	8-729-905-18	s	TRANSISTOR DTC144EU
Q714	8-729-905-18	s	TRANSISTOR DTC144EU
Q715	8-729-905-12	s	TRANSISTOR DTA144EU
Q716	8-729-905-12	s	TRANSISTOR DTA144EU
Q717	8-729-120-28	s	TRANSISTOR 2SC1623-L5L6
Q718	8-729-120-28	s	TRANSISTOR 2SC1623-L5L6
Q900	8-729-900-65	s	TRANSISTOR DTA144ES
Q901	8-729-905-18	s	TRANSISTOR DTC144EU
Q903	8-729-900-65	s	TRANSISTOR DTA144ES
Q904	8-729-900-89	s	TRANSISTOR DTC144ES
R1	1-216-837-11	s	METAL, CHIP 22K 5% 1/16W
R2	1-216-837-11	s	METAL, CHIP 22K 5% 1/16W
R3	1-216-821-11	s	METAL, CHIP 1K 5% 1/16W
R4	1-216-820-11	s	METAL, CHIP 820 5% 1/16W
R5	1-216-821-11	s	METAL, CHIP 1K 5% 1/16W
R6	1-216-829-11	s	METAL, CHIP 4.7K 5% 1/16W
R7	1-216-841-11	s	METAL, CHIP 47K 5% 1/16W
R8	1-218-672-11	s	METAL, CHIP 150 0.50% 1/16W
R9	1-216-833-11	s	METAL, CHIP 10K 5% 1/16W
R10	1-216-833-11	s	METAL, CHIP 10K 5% 1/16W
R11	1-218-698-11	s	METAL, CHIP 1.8K 0.50% 1/16W
R12	1-218-680-11	s	METAL, CHIP 330 0.50% 1/16W
R13	1-216-812-11	s	METAL, CHIP 180 5% 1/16W
R14	1-216-864-11	s	METAL, CHIP 0 5% 1/16W
R15	1-216-837-11	s	METAL, CHIP 22K 5% 1/16W
R16	1-216-837-11	s	METAL, CHIP 22K 5% 1/16W
R17	1-216-864-11	s	METAL, CHIP 0 5% 1/16W
R18	1-216-821-11	s	METAL, CHIP 1K 5% 1/16W
R19	1-216-809-11	s	METAL, CHIP 100 5% 1/16W
R20	1-216-817-11	s	METAL, CHIP 470 5% 1/16W
R21	1-216-837-11	s	METAL, CHIP 22K 5% 1/16W
R22	1-216-837-11	s	METAL, CHIP 22K 5% 1/16W
R23	1-218-680-11	s	METAL, CHIP 330 0.50% 1/16W
R24	1-216-817-11	s	METAL, CHIP 470 5% 1/16W
R25	1-216-817-11	s	METAL, CHIP 470 5% 1/16W
R26	1-218-680-11	s	METAL, CHIP 330 0.50% 1/16W
R27	1-218-313-11	s	METAL, CHIP 560 1% 1/16W
R28	1-216-821-11	s	METAL, CHIP 1K 5% 1/16W
R29	1-216-809-11	s	METAL, CHIP 100 5% 1/16W
R30	1-216-833-11	s	METAL, CHIP 10K 5% 1/16W
R31	1-216-833-11	s	METAL, CHIP 10K 5% 1/16W
R44	1-216-833-11	s	METAL, CHIP 10K 5% 1/16W
R45	1-216-833-11	s	METAL, CHIP 10K 5% 1/16W
R47	1-216-864-11	s	METAL, CHIP 0 5% 1/16W
R48	1-216-820-11	s	METAL, CHIP 820 5% 1/16W
R49	1-216-809-11	s	METAL, CHIP 100 5% 1/16W
R50	1-216-815-11	s	METAL, CHIP 330 5% 1/16W
R51	1-216-815-11	s	METAL, CHIP 330 5% 1/16W
R52	1-216-815-11	s	METAL, CHIP 330 5% 1/16W
R53	1-216-815-11	s	METAL, CHIP 330 5% 1/16W
R54	1-216-815-11	s	METAL, CHIP 330 5% 1/16W
R55	1-216-815-11	s	METAL, CHIP 330 5% 1/16W
R56	1-216-833-11	s	METAL, CHIP 10K 5% 1/16W
R57	1-216-821-11	s	METAL, CHIP 1K 5% 1/16W

(DM-87 BOARD : S/N 10341 and higher)

Ref. No. or Q'ty	Part No.	SP	Description
R58	1-216-821-11	s	METAL, CHIP 1K 5% 1/16W
R59	1-216-823-11	s	METAL, CHIP 1.5K 5% 1/16W
R60	1-218-672-11	s	METAL, CHIP 150 0.50% 1/16W
R61	1-218-271-11	s	METAL, CHIP 2K 5% 1/16W
R62	1-216-827-11	s	METAL, CHIP 3.3K 5% 1/16W
R63	1-218-289-11	s	METAL, CHIP 510 5% 1/16W
R64	1-216-865-11	s	METAL, CHIP 3K 5% 1/16W
R65	1-218-289-11	s	METAL, CHIP 510 5% 1/16W
R66	1-216-838-11	s	METAL, CHIP 27K 5% 1/16W
R67	1-216-837-11	s	METAL, CHIP 22K 5% 1/16W
R69	1-218-289-11	s	METAL, CHIP 510 5% 1/16W
R70	1-216-817-11	s	METAL, CHIP 470 5% 1/16W
R71	1-218-289-11	s	METAL, CHIP 510 5% 1/16W
R73	1-216-821-11	s	METAL, CHIP 1K 5% 1/16W
R74	1-218-457-11	s	METAL, CHIP 910 5% 1/16W
R75	1-218-289-11	s	METAL, CHIP 510 5% 1/16W
R80	1-216-821-11	s	METAL, CHIP 1K 5% 1/16W
R81	1-216-839-11	s	METAL, CHIP 33K 5% 1/16W
R82	1-216-839-11	s	METAL, CHIP 33K 5% 1/16W
R83	1-216-821-11	s	METAL, CHIP 1K 5% 1/16W
R84	1-216-820-11	s	METAL, CHIP 820 5% 1/16W
R85	1-216-827-11	s	METAL, CHIP 3.3K 5% 1/16W
R86	1-216-838-11	s	METAL, CHIP 27K 5% 1/16W
R87	1-216-837-11	s	METAL, CHIP 22K 5% 1/16W
R88	1-216-864-11	s	METAL, CHIP 0 5% 1/16W
R89	1-218-289-11	s	METAL, CHIP 510 5% 1/16W
R90	1-216-817-11	s	METAL, CHIP 470 5% 1/16W
R91	1-216-825-11	s	METAL, CHIP 2.2K 5% 1/16W
R92	1-216-838-11	s	METAL, CHIP 27K 5% 1/16W
R93	1-216-837-11	s	METAL, CHIP 22K 5% 1/16W
R94	1-216-864-11	s	METAL, CHIP 0 5% 1/16W
R95	1-216-817-11	s	METAL, CHIP 470 5% 1/16W
R96	1-216-825-11	s	METAL, CHIP 2.2K 5% 1/16W
R98	1-216-820-11	s	METAL, CHIP 820 5% 1/16W
R99	1-216-809-11	s	METAL, CHIP 100 5% 1/16W
R100	1-216-833-11	s	METAL, CHIP 10K 5% 1/16W
R101	1-216-833-11	s	METAL, CHIP 10K 5% 1/16W
R104	1-218-289-11	s	METAL, CHIP 510 5% 1/16W
R105	1-216-829-11	s	METAL, CHIP 4.7K 5% 1/16W
R106	1-216-829-11	s	METAL, CHIP 4.7K 5% 1/16W
R107	1-216-833-11	s	METAL, CHIP 10K 5% 1/16W
R108	1-216-833-11	s	METAL, CHIP 10K 5% 1/16W
R109	1-216-822-11	s	METAL, CHIP 1.2K 5% 1/16W
R110	1-216-814-11	s	METAL, CHIP 270 5% 1/16W
R111	1-216-837-11	s	METAL, CHIP 22K 5% 1/16W
R112	1-216-837-11	s	METAL, CHIP 22K 5% 1/16W
R113	1-216-821-11	s	METAL, CHIP 1K 5% 1/16W
R114	1-216-821-11	s	METAL, CHIP 1K 5% 1/16W
R115	1-216-833-11	s	METAL, CHIP 10K 5% 1/16W
R116	1-216-841-11	s	METAL, CHIP 47K 5% 1/16W
R117	1-216-841-11	s	METAL, CHIP 47K 5% 1/16W
R118	1-216-821-11	s	METAL, CHIP 1K 5% 1/16W
R119	1-216-821-11	s	METAL, CHIP 1K 5% 1/16W
R120	1-216-833-11	s	METAL, CHIP 10K 5% 1/16W
R121	1-216-833-11	s	METAL, CHIP 10K 5% 1/16W
R122	1-216-815-11	s	METAL, CHIP 330 5% 1/16W
R123	1-216-814-11	s	METAL, CHIP 270 5% 1/16W
R125	1-218-670-11	s	METAL, CHIP 120 0.50% 1/16W
R128	1-216-835-11	s	METAL, CHIP 15K 5% 1/16W

(DM-87 BOARD : S/N 10341 and higher)

Ref. No. or Q'ty	Part No.	SP	Description
R130	1-216-822-11	s	METAL, CHIP 1.2K 5% 1/16W
R131	1-216-817-11	s	METAL, CHIP 470 5% 1/16W
R132	1-216-831-11	s	METAL, CHIP 6.8K 5% 1/16W
R133	1-216-827-11	s	METAL, CHIP 3.3K 5% 1/16W
R134	1-216-833-11	s	METAL, CHIP 10K 5% 1/16W
R135	1-216-833-11	s	METAL, CHIP 10K 5% 1/16W
R136	1-218-313-11	s	METAL, CHIP 560 1% 1/16W
R137	1-218-680-11	s	METAL, CHIP 330 0.50% 1/16W
R138	1-216-820-11	s	METAL, CHIP 820 5% 1/16W
R139	1-216-833-11	s	METAL, CHIP 10K 5% 1/16W
R140	1-216-833-11	s	METAL, CHIP 10K 5% 1/16W
R141	1-216-821-11	s	METAL, CHIP 1K 5% 1/16W
R142	1-216-809-11	s	METAL, CHIP 100 5% 1/16W
R143	1-216-831-11	s	METAL, CHIP 6.8K 5% 1/16W
R144	1-216-838-11	s	METAL, CHIP 27K 5% 1/16W
R199	1-216-809-11	s	METAL, CHIP 100 5% 1/16W
R200	1-216-841-11	s	METAL, CHIP 47K 5% 1/16W
R201	1-216-833-11	s	METAL, CHIP 10K 5% 1/16W
R202	1-216-821-11	s	METAL, CHIP 1K 5% 1/16W
R205	1-216-821-11	s	METAL, CHIP 1K 5% 1/16W
R206	1-216-823-11	s	METAL, CHIP 1.5K 5% 1/16W
R207	1-216-825-11	s	METAL, CHIP 2.2K 5% 1/16W
R208	1-218-289-11	s	METAL, CHIP 510 5% 1/16W
R209	1-218-706-11	s	METAL, CHIP 3.9K 0.50% 1/16W
R210	1-218-651-11	s	METAL, CHIP 20 0.50% 1/16W
R211	1-216-817-11	s	METAL, CHIP 470 5% 1/16W
R212	1-218-289-11	s	METAL, CHIP 510 5% 1/16W
R213	1-216-825-11	s	METAL, CHIP 2.2K 5% 1/16W
R214	1-216-817-11	s	METAL, CHIP 470 5% 1/16W
R215	1-216-825-11	s	METAL, CHIP 2.2K 5% 1/16W
R217	1-218-657-11	s	METAL, CHIP 36 5% 1/16W
R218	1-216-804-11	s	METAL, CHIP 39 5% 1/16W
R219	1-216-837-11	s	METAL, CHIP 22K 5% 1/16W
R220	1-216-837-11	s	METAL, CHIP 22K 5% 1/16W
R221	1-216-825-11	s	METAL, CHIP 2.2K 5% 1/16W
R222	1-216-833-11	s	METAL, CHIP 10K 5% 1/16W
R223	1-216-821-11	s	METAL, CHIP 1K 5% 1/16W
R224	1-216-815-11	s	METAL, CHIP 330 5% 1/16W
R227	1-216-823-11	s	METAL, CHIP 1.5K 5% 1/16W
R229	1-216-827-11	s	METAL, CHIP 3.3K 5% 1/16W
R230	1-216-827-11	s	METAL, CHIP 3.3K 5% 1/16W
R231	1-218-289-11	s	METAL, CHIP 510 5% 1/16W
R232	1-218-289-11	s	METAL, CHIP 510 5% 1/16W
R233	1-218-706-11	s	METAL, CHIP 3.9K 0.50% 1/16W
R234	1-218-344-11	s	METAL, CHIP 7.5K 0.50% 1/16W
R235	1-218-289-11	s	METAL, CHIP 510 5% 1/16W
R236	1-218-289-11	s	METAL, CHIP 510 5% 1/16W
R237	1-216-825-11	s	METAL, CHIP 2.2K 5% 1/16W
R238	1-216-825-11	s	METAL, CHIP 2.2K 5% 1/16W
R240	1-216-827-11	s	METAL, CHIP 3.3K 5% 1/16W
R241	1-216-809-11	s	METAL, CHIP 100 5% 1/16W
R262	1-216-833-11	s	METAL, CHIP 10K 5% 1/16W
R263	1-216-837-11	s	METAL, CHIP 22K 5% 1/16W
R264	1-216-837-11	s	METAL, CHIP 22K 5% 1/16W
R265	1-216-833-11	s	METAL, CHIP 10K 5% 1/16W
R266	1-216-809-11	s	METAL, CHIP 100 5% 1/16W
R268	1-216-803-11	s	METAL, CHIP 33 5% 1/16W
R299	1-216-857-11	s	METAL, CHIP 1M 5% 1/16W
R300	1-216-821-11	s	METAL, CHIP 1K 5% 1/16W

(DM-87 BOARD : S/N 10341 and higher)

Ref. No. or Q'ty	Part No.	SP	Description
R301	1-216-844-11	s	METAL, CHIP 82K 5% 1/16W
R302	1-216-864-11	s	METAL, CHIP 0 5% 1/16W
R303	1-216-839-11	s	METAL, CHIP 33K 5% 1/16W
R304	1-216-842-11	s	METAL, CHIP 56K 5% 1/16W
R305	1-218-313-11	s	METAL CHIP 560 1% 1//10W
R306	1-216-821-11	s	METAL, CHIP 1K 5% 1/16W
R307	1-216-821-11	s	METAL, CHIP 1K 5% 1/16W
R308	1-218-700-11	s	METAL, CHIP 2.2K 0.50% 1/16W
R309	1-218-700-11	s	METAL, CHIP 2.2K 0.50% 1/16W
R310	1-216-821-11	s	METAL, CHIP 1K 5% 1/16W
R311	1-216-821-11	s	METAL, CHIP 1K 5% 1/16W
R312	1-216-825-11	s	METAL, CHIP 2.2K 5% 1/16W
R313	1-216-853-11	s	METAL, CHIP 470K 5% 1/16W
R314	1-216-857-11	s	METAL, CHIP 1M 5% 1/16W
R315	1-216-821-11	s	METAL, CHIP 1K 5% 1/16W
R316	1-216-844-11	s	METAL, CHIP 82K 5% 1/16W
R317	1-216-864-11	s	METAL, CHIP 0 5% 1/16W
R318	1-216-839-11	s	METAL, CHIP 33K 5% 1/16W
R319	1-216-842-11	s	METAL, CHIP 56K 5% 1/16W
R320	1-216-686-11	s	METAL, CHIP 470 5% 1/16W
R321	1-216-821-11	s	METAL, CHIP 1K 5% 1/16W
R322	1-216-826-11	s	METAL, CHIP 2.7K 5% 1/16W
R323	1-218-700-11	s	METAL, CHIP 2.2K 0.50% 1/16W
R324	1-218-700-11	s	METAL, CHIP 2.2K 0.50% 1/16W
R325	1-216-825-11	s	METAL, CHIP 2.2K 5% 1/16W
R327	1-218-740-11	s	METAL, CHIP 100K 0.50% 1/16W
R328	1-216-864-11	s	METAL, CHIP 0 5% 1/16W
R329	1-216-815-11	s	METAL, CHIP 330 5% 1/16W
R330	1-216-853-11	s	METAL, CHIP 470K 5% 1/16W
R331	1-216-820-11	s	METAL, CHIP 820 5% 1/16W
R332	1-218-313-11	s	METAL, CHIP 560 1% 1/16W
R333	1-216-839-11	s	METAL, CHIP 33K 5% 1/16W
R334	1-216-821-11	s	METAL, CHIP 1K 5% 1/16W
R335	1-216-837-11	s	METAL, CHIP 22K 5% 1/16W
R336	1-216-834-11	s	METAL, CHIP 12K 5% 1/16W
R337	1-216-837-11	s	METAL, CHIP 22K 5% 1/16W
R338	1-216-845-11	s	METAL, CHIP 100K 5% 1/16W
R339	1-216-833-11	s	METAL, CHIP 10K 5% 1/16W
R340	1-216-845-11	s	METAL, CHIP 100K 5% 1/16W
R341	1-218-732-11	s	METAL, CHIP 47K 0.50% 1/16W
R342	1-216-822-11	s	METAL, CHIP 1.2K 5% 1/16W
R343	1-218-705-11	s	METAL, CHIP 3.6K 0.50% 1/16W
R344	1-247-901-11	s	CARBON, 820K 5% 1/16W
R345	1-216-841-11	s	METAL, CHIP 47K 5% 1/16W
R345	1-216-841-11	s	METAL, CHIP 47K 5% 1/16W
R346	1-216-841-11	s	METAL, CHIP 47K 5% 1/16W
R347	1-216-816-11	s	METAL, CHIP 390 5% 1/16W
R348	1-216-817-11	s	METAL, CHIP 470 5% 1/16W
R349	1-216-841-11	s	METAL, CHIP 47K 5% 1/16W
R350	1-216-841-11	s	METAL, CHIP 47K 5% 1/16W
R351	1-216-841-11	s	METAL, CHIP 47K 5% 1/16W
R352	1-216-841-11	s	METAL, CHIP 47K 5% 1/16W
R353	1-216-816-11	s	METAL, CHIP 390 5% 1/16W
R354	1-216-853-11	s	METAL, CHIP 470K 5% 1/16W
R355	1-218-700-11	s	METAL, CHIP 2.2K 0.50% 1/16W
R357	1-216-841-11	s	METAL, CHIP 47K 5% 1/16W
R358	1-216-838-11	s	METAL, CHIP 27K 5% 1/16W
R359	1-216-833-11	s	METAL, CHIP 10K 5% 1/16W
R360	1-216-809-11	s	METAL, CHIP 100 5% 1/16W

(DM-87 BOARD : S/N 10341 and higher)

Ref. No. or Q'ty	Part No.	SP	Description
R361	1-216-821-11	s	METAL, CHIP 1K 5% 1/16W
R362	1-218-288-11	s	METAL, CHIP 300 5% 1/16W
R364	1-218-288-11	s	METAL, CHIP 300 5% 1/16W
R365	1-216-809-11	s	METAL, CHIP 100 5% 1/16W
R366	1-216-825-11	s	METAL, CHIP 2.2K 5% 1/16W
R367	1-216-821-11	s	METAL, CHIP 1K 5% 1/16W
R368	1-218-706-11	s	METAL, CHIP 3.9K 0.50% 1/16W
R369	1-216-821-11	s	METAL, CHIP 1K 5% 1/16W
R370	1-216-833-11	s	METAL, CHIP 10K 5% 1/16W
R371	1-218-285-11	s	METAL, CHIP 75 5% 1/16W
R372	1-216-820-11	s	METAL, CHIP 820 5% 1/16W
R373	1-216-833-11	s	METAL, CHIP 10K 5% 1/16W
R374	1-216-833-11	s	METAL, CHIP 10K 5% 1/16W
R375	1-216-821-11	s	METAL, CHIP 1K 5% 1/16W
R376	1-218-700-11	s	METAL, CHIP 2.2K 0.50% 1/16W
R377	1-218-295-11	s	METAL, CHIP 4.3K 5% 1/16W
R379	1-216-829-11	s	METAL, CHIP 4.7K 5% 1/16W
R380	1-216-838-11	s	METAL, CHIP 27K 5% 1/16W
R381	1-216-837-11	s	METAL, CHIP 22K 5% 1/16W
R383	1-216-817-11	s	METAL, CHIP 470 5% 1/16W
R384	1-216-817-11	s	METAL, CHIP 470 5% 1/16W
R385	1-218-482-11	s	METAL, CHIP 430 5% 1/16W
R387	1-216-864-11	s	METAL, CHIP 0 5% 1/16W
R388	1-216-821-11	s	METAL, CHIP 1K 5% 1/16W
R389	1-216-825-11	s	METAL, CHIP 2.2K 5% 1/16W
R391	1-216-825-11	s	METAL, CHIP 2.2K 5% 1/16W
R392	1-216-809-11	s	METAL, CHIP 100 5% 1/16W
R393	1-216-809-11	s	METAL, CHIP 100 5% 1/16W
R394	1-216-827-11	s	METAL, CHIP 3.3K 5% 1/16W
R395	1-218-313-11	s	METAL, CHIP 560 1% 1/16W
R396	1-218-704-11	s	METAL, CHIP 3.3K 0.50% 1/16W
R397	1-216-833-11	s	METAL, CHIP 10K 5% 1/16W
R398	1-216-821-11	s	METAL, CHIP 1K 5% 1/16W
R399	1-216-833-11	s	METAL, CHIP 10K 5% 1/16W
R400	1-218-285-11	s	METAL, CHIP 75 5% 1/16W
R401	1-216-820-11	s	METAL, CHIP 820 5% 1/16W
R402	1-216-833-11	s	METAL, CHIP 10K 5% 1/16W
R403	1-216-833-11	s	METAL, CHIP 10K 5% 1/16W
R404	1-216-821-11	s	METAL, CHIP 1K 5% 1/16W
R405	1-218-700-11	s	METAL, CHIP 2.2K 0.50% 1/16W
R406	1-218-704-11	s	METAL, CHIP 3.3K 0.50% 1/16W
R408	1-216-829-11	s	METAL, CHIP 4.7K 5% 1/16W
R409	1-216-838-11	s	METAL, CHIP 27K 5% 1/16W
R410	1-216-837-11	s	METAL, CHIP 22K 5% 1/16W
R412	1-216-821-11	s	METAL, CHIP 1K 5% 1/16W
R413	1-216-821-11	s	METAL, CHIP 1K 5% 1/16W
R421	1-216-809-11	s	METAL, CHIP 100 5% 1/16W
R422	1-216-825-11	s	METAL, CHIP 2.2K 5% 1/16W
R423	1-216-833-11	s	METAL, CHIP 10K 5% 1/16W
R424	1-216-823-11	s	METAL, CHIP 1.5K 5% 1/16W
R425	1-216-817-11	s	METAL, CHIP 470 5% 1/16W
R426	1-216-821-11	s	METAL, CHIP 1K 5% 1/16W
R427	1-216-823-11	s	METAL, CHIP 1.5K 5% 1/16W
R429	1-216-827-11	s	METAL, CHIP 3.3K 5% 1/16W
R430	1-218-883-11	s	METAL, CHIP 33K 0.50 1/16W
R431	1-218-883-11	s	METAL, CHIP 33K 0.50 1/16W
R464	1-216-837-11	s	METAL, CHIP 22K 5% 1/16W
R465	1-216-837-11	s	METAL, CHIP 22K 5% 1/16W
R466	1-216-845-11	s	METAL, CHIP 100K 5% 1/16W

(DM-87 BOARD : S/N 10341 and higher)

Ref. No. or Q'ty	Part No.	SP	Description
R467	1-216-833-11	s	METAL, CHIP 10K 5% 1/16W
R468	1-216-821-11	s	METAL, CHIP 1K 5% 1/16W
R469	1-216-821-11	s	METAL, CHIP 1K 5% 1/16W
R470	1-218-289-11	s	METAL, CHIP 510 5% 1/16W
R471	1-216-829-11	s	METAL, CHIP 4.7K 5% 1/16W
R472	1-216-829-11	s	METAL, CHIP 4.7K 5% 1/16W
R473	1-218-289-11	s	METAL, CHIP 510 5% 1/16W
R474	1-216-821-11	s	METAL, CHIP 1K 5% 1/16W
R475	1-216-821-11	s	METAL, CHIP 1K 5% 1/16W
R476	1-218-272-11	s	METAL, CHIP 5.1K 5% 1/16W
R477	1-216-825-11	s	METAL, CHIP 2.2K 5% 1/16W
R478	1-216-825-11	s	METAL, CHIP 2.2K 5% 1/16W
R479	1-216-809-11	s	METAL, CHIP 100 5% 1/16W
R480	1-216-825-11	s	METAL, CHIP 2.2K 5% 1/16W
R482	1-216-837-11	s	METAL, CHIP 22K 5% 1/16W
R483	1-216-809-11	s	METAL, CHIP 100 5% 1/16W
R484	1-216-833-11	s	METAL, CHIP 10K 5% 1/16W
R485	1-216-864-11	s	METAL, CHIP 0 5% 1/16W
R486	1-216-821-11	s	METAL, CHIP 1K 5% 1/16W
R487	1-216-837-11	s	METAL, CHIP 22K 5% 1/16W
R488	1-216-837-11	s	METAL, CHIP 22K 5% 1/16W
R489	1-216-822-11	s	METAL, CHIP 1.2K 5% 1/16W
R490	1-218-700-11	s	METAL, CHIP 2.2K 0.50% 1/16W
R493	1-216-822-11	s	METAL, CHIP 1.2K 5% 1/16W
R495	1-216-833-11	s	METAL, CHIP 10K 5% 1/16W
R496	1-216-825-11	s	METAL, CHIP 2.2K 5% 1/16W
R497	1-216-833-11	s	METAL, CHIP 10K 5% 1/16W
R498	1-218-740-11	s	METAL, CHIP 100K 0.50% 1/16W
R499	1-216-833-11	s	METAL, CHIP 10K 5% 1/16W
R500	1-216-833-11	s	METAL, CHIP 10K 5% 1/16W
R501	1-216-809-11	s	METAL, CHIP 100 5% 1/16W
R502	1-216-833-11	s	METAL, CHIP 10K 5% 1/16W
R503	1-216-805-11	s	METAL, CHIP 47 5% 1/16W
R504	1-216-809-11	s	METAL, CHIP 100 5% 1/16W
R505	1-216-825-11	s	METAL, CHIP 2.2K 5% 1/16W
R507	1-216-817-11	s	METAL, CHIP 470 5% 1/16W
R511	1-218-700-11	s	METAL, CHIP 2.2K 0.50% 1/16W
R512	1-218-706-11	s	METAL, CHIP 3.9K 0.50% 1/16W
R515	1-218-714-11	s	METAL, CHIP 8.2K 0.50% 1/16W
R516	1-216-795-11	s	METAL, CHIP 6.8K 0.50% 1/16W
R517	1-218-295-11	s	METAL, CHIP 4.3K 5% 1/16W
R518	1-216-720-11	s	METAL, CHIP 6.8K 0.50% 1/16W
R519	1-216-805-11	s	METAL, CHIP 47 5% 1/16W
R522	1-216-821-11	s	METAL, CHIP 1K 5% 1/16W
R523	1-216-825-11	s	METAL, CHIP 2.2K 5% 1/16W
R524	1-216-825-11	s	METAL, CHIP 2.2K 5% 1/16W
R526	1-216-809-11	s	METAL, CHIP 100 5% 1/16W
R527	1-216-809-11	s	METAL, CHIP 100 5% 1/16W
R528	1-216-837-11	s	METAL, CHIP 22K 5% 1/16W
R529	1-216-837-11	s	METAL, CHIP 22K 5% 1/16W
R530	1-216-845-11	s	METAL, CHIP 100K 5% 1/16W
R531	1-216-833-11	s	METAL, CHIP 10K 5% 1/16W
R532	1-216-821-11	s	METAL, CHIP 1K 5% 1/16W
R533	1-216-821-11	s	METAL, CHIP 1K 5% 1/16W
R534	1-216-829-11	s	METAL, CHIP 4.7K 5% 1/16W
R535	1-218-289-11	s	METAL, CHIP 510 5% 1/16W
R536	1-216-829-11	s	METAL, CHIP 4.7K 5% 1/16W
R537	1-218-289-11	s	METAL, CHIP 510 5% 1/16W
R538	1-216-821-11	s	METAL, CHIP 1K 5% 1/16W

(DM-87 BOARD : S/N 10341 and higher)

Ref. No. or Q'ty	Part No.	SP	Description
R539	1-216-821-11	s	METAL, CHIP 1K 5% 1/16W
R540	1-218-272-11	s	METAL, CHIP 5.1K 5% 1/16W
R541	1-216-825-11	s	METAL, CHIP 2.2K 5% 1/16W
R542	1-216-825-11	s	METAL, CHIP 2.2K 5% 1/16W
R543	1-216-809-11	s	METAL, CHIP 100 5% 1/16W
R544	1-216-825-11	s	METAL, CHIP 2.2K 5% 1/16W
R545	1-216-821-11	s	METAL, CHIP 1K 5% 1/16W
R546	1-216-823-11	s	METAL, CHIP 1.5K 5% 1/16W
R547	1-216-825-11	s	METAL, CHIP 2.2K 5% 1/16W
R548	1-216-809-11	s	METAL, CHIP 100 5% 1/16W
R549	1-216-833-11	s	METAL, CHIP 10K 5% 1/16W
R550	1-216-823-11	s	METAL, CHIP 1.5K 5% 1/16W
R551	1-216-813-11	s	METAL, CHIP 220 5% 1/16W
R552	1-216-821-11	s	METAL, CHIP 1K 5% 1/16W
R553	1-216-809-11	s	METAL, CHIP 100 5% 1/16W
R554	1-216-809-11	s	METAL, CHIP 100 5% 1/16W
R555	1-216-823-11	s	METAL, CHIP 1.5K 5% 1/16W
R556	1-216-821-11	s	METAL, CHIP 1K 5% 1/16W
R557	1-216-821-11	s	METAL, CHIP 1K 5% 1/16W
R558	1-216-809-11	s	METAL, CHIP 100 5% 1/16W
R559	1-216-833-11	s	METAL, CHIP 10K 5% 1/16W
R560	1-216-833-11	s	METAL, CHIP 10K 5% 1/16W
R561	1-216-833-11	s	METAL, CHIP 10K 5% 1/16W
R562	1-216-833-11	s	METAL, CHIP 10K 5% 1/16W
R565	1-216-833-11	s	METAL, CHIP 10K 5% 1/16W
R573	1-216-833-11	s	METAL, CHIP 10K 5% 1/16W
R575	1-216-864-11	s	METAL, CHIP 0 5% 1/16W
R586	1-216-801-11	s	METAL, CHIP 22 5% 1/16W
R587	1-216-833-11	s	METAL, CHIP 10K 5% 1/16W
R590	1-218-727-11	s	METAL, CHIP 30K 0.50% 1/16W
R591	1-216-838-11	s	METAL, CHIP 27K 5% 1/16W
R592	1-216-838-11	s	METAL, CHIP 27K 5% 1/16W
R593	1-216-837-11	s	METAL, CHIP 22K 5% 1/16W
R601	1-216-838-11	s	METAL, CHIP 27K 5% 1/16W
R605	1-218-271-11	s	METAL, CHIP 2K 5% 1/16W
R606	1-216-836-11	s	METAL, CHIP 18K 5% 1/16W
R701	1-218-688-11	s	METAL, CHIP 680 0.50% 1/16W
R707	1-216-821-11	s	METAL, CHIP 1K 5% 1/16W
R708	1-216-809-11	s	METAL, CHIP 100 5% 1/16W
R709	1-216-821-11	s	METAL, CHIP 1K 5% 1/16W
R710	1-216-838-11	s	METAL, CHIP 27K 5% 1/16W
R711	1-216-809-11	s	METAL, CHIP 100 5% 1/16W
R712	1-216-825-11	s	METAL, CHIP 2.2K 5% 1/16W
R713	1-216-817-11	s	METAL, CHIP 470 5% 1/16W
R714	1-218-883-11	s	METAL, CHIP 33K 0.50 1/16W
R715	1-216-817-11	s	METAL, CHIP 470 5% 1/16W
R716	1-218-482-11	s	METAL, CHIP 430 5% 1/16W
R718	1-216-825-11	s	METAL, CHIP 2.2K 5% 1/16W
R719	1-218-672-11	s	METAL, CHIP 150 0.50% 1/16W
R720	1-216-821-11	s	METAL, CHIP 1K 5% 1/16W
R721	1-216-837-11	s	METAL, CHIP 22K 5% 1/16W
R723	1-216-809-11	s	METAL, CHIP 100 5% 1/16W
R724	1-216-809-11	s	METAL, CHIP 100 5% 1/16W
R727	1-216-864-11	s	METAL, CHIP 0 5% 1/16W
R729	1-216-864-11	s	METAL, CHIP 0 5% 1/16W
R731	1-216-864-11	s	METAL, CHIP 0 5% 1/16W
R733	1-216-833-11	s	METAL, CHIP 10K 5% 1/16W
R736	1-216-864-11	s	METAL, CHIP 0 5% 1/16W
R737	1-216-841-11	s	METAL, CHIP 47K 5% 1/16W

(DM-87 BOARD : S/N 10341 and higher)

Ref. No. or Q'ty	Part No.	SP	Description
R738	1-216-833-11	s	METAL, CHIP 10K 5% 1/16W
R740	1-218-708-11	s	METAL, CHIP 4.7K 0.50% 1/16W
R741	1-218-705-11	s	METAL, CHIP 3.6K 0.50% 1/16W
R742	1-216-832-11	s	METAL, CHIP 8.2K 5% 1/16W
R743	1-216-833-11	s	METAL, CHIP 10K 5% 1/16W
R744	1-216-833-11	s	METAL, CHIP 10K 5% 1/16W
R745	1-216-833-11	s	METAL, CHIP 10K 5% 1/16W
R746	1-216-815-11	s	METAL, CHIP 330 5% 1/16W
R747	1-216-809-11	s	METAL, CHIP 100 5% 1/16W
R748	1-216-821-11	s	METAL, CHIP 1K 5% 1/16W
R749	1-216-809-11	s	METAL, CHIP 100 5% 1/16W
R750	1-216-825-11	s	METAL, CHIP 2.2K 5% 1/16W
R751	1-216-817-11	s	METAL, CHIP 470 5% 1/16W
R752	1-218-724-11	s	METAL, CHIP 22K 0.50% 1/16W
R753	1-216-817-11	s	METAL, CHIP 470 5% 1/16W
R754	1-218-482-11	s	METAL, CHIP 430 5% 1/16W
R756	1-216-833-11	s	METAL, CHIP 10K 5% 1/16W
R757	1-216-821-11	s	METAL, CHIP 1K 5% 1/16W
R758	1-216-821-11	s	METAL, CHIP 1K 5% 1/16W
R759	1-216-821-11	s	METAL, CHIP 1K 5% 1/16W
R780	1-216-821-11	s	METAL, CHIP 1K 5% 1/16W
R785	1-216-845-11	s	METAL, CHIP 100K 5% 1/16W
R786	1-216-845-11	s	METAL, CHIP 100K 5% 1/16W
R787	1-215-440-00	s	METAL 6.2K 1% 1/6W
R787	1-218-290-11	s	METAL 6.2K 5% 1/6W
R788	1-218-288-11	s	METAL, CHIP 300 5% 1/16W
R789	1-216-839-11	s	METAL, CHIP 33K 5% 1/16W
R790	1-216-704-11	s	METAL, CHIP 3.3K 0.50% 1/16W
R791	1-216-833-11	s	METAL, CHIP 10K 5% 1/16W
R792	1-216-821-11	s	METAL, CHIP 1K 5% 1/16W
R793	1-216-829-11	s	METAL, CHIP 4.7K 5% 1/16W
R794	1-216-821-11	s	METAL, CHIP 1K 5% 1/16W
R795	1-216-837-11	s	METAL, CHIP 22K 5% 1/16W
R796	1-218-720-11	s	METAL, CHIP 15K 0.50% 1/16W
R797	1-216-838-11	s	METAL, CHIP 27K 5% 1/6W
R798	1-216-837-11	s	METAL, CHIP 22K 5% 1/6W
R799	1-216-817-11	s	METAL, CHIP 470 5% 1/16W
R800	1-216-817-11	s	METAL, CHIP 470 5% 1/16W
R801	1-216-817-11	s	METAL, CHIP 470 5% 1/16W
R802	1-216-817-11	s	METAL, CHIP 470 5% 1/16W
R803	1-216-834-11	s	METAL, CHIP 12K 5% 1/16W
R804	1-216-833-11	s	METAL, CHIP 10K 5% 1/16W
R805	1-218-274-11	s	METAL, CHIP 22K 0.50% 1/16W
R807	1-216-864-11	s	METAL, CHIP 0 5% 1/16W
R808	1-218-274-11	s	METAL, CHIP 22K 0.50% 1/16W
R809	1-249-433-11	s	CARBON, 22K 5% 1/4W
R810	1-249-433-11	s	CARBON, 22K 5% 1/4W
R900	1-216-831-00	s	METAL, CHIP 6.8K 5% 1/16W
R901	1-216-857-11	s	METAL, CHIP 1.0M 5% 1/16W
R902	1-218-707-11	s	METAL, CHIP 4.3K 0.50% 1/16W
R903	1-216-817-11	s	METAL, CHIP 470 5% 1/16W
R904	1-216-817-11	s	METAL, CHIP 470 5% 1/16W
R905	1-216-842-11	s	METAL, CHIP 56K 5% 1/16W
R950	1-216-388-00	s	METAL, CHIP 36K 0.50% 1/10W
RV2	1-241-261-11	s	RES, ADJ, CERMET 1K
RV3	1-241-261-11	s	RES, ADJ, CERMET 1K
RV4	1-241-262-11	s	RES, ADJ, CERMET 2K
RV5	1-241-262-11	s	RES, ADJ, CERMET 2K
RV8	1-238-800-11	s	RES, ADJ METAL 2K

(DM-87 BOARD : S/N 10341 and higher)

Ref. No. or Q'ty	Part No.	SP	Description
RV9	1-238-800-11	s	RES, ADJ METAL 2K
RV10	1-238-799-11	s	RES, ADJ METAL 1K
RV11	1-238-802-11	s	RES, ADJ METAL 10K
RV12	1-238-804-11	s	RES, ADJ METAL 50K
RV13	1-238-803-11	s	RES, ADJ METAL 20K
RV15	1-241-262-11	s	RES, ADJ, CERMET 2K
RV19	1-241-262-11	s	RES, ADJ, CERMET 2K
RV20	1-241-262-11	s	RES, ADJ, CERMET 2K
RV21	1-241-261-11	s	RES, ADJ, CERMET 1K
RV23	1-241-262-11	s	RES, ADJ, CERMET 2K
RV24	1-241-262-11	s	RES, ADJ, CERMET 2K
RV25	1-241-262-11	s	RES, ADJ, CERMET 2K
RV26	1-241-261-11	s	RES, ADJ, CERMET 1K
RV27	1-241-261-11	s	RES, ADJ, CERMET 1K
RV28	1-238-799-11	s	RES, ADJ METAL 1K
RV702	1-238-798-11	s	RES, ADJ METAL 500
TH100	1-808-269-11	s	THERMISTER
TH101	1-808-269-11	s	THERMISTER
TH102	1-800-202-XX	s	THERMISTOR S-10K
X501	1-577-080-11	s	CRYSTAL 3.579545Hz

DP-101 BOARD

Ref. No. or Q'ty	Part No.	SP	Description
D101	8-719-942-19	s	LED LB402VK
D102	8-719-942-19	s	LED LB402VK
D103	8-719-942-19	s	LED LB402VK
D104	8-719-942-19	s	LED LB402VK

FL-129 BOARD

Ref. No. or Q'ty	Part No.	SP	Description
1pc	A-8276-245-A	o	MOUNTED CIRCUIT BOARD, FL-129
C37	1-135-166-21	s	TANTALUM, CHIP 47uF 10% 10V
C38	1-135-166-21	s	TANTALUM, CHIP 47uF 10% 10V
C39	1-163-038-00	s	CERAMIC, CHIP 0.1uF 25V
C40	1-162-970-11	s	CERAMIC, CHIP 0.01uF 10% 25V
C41	1-162-970-11	s	CERAMIC, CHIP 0.01uF 10% 25V
C42	1-163-145-00	s	CERAMIC, CHIP 0.0015uF 5% 50V
C43	1-163-038-00	s	CERAMIC, CHIP 0.1uF 25V
C44	1-162-924-11	s	CERAMIC 56PF 5% 50V
C45	1-162-928-11	s	CERAMIC, CHIP 120PF 5% 50V
C46	1-164-816-11	s	CERAMIC 220PF 2% 50V
C47	1-162-959-11	s	CERAMIC, CHIP 330PF 5% 50V
C48	1-164-383-11	s	CERAMIC 110PF 5% 50V
C49	1-164-392-11	s	CERAMIC 390PF 5% 50V
C50	1-164-238-11	s	CERAMIC, CHIP 36PF 10% 50V
C51	1-164-466-11	s	CERAMIC 240PF 5% 50V
C52	1-162-970-11	s	CERAMIC, CHIP 0.01uF 10% 25V
C54	1-162-920-11	s	CERAMIC, CHIP 27PF 5% 50V
C56	1-164-393-11	s	CERAMIC 430PF 5% 50V
C59	1-162-970-11	s	CERAMIC, CHIP 0.01uF 10% 25V
C60	1-163-038-00	s	CERAMIC, CHIP 0.1uF 25V
C62	1-162-970-11	s	CERAMIC, CHIP 0.01uF 10% 25V
C63	1-162-923-11	s	CERAMIC, CHIP 47PF 5% 50V
C64	1-162-923-11	s	CERAMIC, CHIP 47PF 5% 50V
C65	1-162-970-11	s	CERAMIC, CHIP 0.01uF 10% 25V
C66	1-162-970-11	s	CERAMIC, CHIP 0.01uF 10% 25V
C67	1-162-923-11	s	CERAMIC, CHIP 47PF 5% 50V
C68	1-162-923-11	s	CERAMIC, CHIP 47PF 5% 50V
C69	1-162-970-11	s	CERAMIC, CHIP 0.01uF 10% 25V
C70	1-162-970-11	s	CERAMIC, CHIP 0.01uF 10% 25V
C72	1-135-166-21	s	TANTALUM, CHIP 47uF 10% 10V
C74	1-162-970-11	s	CERAMIC, CHIP 0.01uF 10% 25V
C457	1-162-970-11	s	CERAMIC, CHIP 0.01uF 10% 25V
CN1	1-564-317-11	o	CONNECTOR, BB 5P, MALE
CN2	1-564-317-11	o	CONNECTOR, BB 5P, MALE
IC4	8-759-710-86	s	IC NJM2233BM-T1
L13	1-408-785-21	s	INDUCTOR, CHIP 47UH
L14	1-408-785-21	s	INDUCTOR, CHIP 47UH
L15	1-408-798-00	s	INDUCTOR, CHIP 1mmH
L16	1-410-389-31	s	INDUCTOR, CHIP 47UH
L17	1-410-391-11	s	INDUCTOR, CHIP 68uH
L18	1-410-392-11	s	INDUCTOR, CHIP 82uH
L19	1-410-392-11	s	INDUCTOR, CHIP 82uH
L23	1-408-785-21	s	INDUCTOR, CHIP 47UH
Q26	8-729-120-28	s	TRANSISTOR 2SC1623-L5L6
Q27	8-729-120-28	s	TRANSISTOR 2SC1623-L5L6
Q28	8-729-905-18	s	TRANSISTOR DTC144EU
Q29	8-729-120-28	s	TRANSISTOR 2SC1623-L5L6
Q30	8-729-120-28	s	TRANSISTOR 2SC1623-L5L6
Q31	8-729-120-28	s	TRANSISTOR 2SC1623-L5L6
Q33	8-729-905-23	s	TRANSISTOR 2SA1576-R
Q34	8-729-202-38	s	TRANSISTOR 2SC3326N
Q35	8-729-202-38	s	TRANSISTOR 2SC3326N
Q36	8-729-120-28	s	TRANSISTOR 2SC1623-L5L6
Q37	8-729-120-28	s	TRANSISTOR 2SC1623-L5L6
Q38	8-729-120-28	s	TRANSISTOR 2SC1623-L5L6

(FL-129 BOARD)

Ref. No. or Q'ty	Part No.	SP	Description
Q39	8-729-120-28	s	TRANSISTOR 2SC1623-L5L6
Q40	8-729-120-28	s	TRANSISTOR 2SC1623-L5L6
Q41	8-729-120-28	s	TRANSISTOR 2SC1623-L5L6
Q42	8-729-120-28	s	TRANSISTOR 2SC1623-L5L6
Q43	8-729-905-18	s	TRANSISTOR DTC144EU
Q44	8-729-905-18	s	TRANSISTOR DTC144EU
R56	1-216-833-11	s	METAL, CHIP 10K 5% 1/16W
R57	1-216-821-11	s	METAL, CHIP 1K 5% 1/16W
R58	1-216-821-11	s	METAL, CHIP 1K 5% 1/16W
R59	1-216-823-11	s	METAL, CHIP 1.5K 5% 1/16W
R60	1-218-672-11	s	METAL 150 0.50% 1/16W
R61	1-218-271-11	s	METAL 2K 5% 1/16W
R62	1-216-827-11	s	METAL, CHIP 3.3K 5% 1/16W
R63	1-218-289-11	s	METAL, CHIP 510 5% 1/16W
R64	1-216-865-11	s	METAL, CHIP 3K 5% 1/16W
R65	1-218-289-11	s	METAL, CHIP 510 5% 1/16W
R66	1-216-838-11	s	METAL, CHIP 27K 5% 1/16W
R67	1-216-837-11	s	METAL, CHIP 22K 5% 1/16W
R69	1-218-289-11	s	METAL, CHIP 510 5% 1/16W
R70	1-216-817-11	s	METAL, CHIP 470 5% 1/16W
R71	1-218-289-11	s	METAL, CHIP 510 5% 1/16W
R73	1-216-821-11	s	METAL, CHIP 1K 5% 1/16W
R74	1-218-457-11	s	METAL 910 5% 1/16W
R75	1-218-289-11	s	METAL, CHIP 510 5% 1/16W
R80	1-216-821-11	s	METAL, CHIP 1K 5% 1/16W
R81	1-216-839-11	s	METAL, CHIP 33K 5% 1/16W
R82	1-216-839-11	s	METAL, CHIP 33K 5% 1/16W
R83	1-216-821-11	s	METAL, CHIP 1K 5% 1/16W
R84	1-216-820-11	s	METAL, CHIP 820 5% 1/16W
R85	1-216-827-11	s	METAL, CHIP 3.3K 5% 1/16W
R86	1-216-838-11	s	METAL, CHIP 27K 5% 1/16W
R87	1-216-837-11	s	METAL, CHIP 22K 5% 1/16W
R88	1-216-864-11	s	METAL, CHIP 0 5% 1/16W
R89	1-218-289-11	s	METAL, CHIP 510 5% 1/16W
R90	1-216-817-11	s	METAL, CHIP 470 5% 1/16W
R91	1-216-825-11	s	METAL, CHIP 2.2K 5% 1/16W
R92	1-216-838-11	s	METAL, CHIP 27K 5% 1/16W
R93	1-216-837-11	s	METAL, CHIP 22K 5% 1/16W
R94	1-216-864-11	s	METAL, CHIP 0 5% 1/16W
R95	1-216-817-11	s	METAL, CHIP 470 5% 1/16W
R96	1-216-825-11	s	METAL, CHIP 2.2K 5% 1/16W
R98	1-216-820-11	s	METAL, CHIP 820 5% 1/16W
R99	1-216-809-11	s	METAL, CHIP 100 5% 1/16W
R100	1-216-833-11	s	METAL, CHIP 10K 5% 1/16W
R101	1-216-833-11	s	METAL, CHIP 10K 5% 1/16W
R605	1-218-271-11	s	METAL 2K 5% 1/16W
R701	1-218-688-11	s	METAL, CHIP 680 0.50% 1/16W
R747	1-216-809-11	s	METAL, CHIP 100 5% 1/16W
R788	1-218-457-11	s	METAL, CHIP 910 5% 1/16W
RV2	1-241-261-11	s	RES, ADJ, CERMET 1K
RV3	1-241-261-11	s	RES, ADJ, CERMET 1K
RV4	1-241-262-11	s	RES, ADJ, CERMET 2K
RV5	1-241-262-11	s	RES, ADJ, CERMET 2K

FL-130 BOARD

Ref. No. or Q'ty	Part No.	SP	Description
1pc	A-8276-246-A	s	MOUNTED CIRCUIT BOARD, FL-130
C293	1-162-917-11	s	CERAMIC, CHIP 15PF 5% 50V
C294	1-135-166-21	s	TANTALUM, CHIP 47uF 10% 10V
C296	1-135-166-21	s	TANTALUM, CHIP 47uF 10% 10V
C297	1-162-921-11	s	CERAMIC, CHIP 33PF 5% 50V
C298	1-135-227-11	s	TANTAL 100uF 20% 6.3
C299	1-135-227-11	s	TANTAL 100uF 20% 6.3
C300	1-162-916-11	s	CERAMIC, CHIP 12PF 5% 50V
C303	1-135-165-11	s	TANTALUM 33uF 20% 16V
C304	1-135-165-11	s	TANTALUM 33uF 20% 16V
C305	1-162-970-11	s	CERAMIC, CHIP 0.01uF 10% 25V
C306	1-162-970-11	s	CERAMIC, CHIP 0.01uF 10% 25V
C307	1-135-166-21	s	TANTALUM, CHIP 47uF 10% 10V
C308	1-135-166-21	s	TANTALUM, CHIP 47uF 10% 10V
C453	1-164-385-11	s	CERAMIC 160PF 5% 50V
C454	1-135-166-21	s	TANTALUM, CHIP 47uF 10% 10V
C701	1-135-227-11	s	TANTAL 100uF 20% 6.3
C702	1-135-227-11	s	TANTAL 100uF 20% 6.3
C703	1-162-912-11	s	CERAMIC 7PF 50V
C704	1-164-378-11	s	CERAMIC 30PF 5% 50V
CN7	1-566-095-11	o	CONNECTOR, BB 11P, MALE
CN8	1-566-095-11	o	CONNECTOR, BB 11P, MALE
CT1	1-141-404-11	s	CAP, TRIMMER 30PF
FL4	1-236-716-11	s	FILTER, LOW PASS
IC18	8-759-710-86	s	IC NJM2233BM-T1
L52	1-410-381-11	s	INDUCTOR, CHIP 10UH
L72	1-410-387-11	s	INDUCTOR, CHIP 33uH
L73	1-410-383-31	s	INDUCTOR, CHIP 15uH
L701	1-410-386-11	s	INDUCTOR, CHIP 27uH
Q114	8-729-230-49	s	TRANSISTOR 2SC2712-YG
Q115	8-729-120-28	s	TRANSISTOR 2SC1623-L5L6
Q116	8-729-230-49	s	TRANSISTOR 2SC2712-YG
Q117	8-729-230-49	s	TRANSISTOR 2SC2712-YG
Q118	8-729-120-28	s	TRANSISTOR 2SC1623-L5L6
Q119	8-729-102-07	s	TRANSISTOR 2SC2223-F13
Q120	8-729-905-23	s	TRANSISTOR 2SA1576-R
Q121	8-729-230-49	s	TRANSISTOR 2SC2712-YG
Q701	8-729-905-23	s	TRANSISTOR 2SA1576-R
Q702	8-729-120-28	s	TRANSISTOR 2SC1623-L5L6
Q703	8-729-905-23	s	TRANSISTOR 2SA1576-R
R367	1-216-821-11	s	METAL, CHIP 1K 5% 1/16W
R368	1-218-706-11	s	METAL, CHIP 3.9K 0.50% 1/16W
R369	1-216-821-11	s	METAL, CHIP 1K 5% 1/16W
R370	1-216-833-11	s	METAL, CHIP 10K 5% 1/16W
R371	1-218-285-11	s	METAL, CHIP 75 5% 1/16W
R372	1-216-820-11	s	METAL, CHIP 820 5% 1/16W
R373	1-216-833-11	s	METAL, CHIP 10K 5% 1/16W
R374	1-216-833-11	s	METAL, CHIP 10K 5% 1/16W
R375	1-216-821-11	s	METAL, CHIP 1K 5% 1/16W
R376	1-218-700-11	s	METAL 2.2K 0.50% 1/16W
R377	1-218-295-11	s	METAL, CHIP 4.3K 5% 1/16W
R379	1-216-829-11	s	METAL, CHIP 4.7K 5% 1/16W
R380	1-216-838-11	s	METAL, CHIP 27K 5% 1/16W
R381	1-216-837-11	s	METAL, CHIP 22K 5% 1/16W
R382	1-218-883-11	s	METAL CHIP 33K 0.50 1/16W

(FL-130 BOARD)

Ref. No. or Q'ty	Part No.	SP	Description
R383	1-216-817-11	s	METAL, CHIP 470 5% 1/16W
R384	1-216-817-11	s	METAL, CHIP 470 5% 1/16W
R385	1-218-482-11	s	METAL, CHIP 430 5% 1/16W
R387	1-216-864-11	s	METAL, CHIP 0 5% 1/16W
R388	1-216-821-11	s	METAL, CHIP 1K 5% 1/16W
R389	1-216-825-11	s	METAL, CHIP 2.2K 5% 1/16W
R391	1-216-825-11	s	METAL, CHIP 2.2K 5% 1/16W
R392	1-216-809-11	s	METAL, CHIP 100 5% 1/16W
R590	1-218-727-11	s	METAL, CHIP 30K 0.50% 1/16W
R710	1-216-838-11	s	METAL, CHIP 27K 5% 1/16W
R711	1-216-809-11	s	METAL, CHIP 100 5% 1/16W
R712	1-216-825-11	s	METAL, CHIP 2.2K 5% 1/16W
R713	1-216-817-11	s	METAL, CHIP 470 5% 1/16W
R714	1-218-883-11	s	METAL CHIP 33K 0.50 1/16W
R715	1-216-817-11	s	METAL, CHIP 470 5% 1/16W
R716	1-218-482-11	s	METAL, CHIP 430 5% 1/16W
R718	1-216-825-11	s	METAL, CHIP 2.2K 5% 1/16W
R749	1-216-809-11	s	METAL, CHIP 100 5% 1/16W

FL-131 BOARD

Ref. No. or Q'ty	Part No.	SP	Description
1pc	A-8276-247-A	o	MOUNTED CIRCUIT BOARD, FL-131
C314	1-135-166-21	s	TANTALUM, CHIP 47uF 10% 10V
C316	1-162-924-11	s	CERAMIC 56PF 5% 50V
C321	1-162-970-11	s	CERAMIC, CHIP 0.01uF 10% 25V
C322	1-162-970-11	s	CERAMIC, CHIP 0.01uF 10% 25V
C323	1-135-166-21	s	TANTALUM, CHIP 47uF 10% 10V
C324	1-135-166-21	s	TANTALUM, CHIP 47uF 10% 10V
C724	1-135-227-11	s	TANTAL 100uF 20% 6.3
C725	1-135-227-11	s	TANTAL 100uF 20% 6.3
C727	1-162-919-11	s	CERAMIC, CHIP 22PF 5% 50V
CN9	1-566-095-11	o	CONNECTOR, BB 11P, MALE
CN10	1-566-095-11	o	CONNECTOR, BB 11P, MALE
CT2	1-141-404-11	s	CAP, TRIMMER 30PF
L53	1-410-381-11	s	INDUCTOR, CHIP 10UH
L709	1-410-385-11	s	INDUCTOR, CHIP 22uH
Q123	8-729-230-49	s	TRANSISTOR 2SC2712-YG
Q124	8-729-120-28	s	TRANSISTOR 2SC1623-L5L6
Q125	8-729-230-49	s	TRANSISTOR 2SC2712-YG
Q126	8-729-230-49	s	TRANSISTOR 2SC2712-YG
Q127	8-729-102-07	s	TRANSISTOR 2SC2223-F13
Q130	8-729-905-23	s	TRANSISTOR 2SA1576-R
Q708	8-729-905-23	s	TRANSISTOR 2SA1576-R
Q709	8-729-120-28	s	TRANSISTOR 2SC1623-L5L6
R399	1-216-833-11	s	METAL, CHIP 10K 5% 1/16W
R400	1-218-285-11	s	METAL, CHIP 75 5% 1/16W
R401	1-216-820-11	s	METAL, CHIP 820 5% 1/16W
R402	1-216-833-11	s	METAL, CHIP 10K 5% 1/16W
R403	1-216-833-11	s	METAL, CHIP 10K 5% 1/16W
R404	1-216-821-11	s	METAL, CHIP 1K 5% 1/16W
R405	1-218-700-11	s	METAL 2.2K 0.50% 1/16W
R406	1-218-704-11	s	METAL, CHIP 3.3K 0.50% 1/16W
R408	1-216-829-11	s	METAL, CHIP 4.7K 5% 1/16W
R409	1-216-838-11	s	METAL, CHIP 27K 5% 1/16W
R410	1-216-837-11	s	METAL, CHIP 22K 5% 1/16W
R412	1-216-821-11	s	METAL, CHIP 1K 5% 1/16W
R413	1-216-821-11	s	METAL, CHIP 1K 5% 1/16W
R421	1-216-809-11	s	METAL, CHIP 100 5% 1/16W
R422	1-216-825-11	s	METAL, CHIP 2.2K 5% 1/16W
R601	1-216-838-11	s	METAL, CHIP 27K 5% 1/16W
R750	1-216-825-11	s	METAL, CHIP 2.2K 5% 1/16W
R751	1-216-817-11	s	METAL, CHIP 470 5% 1/16W
R752	1-218-724-11	s	METAL 22K 0.50% 1/16W
R753	1-216-817-11	s	METAL, CHIP 470 5% 1/16W
R754	1-218-482-11	s	METAL, CHIP 430 5% 1/16W
RV15	1-241-262-11	s	RES, ADJ, CERMET 2K

FP-84 BOARD

Ref. No. or Q'ty	Part No.	SP	Description
1pc	A-7070-624-A	o	MOUNTED CIRCUIT BOARD, FP-84
W801	1-562-880-11	s	CONNECTOR, 15P, FEMALE

FP-122 BOARD

Ref. No. or Q'ty	Part No.	SP	Description
1pc	A-7070-625-A	o	MOUNTED CIRCUIT BOARD, FP-122
W901	1-562-880-11	s	CONNECTOR, 15P, FEMALE

HP-52 BOARD

Ref. No. or Q'ty	Part No.	SP	Description
1pc	1-642-875-12	o	PRINTED CIRCUIT BOARD, HP-52
C1	1-162-970-11	s	CERAMIC, CHIP 0.01uF 10% 25V
J1002	1-507-854-00	s	JACK, PHONE

KY-217 BOARD

Ref. No. or Q'ty	Part No.	SP	Description
1pc	A-8271-230-A	o	MOUNTED CIRCUIT BOARD, KY-217
1pc	3-718-657-01	o	HOLDER, LED
BT1	1-528-229-11	o	BATTERY, LITHIUM CR-2450
C2	1-163-104-00	s	CERAMIC, CHIP 30PF 5% 50V
C3	1-163-104-00	s	CERAMIC, CHIP 30PF 5% 50V
C4	1-163-035-00	s	CERAMIC, CHIP 0.047uF 50V
C6	1-126-176-11	s	ELECT 220uF 20% 10V
C7	1-163-035-00	s	CERAMIC, CHIP 0.047uF 50V
C8	1-125-513-11	s	DOUBLE LAYERS 0.047FARAD 5.5V
C9	1-126-163-11	s	ELECT 4.7uF 20% 50V
C10	1-164-232-11	s	CERAMIC 0.01uF 10% 100V
C11	1-163-035-00	s	CERAMIC, CHIP 0.047uF 50V
C12	1-163-104-00	s	CERAMIC, CHIP 30PF 5% 50V
C13	1-163-104-00	s	CERAMIC, CHIP 30PF 5% 50V
C14	1-163-035-00	s	CERAMIC, CHIP 0.047uF 50V
C15	1-124-472-11	s	ELECT 470uF 20% 10V
C16	1-163-035-00	s	CERAMIC, CHIP 0.047uF 50V
C17	1-126-163-11	s	ELECT 4.7uF 20% 50V
C18	1-163-275-11	s	CERAMIC, CHIP 0.001uF 5% 50V
C19	1-163-035-00	s	CERAMIC, CHIP 0.047uF 50V
CN701	1-506-487-11	s	CONNECTOR 8P, MALE
CN702	1-506-471-11	s	CONNECTOR 6P, MALE
CN703	1-506-491-11	o	CONNECTOR 12P, MALE
CN704	1-506-489-11	o	CONNECTOR 10P, MALE
CN706	1-506-486-11	s	CONNECTOR 7P, MALE
COP1	1-566-388-11	s	CONNECTOR 8P, MALE
COR1	1-563-859-11	s	PLUG, SHORTING
D1	8-719-104-34	s	DIODE 1S2835
D9	8-719-104-34	s	DIODE 1S2835
D10	8-719-104-34	s	DIODE 1S2835
D11	8-719-104-34	s	DIODE 1S2835
D13	8-719-104-34	s	DIODE 1S2835
D14	8-719-104-34	s	DIODE 1S2835
D15	8-719-104-34	s	DIODE 1S2835
D17	8-719-104-34	s	DIODE 1S2835
D19	8-719-104-34	s	DIODE 1S2835
D23	8-719-104-34	s	DIODE 1S2835
D24	8-719-104-34	s	DIODE 1S2835
D25	8-719-104-34	s	DIODE 1S2835
D26	8-719-104-34	s	DIODE 1S2835
D29	8-719-104-34	s	DIODE 1S2835
D30	8-719-104-34	s	DIODE 1S2835
D45	8-719-104-34	s	DIODE 1S2835
D48	8-719-200-02	s	DIODE 10E2
D49	8-719-800-76	s	DIODE 1SS226
D51	8-719-800-76	s	DIODE 1SS226
D52	8-719-800-76	s	DIODE 1SS226
D54	8-719-800-76	s	DIODE 1SS226
D101	8-719-939-39	s	LED GL5HD8, RED
D102	8-719-802-11	s	LED TLUG154, GRN
D103	8-719-939-39	s	LED GL5HD8, RED
D104	8-719-939-39	s	LED GL5HD8, RED
D105	8-719-939-39	s	LED GL5HD8, RED
D106	8-719-939-39	s	LED GL5HD8, RED
D107	8-719-939-39	s	LED GL5HD8, RED
D108	8-719-939-39	s	LED GL5HD8, RED

(KY-217 BOARD)

Ref. No. or Q'ty	Part No.	SP	Description
D109	8-719-939-39	s	LED GL5HD8, RED
D110	8-719-939-39	s	LED GL5HD8, RED
D111	8-719-939-39	s	LED GL5HD8, RED
D112	8-719-939-39	s	LED GL5HD8, RED
D113	8-719-939-39	s	LED GL5HD8, RED
D114	8-719-820-28	s	LED TLG-256, GRN
D115	8-719-820-28	s	LED TLG-256, GRN
D116	8-719-939-39	s	LED GL5HD8, RED
D117	8-719-802-11	s	LED TLUG154, GRN
D118	8-719-939-39	s	LED GL5HD8, RED
IC1	8-759-072-57	s	IC M50747H-601FP
IC4	8-759-093-15	s	IC TDA62104F
IC6	8-759-982-21	s	IC RC78L05A
IC7	8-759-074-77	s	IC MB88201HPF-539N
L1	1-410-385-11	s	INDUCTOR, CHIP 22uH
Q2	8-729-901-07	s	TRANSISTOR DTA124XK
Q3	8-729-901-07	s	TRANSISTOR DTA124XK
Q4	8-729-901-07	s	TRANSISTOR DTA124XK
Q5	8-729-120-28	s	TRANSISTOR 2SC1623-L5L6
Q6	8-729-120-28	s	TRANSISTOR 2SC1623-L5L6
Q7	8-729-901-07	s	TRANSISTOR DTA124XK
Q15	8-729-901-01	s	TRANSISTOR DTC144EK
Q100	8-729-120-28	s	TRANSISTOR 2SC1623-L5L6
Q101	8-729-216-22	s	TRANSISTOR 2SA1162
Q102	8-729-120-28	s	TRANSISTOR 2SC1623-L5L6
Q103	8-729-216-22	s	TRANSISTOR 2SA1162
Q104	8-729-120-28	s	TRANSISTOR 2SC1623-L5L6
Q105	8-729-216-22	s	TRANSISTOR 2SA1162
Q106	8-729-120-28	s	TRANSISTOR 2SC1623-L5L6
Q107	8-729-216-22	s	TRANSISTOR 2SA1162
Q108	8-729-120-28	s	TRANSISTOR 2SC1623-L5L6
Q109	8-729-216-22	s	TRANSISTOR 2SA1162
Q110	8-729-120-28	s	TRANSISTOR 2SC1623-L5L6
Q111	8-729-216-22	s	TRANSISTOR 2SA1162
Q112	8-729-120-28	s	TRANSISTOR 2SC1623-L5L6
Q113	8-729-216-22	s	TRANSISTOR 2SA1162
Q114	8-729-120-28	s	TRANSISTOR 2SC1623-L5L6
Q115	8-729-216-22	s	TRANSISTOR 2SA1162
Q116	8-729-120-28	s	TRANSISTOR 2SC1623-L5L6
Q117	8-729-216-22	s	TRANSISTOR 2SA1162
Q118	8-729-120-28	s	TRANSISTOR 2SC1623-L5L6
Q119	8-729-216-22	s	TRANSISTOR 2SA1162
Q120	8-729-120-28	s	TRANSISTOR 2SC1623-L5L6
Q121	8-729-216-22	s	TRANSISTOR 2SA1162
Q122	8-729-120-28	s	TRANSISTOR 2SC1623-L5L6
Q123	8-729-216-22	s	TRANSISTOR 2SA1162
Q124	8-729-120-28	s	TRANSISTOR 2SC1623-L5L6
R8	1-216-049-00	s	METAL, CHIP 1K 5% 1/10W
R9	1-216-049-00	s	METAL, CHIP 1K 5% 1/10W
R10	1-216-049-00	s	METAL, CHIP 1K 5% 1/10W
R11	1-216-049-00	s	METAL, CHIP 1K 5% 1/10W
R12	1-216-049-00	s	METAL, CHIP 1K 5% 1/10W
R13	1-216-049-00	s	METAL, CHIP 1K 5% 1/10W
R14	1-216-049-00	s	METAL, CHIP 1K 5% 1/10W
R15	1-216-049-00	s	METAL, CHIP 1K 5% 1/10W
R16	1-216-689-11	s	METAL, CHIP 39K 0.5% 1/10W
R17	1-216-689-11	s	METAL, CHIP 39K 0.5% 1/10W

(KY-217 BOARD)

Ref. No. or Q'ty	Part No.	SP	Description
R18	1-216-689-11	s	METAL, CHIP 39K 0.5% 1/10W
R19	1-216-689-11	s	METAL, CHIP 39K 0.5% 1/10W
R20	1-216-689-11	s	METAL, CHIP 39K 0.5% 1/10W
R21	1-216-689-11	s	METAL, CHIP 39K 0.5% 1/10W
R22	1-216-689-11	s	METAL, CHIP 39K 0.5% 1/10W
R23	1-216-689-11	s	METAL, CHIP 39K 0.5% 1/10W
R24	1-216-023-00	s	METAL, CHIP 82 5% 1/10W
R25	1-216-023-00	s	METAL, CHIP 82 5% 1/10W
R26	1-216-023-00	s	METAL, CHIP 82 5% 1/10W
R27	1-216-023-00	s	METAL, CHIP 82 5% 1/10W
R28	1-216-023-00	s	METAL, CHIP 82 5% 1/10W
R29	1-216-023-00	s	METAL, CHIP 82 5% 1/10W
R30	1-216-023-00	s	METAL, CHIP 82 5% 1/10W
R31	1-216-023-00	s	METAL, CHIP 82 5% 1/10W
R32	1-216-121-00	s	METAL, CHIP 1M 5% 1/10W
R33	1-216-059-00	s	METAL, CHIP 2.7K 5% 1/10W
R34	1-216-081-00	s	METAL, CHIP 22K 5% 1/10W
R35	1-216-081-00	s	METAL, CHIP 22K 5% 1/10W
R36	1-216-065-00	s	METAL, CHIP 4.7K 5% 1/10W
R37	1-216-059-00	s	METAL, CHIP 2.7K 5% 1/10W
R38	1-216-073-00	s	METAL, CHIP 10K 5% 1/10W
R39	1-216-089-00	s	METAL, CHIP 47K 5% 1/10W
R40	1-216-089-00	s	METAL, CHIP 47K 5% 1/10W
R41	1-216-073-00	s	METAL, CHIP 10K 5% 1/10W
R44	1-216-041-00	s	METAL, CHIP 470 5% 1/10W
R45	1-216-057-00	s	METAL, CHIP 2.2K 5% 1/10W
R48	1-216-089-00	s	METAL, CHIP 47K 5% 1/10W
R49	1-216-073-00	s	METAL, CHIP 10K 5% 1/10W
R50	1-216-049-00	s	METAL, CHIP 1K 5% 1/10W
R51	1-216-049-00	s	METAL, CHIP 1K 5% 1/10W
R52	1-216-049-00	s	METAL, CHIP 1K 5% 1/10W
R53	1-216-049-00	s	METAL, CHIP 1K 5% 1/10W
R54	1-216-073-00	s	METAL, CHIP 10K 5% 1/10W
R55	1-216-073-00	s	METAL, CHIP 10K 5% 1/10W
R56	1-216-073-00	s	METAL, CHIP 10K 5% 1/10W
R57	1-216-073-00	s	METAL, CHIP 10K 5% 1/10W
R58	1-216-061-00	s	METAL, CHIP 3.3K 5% 1/10W
R73	1-216-073-00	s	METAL, CHIP 10K 5% 1/10W
R75	1-216-081-00	s	METAL, CHIP 22K 5% 1/10W
R84	1-216-073-00	s	METAL, CHIP 10K 5% 1/10W
R85	1-216-073-00	s	METAL, CHIP 10K 5% 1/10W
R86	1-216-049-00	s	METAL, CHIP 1K 5% 1/10W
R87	1-216-073-00	s	METAL, CHIP 10K 5% 1/10W
R88	1-216-061-00	s	METAL, CHIP 3.3K 5% 1/10W
R89	1-216-073-00	s	METAL, CHIP 10K 5% 1/10W
R95	1-216-023-00	s	METAL, CHIP 82 5% 1/10W
R96	1-216-073-00	s	METAL, CHIP 10K 5% 1/10W
R97	1-216-089-00	s	METAL, CHIP 47K 5% 1/10W
R98	1-216-017-00	s	METAL, CHIP 47 5% 1/10W
R99	1-216-017-00	s	METAL, CHIP 47 5% 1/10W
R100	1-216-077-00	s	METAL, CHIP 15K 5% 1/10W
R101	1-216-073-00	s	METAL, CHIP 10K 5% 1/10W
R102	1-216-063-00	s	METAL, CHIP 3.9K 5% 1/10W
R103	1-216-077-00	s	METAL, CHIP 15K 5% 1/10W
R104	1-216-073-00	s	METAL, CHIP 10K 5% 1/10W
R105	1-216-063-00	s	METAL, CHIP 3.9K 5% 1/10W
R106	1-216-077-00	s	METAL, CHIP 15K 5% 1/10W
R107	1-216-073-00	s	METAL, CHIP 10K 5% 1/10W
R108	1-216-063-00	s	METAL, CHIP 3.9K 5% 1/10W

(KY-217 BOARD)

Ref. No. or Q'ty	Part No.	SP	Description
R109	1-216-077-00	s	METAL, CHIP 15K 5% 1/10W
R110	1-216-073-00	s	METAL, CHIP 10K 5% 1/10W
R111	1-216-063-00	s	METAL, CHIP 3.9K 5% 1/10W
R112	1-216-077-00	s	METAL, CHIP 15K 5% 1/10W
R113	1-216-073-00	s	METAL, CHIP 10K 5% 1/10W
R114	1-216-063-00	s	METAL, CHIP 3.9K 5% 1/10W
R115	1-216-077-00	s	METAL, CHIP 15K 5% 1/10W
R116	1-216-073-00	s	METAL, CHIP 10K 5% 1/10W
R117	1-216-063-00	s	METAL, CHIP 3.9K 5% 1/10W
R118	1-216-077-00	s	METAL, CHIP 15K 5% 1/10W
R119	1-216-073-00	s	METAL, CHIP 10K 5% 1/10W
R120	1-216-063-00	s	METAL, CHIP 3.9K 5% 1/10W
R121	1-216-077-00	s	METAL, CHIP 15K 5% 1/10W
R122	1-216-073-00	s	METAL, CHIP 10K 5% 1/10W
R123	1-216-063-00	s	METAL, CHIP 3.9K 5% 1/10W
R124	1-216-077-00	s	METAL, CHIP 15K 5% 1/10W
R125	1-216-073-00	s	METAL, CHIP 10K 5% 1/10W
R126	1-216-063-00	s	METAL, CHIP 3.9K 5% 1/10W
R127	1-216-077-00	s	METAL, CHIP 15K 5% 1/10W
R128	1-216-073-00	s	METAL, CHIP 10K 5% 1/10W
R129	1-216-063-00	s	METAL, CHIP 3.9K 5% 1/10W
R130	1-216-077-00	s	METAL, CHIP 15K 5% 1/10W
R131	1-216-073-00	s	METAL, CHIP 10K 5% 1/10W
R132	1-216-063-00	s	METAL, CHIP 3.9K 5% 1/10W
R133	1-216-077-00	s	METAL, CHIP 15K 5% 1/10W
R134	1-216-073-00	s	METAL, CHIP 10K 5% 1/10W
R135	1-216-063-00	s	METAL, CHIP 3.9K 5% 1/10W
R201	1-216-073-00	s	METAL, CHIP 10K 5% 1/10W
R202	1-216-073-00	s	METAL, CHIP 10K 5% 1/10W
R203	1-216-073-00	s	METAL, CHIP 10K 5% 1/10W
R204	1-216-073-00	s	METAL, CHIP 10K 5% 1/10W
R205	1-216-073-00	s	METAL, CHIP 10K 5% 1/10W
R206	1-216-073-00	s	METAL, CHIP 10K 5% 1/10W
R211	1-216-073-00	s	METAL, CHIP 10K 5% 1/10W
R212	1-216-073-00	s	METAL, CHIP 10K 5% 1/10W
R213	1-216-073-00	s	METAL, CHIP 10K 5% 1/10W
R214	1-216-073-00	s	METAL, CHIP 10K 5% 1/10W
R215	1-216-073-00	s	METAL, CHIP 10K 5% 1/10W
R216	1-216-073-00	s	METAL, CHIP 10K 5% 1/10W
R217	1-216-073-00	s	METAL, CHIP 10K 5% 1/10W
R218	1-216-073-00	s	METAL, CHIP 10K 5% 1/10W
R219	1-216-053-00	s	METAL, CHIP 1.5K 5% 1/10W
R220	1-216-081-00	s	METAL, CHIP 22K 5% 1/10W
R221	1-216-017-00	s	METAL, CHIP 47 5% 1/10W
R222	1-216-017-00	s	METAL, CHIP 47 5% 1/10W
S1	1-552-539-00	s	SWITCH, PUSH
S9	1-552-539-00	s	SWITCH, PUSH
S10	1-552-539-00	s	SWITCH, PUSH
S11	1-552-539-00	s	SWITCH, PUSH
S12	1-552-539-00	s	SWITCH, PUSH
S13	1-552-539-00	s	SWITCH, PUSH
S14	1-552-539-00	s	SWITCH, PUSH
S15	1-552-539-00	s	SWITCH, PUSH
S16	1-552-539-00	s	SWITCH, PUSH
S17	1-552-539-00	s	SWITCH, PUSH
S18	1-552-539-00	s	SWITCH, PUSH
S19	1-552-539-00	s	SWITCH, PUSH
S23	1-552-539-00	s	SWITCH, PUSH
S24	1-552-539-00	s	SWITCH, PUSH

(KY-217 BOARD)

Ref. No. or Q'ty	Part No.	SP	Description
S25	1-552-539-00	s	SWITCH, PUSH
S26	1-552-539-00	s	SWITCH, PUSH
S27	1-552-539-00	s	SWITCH, PUSH
S29	1-552-539-00	s	SWITCH, PUSH
S30	1-552-539-00	s	SWITCH, PUSH
X1	1-567-869-11	s	RESONATOR, CERAMIC 9.83MHz
X2	1-567-192-11	s	RESONATOR, CERAMIC 4.00MHz

LD-1 BOARD

Ref. No. or Q'ty	Part No.	SP	Description
1pc	A-7070-024-A	o	MOUNTED CIRCUIT BOARD, LD-1
D901	8-719-928-54	s	DIODE GL-450S

LM-22 BOARD

Ref. No. or Q'ty	Part No.	SP	Description
1pc	X-3166-289-A	s	L-SW ASSY
1pc	1-564-671-11	o	CONNECTOR 6P, MALE

LP-52 BOARD

Ref. No. or Q'ty	Part No.	SP	Description
1pc	A-7061-770-A	o	MOUNTED CIRCUIT BOARD, LP-52
CN766	1-506-486-11	s	CONNECTOR 7P, MALE
D1	8-719-901-65	s	LED LT-9200H, YELLOW
D2	8-719-820-72	s	LED TLUY144, YELLOW
D3	8-719-901-65	s	LED LT-9200H, YELLOW
D4	8-719-820-73	s	LED TLUG144 ,GREEN
D5	8-719-901-66	s	DIODE LT-9200N, YELLOWSH GREEN
D6	8-719-820-72	s	LED TLUY144, YELLOW
D7	8-719-901-66	s	DIODE LT-9200N, YELLOWSH GREEN
R1	1-249-404-00	s	CARBON 82 5% 1/4W
R2	1-249-404-00	s	CARBON 82 5% 1/4W
R3	1-249-403-11	s	CARBON 68 5% 1/4W
R4	1-249-404-00	s	CARBON 82 5% 1/4W
R5	1-249-404-00	s	CARBON 82 5% 1/4W
R6	1-249-403-11	s	CARBON 68 5% 1/4W
R7	1-249-404-00	s	CARBON 82 5% 1/4W
R8	1-249-404-00	s	CARBON 82 5% 1/4W
R9	1-249-404-00	s	CARBON 82 5% 1/4W
R10	1-249-404-00	s	CARBON 82 5% 1/4W

M BOARD

Ref. No. or Q'ty	Part No.	SP	Description
1pc	⚠1-413-731-11	s	SWITCHING REGURATOR (SOPS-1030)
1pc	1-543-060-00	s	BEAD, FERRITE
1pc	1-543-923-11	s	BEAD, FERRITE
1pc	1-643-066-11	s	PC BOARD, SOPS-1030M
1pc	1-705-308-11	s	PC BOARD, SOPS-1030M COMBINED
1pc	2-626-077-01	o	TUBE
1pc	4-382-854-11	s	SCREW (M3X10), P, SW (+)
C101	1-136-346-11	s	FILM 0.22uF 20% 125
C102	1-161-742-00	s	CERAMIC 0.0022uF 20% 400V
C103	1-161-742-00	s	CERAMIC 0.0022uF 20% 400V
C104	1-136-345-21	s	FILM 0.1uF 20% 300
C105	1-161-742-00	s	CERAMIC 0.0022uF 20% 400V
C106	1-125-738-11	s	ELECT 270uF 20% 250
C107	1-125-738-11	s	ELECT 270uF 20% 250
C108	1-136-205-11	s	FILM 0.022uF 5% 630
C109	1-124-122-11	s	ELECT 100uF 20% 50V
C110	1-124-907-11	s	ELECT 10uF 20% 50V
C111	1-136-165-00	s	FILM 0.1uF 5% 50V
C112	1-110-342-11	s	FILM 390PF 5% 50V
C113	1-130-487-00	s	MYLAR 0.022uF 5% 50V
C117	1-162-573-11	s	CERAMIC 100PF 10% 400
C118	1-130-487-00	s	MYLAR 0.022uF 5% 50V
C201	1-101-821-00	s	CERAMIC 2200PF 500V
C202	1-101-821-00	s	CERAMIC 2200PF 500V
C203	1-130-487-00	s	MYLAR 0.022uF 5% 50V
C207	1-136-165-00	s	FILM 0.1uF 5% 50V
C209	1-124-925-11	s	ELECT 2.2uF 20% 100V
C210	1-124-567-00	s	ELECT 1200uF 20% 10V
C213	1-126-241-11	s	ELECT 1500uF 20% 16V
C214	1-126-241-11	s	ELECT 1500uF 20% 16V
C215	1-128-102-11	s	ELECT 1200uF 20% 16V
C216	1-136-165-00	s	FILM 0.1uF 5% 50V
C217	1-128-102-11	s	ELECT 1200uF 20% 16V
C219	1-124-527-11	s	ELECT 8200uF 20% 6.3V
C220	1-124-527-11	s	ELECT 8200uF 20% 6.3V
C222	1-128-101-11	s	ELECT 2200uF 20% 6.3
C223	1-136-165-00	s	FILM 0.1uF 5% 50V
C225	1-124-604-00	s	ELECT 330uF 20% 10V
C226	1-136-165-00	s	FILM 0.1uF 5% 50V
C227	1-128-102-11	s	ELECT 1200uF 20% 16V
C228	1-126-316-51	s	ELECT 470uF 20% 16V
C229	1-136-165-00	s	FILM 0.1uF 5% 50V
C231	1-130-487-00	s	MYLAR 0.022uF 5% 50V
C232	1-130-483-00	s	MYLAR 0.01uF 5% 50V
C233	1-124-477-11	s	ELECT 47uF 20% 25V
CN101	1-565-395-11	s	PIN, CONNECTOR 3P
CN201	1-564-210-00	o	CONNECTOR, IL-S 12P, MALE
CN202	1-564-706-11	o	PIN, CONNECTOR 4P
D101	8-719-510-22	s	DIODE D3SB60
D102	8-719-313-16	s	DIODE AU02A
D103	8-719-313-16	s	DIODE AU02A
D104	8-719-911-19	s	DIODE 1SS119
D105	8-719-109-84	s	DIODE RD5.1ES-B1
D105	8-719-109-85	s	DIODE RD5.1ES-B2
D201	8-719-510-41	s	DIODE D10SC9M
D202	8-719-510-39	s	DIODE D10LC20U
D203	8-719-510-12	s	DIODE D10SC4M
D205	8-719-510-73	s	DIODE S3L20UF4

(M BOARD)

Ref. No. or Q'ty	Part No.	SP	Description
D206	8-719-510-73	s	DIODE S3L20UF4
D207	8-719-911-19	s	DIODE 1SS119
D208	8-719-313-16	s	DIODE AU02A
D209	8-719-911-19	s	DIODE 1SS119
D209	8-719-912-20	s	DIODE 1SS120
D210	8-719-110-31	s	DIODE RD12ESB2
D211	8-719-123-54	s	DIODE RD5.6ES
IC102	8-719-801-22	s	IC TLP621
IC103	8-719-801-22	s	IC TLP621
IC201	8-759-245-79	s	IC M5F7905L
IC202	8-759-604-43	s	IC M5F79M09L
IC203	8-759-908-15	s	IC TL431CLP
IC204	8-759-605-16	s	IC M51953BL
L101	1-424-637-11	s	TRANSFORMER, LINE FILTER
L201	1-424-255-41	s	COIL, CHOKE (MOLDE) 10UH
L202	1-424-255-41	s	COIL, CHOKE (MOLDE) 10UH
L203	1-424-255-41	s	COIL, CHOKE (MOLDE) 10UH
L204	1-424-255-41	s	COIL, CHOKE (MOLDE) 10UH
Q101	8-729-322-18	s	TRANSISTOR 2SK1402A
Q201	8-729-900-80	s	TRANSISTOR DTC114ES
R101	1-202-849-00	s	SOLID 820K 10% 1/2W
R102	1-243-011-11	s	WIREWOUND 2.2 5% 5W
R103	1-243-011-11	s	WIREWOUND 2.2 5% 5W
R104	1-215-903-11	s	METAL 68K 5% 2W
R105	1-215-903-11	s	METAL 68K 5% 2W
R108	1-215-904-11	s	METAL 100K 5% 2W
R109	1-215-904-11	s	METAL 100K 5% 2W
R110	1-215-902-11	s	METAL 47K 5% 2W
R111	1-215-902-11	s	METAL 47K 5% 2W
R112	1-212-857-00	s	FUSIBLE 10 5% 1/4W
R113	1-249-404-00	s	CARBON 82 5% 1/4W
R114	1-249-441-11	s	CARBON 100K 5% 1/4W
R115	1-249-397-11	s	CARBON 22 5% 1/4W
R116	1-216-341-11	s	METAL 0.22 5% 1W
R117	1-249-405-11	s	CARBON 100 5% 1/4W
R118	1-247-903-00	s	CARBON 1M 5% 1/4W
R119	1-249-417-11	s	CARBON 1K 5% 1/4W
R120	1-249-403-11	s	CARBON 68 5% 1/4W
R121	1-249-425-11	s	CARBON 4.7K 5% 1/4W
R201	1-215-882-00	s	METAL 22 5% 2W
R202	1-249-417-11	s	CARBON 1K 5% 1/4W
R204	1-215-453-00	s	METAL 22K 1% 1/6W
R205	1-215-888-00	s	FILM 220 5% 2W
R206	1-249-435-11	s	CARBON 33K 5% 1/4W
R209	1-249-425-11	s	CARBON 4.7K 5% 1/4W
R211	1-249-431-11	s	CARBON 15K 5% 1/4W
R212	1-215-427-00	s	METAL 1.8K 1% 1/6W
R213	1-249-433-11	s	CARBON 22K 5% 1/4W
R214	1-249-417-11	s	CARBON 1K 5% 1/4W
R215	1-249-417-11	s	CARBON 1K 5% 1/4W
R216	1-249-421-11	s	CARBON 2.2K 5% 1/4W
R217	1-215-888-00	s	FILM 220 5% 2W
R218	1-249-381-11	s	CARBON 1 5% 1/4W
RV201	1-237-500-21	s	RES, ADJ METAL 1K
RV202	1-237-503-21	s	RES, ADJ METAL 10K
T101	1-450-841-11	s	TRANSFORMER, CONVERTER

MB-356 BOARD

Ref. No. or Q'ty	Part No.	SP	Description
1pc	A-8276-261-A	o	MOUNTED CIRCUIT BOARD, MB-356
12pcs	7-621-775-60	s	SCREW +B 26X12
CN113	1-506-478-11	s	CONNECTOR, 13P, MALE
CN114	1-506-468-11	s	CONNECTOR, 3P, MALE
CN115	1-506-477-11	s	CONNECTOR, 12P, MALE
CN117	1-506-475-11	s	CONNECTOR, 10P, MALE
CN118	1-506-474-11	s	CONNECTOR, 9P, MALE
CN119	1-506-482-11	s	CONNECTOR, 3P, MALE
CN121	1-506-491-11	s	CONNECTOR, 12P, MALE
CN122	1-506-482-11	s	CONNECTOR, 3P, MALE
CN123	1-506-483-21	s	CONNECTOR, 4P, MALE
CN124	1-506-492-11	o	CONNECTOR, 13P, MALE
CN125	1-506-482-11	s	CONNECTOR, 3P, MALE
CN126	1-564-722-11	o	CONNECTOR, 6P, MALE
CN127	1-564-724-11	o	CONNECTOR, 8P, MALE
CN128	1-564-877-21	s	CONNECTOR, 15P, MALE
CN129	1-506-494-11	s	CONNECTOR, 15P, MALE
CN130	1-506-484-11	s	CONNECTOR, 5P, MALE
CN131	1-563-863-21	o	CONNECTOR, 26P, MALE
CN132	1-563-863-21	o	CONNECTOR, 26P, MALE
CN133	1-563-863-21	o	CONNECTOR, 26P, MALE
CN134	1-563-863-21	o	CONNECTOR, 26P, MALE
CN135	1-563-863-21	o	CONNECTOR, 26P, MALE
CN136	1-506-492-11	o	CONNECTOR, 13P, MALE
CN137	1-506-489-11	s	CONNECTOR, 10P, MALE
CN601	1-573-784-11	o	CONNECTOR, PHEC 60P, FEMALE
CN602	1-573-784-11	o	CONNECTOR, PHEC 60P, FEMALE
CN603	1-573-784-11	o	CONNECTOR, PHEC 60P, FEMALE
CN604	1-573-784-11	o	CONNECTOR, PHEC 60P, FEMALE
CN605	1-573-784-11	o	CONNECTOR, PHEC 60P, FEMALE
CN606	1-573-784-11	o	CONNECTOR, PHEC 60P, FEMALE
CN607	1-573-784-11	o	CONNECTOR, PHEC 60P, FEMALE
CN608	1-573-784-11	o	CONNECTOR, PHEC 60P, FEMALE
CN609	1-573-784-11	o	CONNECTOR, PHEC 60P, FEMALE
CN610	1-573-784-11	o	CONNECTOR, PHEC 60P, FEMALE
CN611	1-573-784-11	o	CONNECTOR, PHEC 60P, FEMALE
CN612	1-573-784-11	o	CONNECTOR, PHEC 60P, FEMALE
PS1	⚠1-532-679-00	s	LINK, IC 0.6A
PS2	⚠1-532-727-11	s	LINK, IC 0.25A

MD-81 BOARD : S/N 10031-10340

Ref. No. or Q'ty	Part No.	SP	Description
1pc	A-8271-225-A	o	MOUNTED CIRCUIT BOARD, MD-81
2pcs	2-251-622-11	s	LEVER, PC BOARD
C1	1-126-103-11	s	ELECT 470uF 20% 16V
C2	1-128-057-11	s	ELECT 330uF 20% 6.3V
C3	1-162-970-11	s	CERAMIC, CHIP 0.01uF 10% 25V
C4	1-162-970-11	s	CERAMIC, CHIP 0.01uF 10% 25V
C7	1-162-970-11	s	CERAMIC, CHIP 0.01uF 10% 25V
C8	1-124-126-00	s	ELECT 47uF 20% 25V
C9	1-162-923-11	s	CERAMIC, CHIP 47PF 5% 50V
C10	1-162-923-11	s	CERAMIC, CHIP 47PF 5% 50V
C11	1-128-057-11	s	ELECT 330uF 20% 6.3V
C12	1-128-057-11	s	ELECT 330uF 20% 6.3V
C13	1-162-970-11	s	CERAMIC, CHIP 0.01uF 10% 25V
C14	1-162-970-11	s	CERAMIC, CHIP 0.01uF 10% 25V
C15	1-124-126-00	s	ELECT 47uF 20% 25V
C18	1-162-917-11	s	CERAMIC, CHIP 15PF 5% 50V
C19	1-124-126-00	s	ELECT 47uF 20% 25V
C22	1-124-126-00	s	ELECT 47uF 20% 25V
C25	1-124-126-00	s	ELECT 47uF 20% 25V
C26	1-124-126-00	s	ELECT 47uF 20% 25V
C27	1-124-126-00	s	ELECT 47uF 20% 25V
C29	1-124-126-00	s	ELECT 47uF 20% 25V
C30	1-124-126-00	s	ELECT 47uF 20% 25V
C31	1-162-970-11	s	CERAMIC, CHIP 0.01uF 10% 25V
C32	1-162-970-11	s	CERAMIC, CHIP 0.01uF 10% 25V
C33	1-128-057-11	s	ELECT 330uF 20% 6.3V
C34	1-128-057-11	s	ELECT 330uF 20% 6.3V
C35	1-162-970-11	s	CERAMIC, CHIP 0.01uF 10% 25V
C36	1-162-970-11	s	CERAMIC, CHIP 0.01uF 10% 25V
C37	1-163-035-00	s	CERAMIC, CHIP 0.047uF 50V
C38	1-163-035-00	s	CERAMIC, CHIP 0.047uF 50V
C39	1-162-920-11	s	CERAMIC, CHIP 27PF 5% 50V
C40	1-162-920-11	s	CERAMIC, CHIP 27PF 5% 50V
C41	1-163-038-00	s	CERAMIC, CHIP 0.1uF 25V
C42	1-162-970-11	s	CERAMIC, CHIP 0.01uF 10% 25V
C43	1-162-970-11	s	CERAMIC, CHIP 0.01uF 10% 25V
C44	1-128-057-11	s	ELECT 330uF 20% 6.3V
C45	1-128-057-11	s	ELECT 330uF 20% 6.3V
C46	1-162-970-11	s	CERAMIC, CHIP 0.01uF 10% 25V
C47	1-162-970-11	s	CERAMIC, CHIP 0.01uF 10% 25V
C48	1-164-376-11	s	CERAMIC, CHIP 11PF 5% 50V
C49	1-164-380-11	s	CERAMIC, CHIP 51PF 5% 50V
C50	1-162-912-11	s	CERAMIC 7PF 50V
C51	1-164-380-11	s	CERAMIC, CHIP 51PF 5% 50V
C52	1-124-126-00	s	ELECT 47uF 20% 25V
C54	1-124-126-00	s	ELECT 47uF 20% 25V
C55	1-124-126-00	s	ELECT 47uF 20% 25V
C56	1-124-126-00	s	ELECT 47uF 20% 25V
C57	1-124-126-00	s	ELECT 47uF 20% 25V
C58	1-162-970-11	s	CERAMIC, CHIP 0.01uF 10% 25V
C59	1-163-038-00	s	CERAMIC, CHIP 0.1uF 25V
C60	1-163-038-00	s	CERAMIC, CHIP 0.1uF 25V
C61	1-162-970-11	s	CERAMIC, CHIP 0.01uF 10% 25V
C62	1-162-924-11	s	CERAMIC 56PF 5% 50V
C63	1-162-970-11	s	CERAMIC, CHIP 0.01uF 10% 25V
C64	1-124-126-00	s	ELECT 47uF 20% 25V
C65	1-163-038-00	s	CERAMIC, CHIP 0.1uF 25V
C66	1-124-126-00	s	ELECT 47uF 20% 25V

(MD-81 BOARD : S/N 10031-10340)

Ref. No. or Q'ty	Part No.	SP	Description
C67	1-124-126-00	s	ELECT 47uF 20% 25V
C68	1-162-970-11	s	CERAMIC, CHIP 0.01uF 10% 25V
C69	1-163-038-00	s	CERAMIC, CHIP 0.1uF 25V
C70	1-163-038-00	s	CERAMIC, CHIP 0.1uF 25V
C71	1-163-038-00	s	CERAMIC, CHIP 0.1uF 25V
C72	1-163-038-00	s	CERAMIC, CHIP 0.1uF 25V
C73	1-163-038-00	s	CERAMIC, CHIP 0.1uF 25V
C74	1-163-038-00	s	CERAMIC, CHIP 0.1uF 25V
C75	1-163-038-00	s	CERAMIC, CHIP 0.1uF 25V
C76	1-163-038-00	s	CERAMIC, CHIP 0.1uF 25V
C77	1-162-970-11	s	CERAMIC, CHIP 0.01uF 10% 25V
C78	1-163-038-00	s	CERAMIC, CHIP 0.1uF 25V
C79	1-162-970-11	s	CERAMIC, CHIP 0.01uF 10% 25V
C80	1-164-315-11	s	CERAMIC, CHIP 470PF 10% 50V
C81	1-124-907-11	s	ELECT 10uF 20% 50V
C82	1-162-970-11	s	CERAMIC, CHIP 0.01uF 10% 25V
C83	1-163-038-00	s	CERAMIC, CHIP 0.1uF 25V
C84	1-124-126-00	s	ELECT 47uF 20% 25V
C85	1-124-126-00	s	ELECT 47uF 20% 25V
C86	1-162-970-11	s	CERAMIC, CHIP 0.01uF 10% 25V
C87	1-162-970-11	s	CERAMIC, CHIP 0.01uF 10% 25V
C88	1-124-126-00	s	ELECT 47uF 20% 25V
C89	1-164-005-11	s	CERAMIC, CHIP 0.47uF 25V
C90	1-164-222-11	s	CERAMIC 0.22uF 25V
C91	1-164-005-11	s	CERAMIC, CHIP 0.47uF 25V
C92	1-124-907-11	s	ELECT 10uF 20% 50V
C93	1-124-907-11	s	ELECT 10uF 20% 50V
C94	1-124-443-00	s	ELECT 100uF 20% 10V
C95	1-162-970-11	s	CERAMIC, CHIP 0.01uF 10% 25V
C96	1-124-443-00	s	ELECT 100uF 20% 10V
C97	1-162-970-11	s	CERAMIC, CHIP 0.01uF 10% 25V
C98	1-124-443-00	s	ELECT 100uF 20% 10V
C99	1-162-970-11	s	CERAMIC, CHIP 0.01uF 10% 25V
C100	1-162-970-11	s	CERAMIC, CHIP 0.01uF 10% 25V
C101	1-124-907-11	s	ELECT 10uF 20% 50V
C102	1-124-907-11	s	ELECT 10uF 20% 50V
C103	1-164-005-11	s	CERAMIC, CHIP 0.47uF 25V
C104	1-124-907-11	s	ELECT 10uF 20% 50V
C105	1-162-970-11	s	CERAMIC, CHIP 0.01uF 10% 25V
C106	1-162-970-11	s	CERAMIC, CHIP 0.01uF 10% 25V
C107	1-124-443-00	s	ELECT 100uF 20% 10V
C108	1-162-970-11	s	CERAMIC, CHIP 0.01uF 10% 25V
C110	1-164-217-11	s	CERAMIC, CHIP 150PF 5% 50V
C112	1-124-126-00	s	ELECT 47uF 20% 25V
C113	1-162-970-11	s	CERAMIC, CHIP 0.01uF 10% 25V
C114	1-124-907-11	s	ELECT 10uF 20% 50V
C115	1-162-970-11	s	CERAMIC, CHIP 0.01uF 10% 25V
C116	1-162-970-11	s	CERAMIC, CHIP 0.01uF 10% 25V
C117	1-124-126-00	s	ELECT 47uF 20% 25V
C118	1-162-912-11	s	CERAMIC 7PF 50V
C119	1-162-926-11	s	CERAMIC, CHIP 82PF 5% 50V
C120	1-162-970-11	s	CERAMIC, CHIP 0.01uF 10% 25V
C121	1-124-903-11	s	ELECT 1uF 20% 50V
C122	1-124-126-00	s	ELECT 47uF 20% 25V
C123	1-162-970-11	s	CERAMIC, CHIP 0.01uF 10% 25V
C124	1-164-227-11	s	CERAMIC, CHIP 0.022uF 10% 25V
C125	1-162-959-11	s	CERAMIC, CHIP 330PF 5% 50V
C126	1-135-176-21	s	TANTALUM, CHIP 0.68uF 20% 35V
C127	1-135-091-00	s	TANTALUN, CHIP 1uF 10% 16V

(MD-81 BOARD : S/N 10031-10340)

Ref. No. or Q'ty	Part No.	SP	Description
C128	1-163-038-00	s	CERAMIC, CHIP 0.1uF 25V
C129	1-164-238-11	s	CERAMIC, CHIP 36PF 10% 50V
C130	1-164-466-11	s	CERAMIC, CHIP 240PF 5% 50V
C131	1-164-668-11	s	CERAMIC, CHIP 510PF 5% 50V
C132	1-162-959-11	s	CERAMIC, CHIP 330PF 5% 50V
C133	1-164-217-11	s	CERAMIC, CHIP 150PF 5% 50V
C134	1-163-038-00	s	CERAMIC, CHIP 0.1uF 25V
C138	1-164-393-11	s	CERAMIC, CHIP 430PF 5% 50V
C141	1-163-038-00	s	CERAMIC, CHIP 0.1uF 25V
C143	1-124-126-00	s	ELECT 47uF 20% 25V
C144	1-162-970-11	s	CERAMIC, CHIP 0.01uF 10% 25V
C145	1-162-970-11	s	CERAMIC, CHIP 0.01uF 10% 25V
C146	1-162-970-11	s	CERAMIC, CHIP 0.01uF 10% 25V
C147	1-124-126-00	s	ELECT 47uF 20% 25V
C148	1-124-126-00	s	ELECT 47uF 20% 25V
C149	1-162-970-11	s	CERAMIC, CHIP 0.01uF 10% 25V
C151	1-164-491-11	s	CERAMIC 300PF 5% 50V
C152	1-162-959-11	s	CERAMIC, CHIP 330PF 5% 50V
C153	1-164-392-11	s	CERAMIC, CHIP 390PF 5% 50V
C154	1-163-038-00	s	CERAMIC, CHIP 0.1uF 25V
C170	1-162-970-11	s	CERAMIC, CHIP 0.01uF 10% 25V
C171	1-162-928-11	s	CERAMIC, CHIP 120PF 5% 50V
C172	1-124-126-00	s	ELECT 47uF 20% 25V
C173	1-164-238-11	s	CERAMIC, CHIP 36PF 10% 50V
C174	1-164-385-11	s	CERAMIC, CHIP 160PF 5% 50V
C175	1-162-925-11	s	CERAMIC, CHIP 68PF 5% 50V
C176	1-162-926-11	s	CERAMIC, CHIP 82PF 5% 50V
C178	1-162-970-11	s	CERAMIC, CHIP 0.01uF 10% 25V
C179	1-162-970-11	s	CERAMIC, CHIP 0.01uF 10% 25V
C181	1-162-970-11	s	CERAMIC, CHIP 0.01uF 10% 25V
C182	1-124-126-00	s	ELECT 47uF 20% 25V
C183	1-162-970-11	s	CERAMIC, CHIP 0.01uF 10% 25V
C184	1-162-970-11	s	CERAMIC, CHIP 0.01uF 10% 25V
C185	1-162-970-11	s	CERAMIC, CHIP 0.01uF 10% 25V
C186	1-162-970-11	s	CERAMIC, CHIP 0.01uF 10% 25V
C187	1-162-970-11	s	CERAMIC, CHIP 0.01uF 10% 25V
C188	1-162-970-11	s	CERAMIC, CHIP 0.01uF 10% 25V
C189	1-162-970-11	s	CERAMIC, CHIP 0.01uF 10% 25V
C190	1-162-917-11	s	CERAMIC, CHIP 15PF 5% 50V
C191	1-164-238-11	s	CERAMIC, CHIP 36PF 10% 50V
C192	1-162-920-11	s	CERAMIC, CHIP 27PF 5% 50V
C193	1-162-970-11	s	CERAMIC, CHIP 0.01uF 10% 25V
C194	1-124-126-00	s	ELECT 47uF 20% 25V
C195	1-162-970-11	s	CERAMIC, CHIP 0.01uF 10% 25V
C196	1-163-038-00	s	CERAMIC, CHIP 0.1uF 25V
C197	1-163-038-00	s	CERAMIC, CHIP 0.1uF 25V
C198	1-163-038-00	s	CERAMIC, CHIP 0.1uF 25V
C199	1-163-038-00	s	CERAMIC, CHIP 0.1uF 25V
C200	1-162-970-11	s	CERAMIC, CHIP 0.01uF 10% 25V
C201	1-163-038-00	s	CERAMIC, CHIP 0.1uF 25V
C202	1-162-970-11	s	CERAMIC, CHIP 0.01uF 10% 25V
C204	1-162-970-11	s	CERAMIC, CHIP 0.01uF 10% 25V
C206	1-163-038-00	s	CERAMIC, CHIP 0.1uF 25V
C207	1-163-038-00	s	CERAMIC, CHIP 0.1uF 25V
C208	1-163-038-00	s	CERAMIC, CHIP 0.1uF 25V
C214	1-124-126-00	s	ELECT 47uF 20% 25V
C215	1-164-185-11	s	CERAMIC, CHIP 13PF 5% 50V
C216	1-162-920-11	s	CERAMIC, CHIP 27PF 5% 50V
C217	1-128-057-11	s	ELECT 330uF 20% 6.3V

(MD-81 BOARD : S/N 10031-10340)

Ref. No. or Q'ty	Part No.	SP	Description
C220	1-162-917-11	s	CERAMIC, CHIP 15PF 5% 50V
C221	1-163-038-00	s	CERAMIC, CHIP 0.1uF 25V
C222	1-162-923-11	s	CERAMIC, CHIP 47PF 5% 50V
C223	1-164-385-11	s	CERAMIC, CHIP 160PF 5% 50V
C224	1-162-917-11	s	CERAMIC, CHIP 15PF 5% 50V
C230	1-162-923-11	s	CERAMIC, CHIP 47PF 5% 50V
C236	1-162-970-11	s	CERAMIC, CHIP 0.01uF 10% 25V
C700	1-164-217-11	s	CERAMIC, CHIP 150PF 5% 50V
C701	1-164-315-11	s	CERAMIC, CHIP 470PF 10% 50V
C702	1-124-126-00	s	ELECT 47uF 20% 25V
C703	1-162-970-11	s	CERAMIC, CHIP 0.01uF 10% 25V
C704	1-128-057-11	s	ELECT 330uF 20% 6.3V
C705	1-162-970-11	s	CERAMIC, CHIP 0.01uF 10% 25V
C706	1-162-970-11	s	CERAMIC, CHIP 0.01uF 10% 25V
C707	1-128-057-11	s	ELECT 330uF 20% 6.3V
C708	1-124-126-00	s	ELECT 47uF 20% 25V
C709	1-128-057-11	s	ELECT 330uF 20% 6.3V
C711	1-162-913-11	s	CERAMIC 8PF 50V
C712	1-164-185-11	s	CERAMIC, CHIP 13PF 5% 50V
C713	1-124-126-00	s	ELECT 47uF 20% 25V
C714	1-162-923-11	s	CERAMIC, CHIP 47PF 5% 50V
C715	1-162-923-11	s	CERAMIC, CHIP 47PF 5% 50V
C716	1-162-970-11	s	CERAMIC, CHIP 0.01uF 10% 25V
C717	1-163-038-00	s	CERAMIC, CHIP 0.1uF 25V
C719	1-162-917-11	s	CERAMIC, CHIP 15PF 5% 50V
C720	1-162-970-11	s	CERAMIC, CHIP 0.01uF 10% 25V
C721	1-124-126-00	s	ELECT 47uF 20% 25V
C722	1-124-126-00	s	ELECT 47uF 20% 25V
C723	1-162-923-11	s	CERAMIC, CHIP 47PF 5% 50V
C724	1-162-970-11	s	CERAMIC, CHIP 0.01uF 10% 25V
C727	1-124-126-00	s	ELECT 47uF 20% 25V
C728	1-124-126-00	s	ELECT 47uF 20% 25V
C729	1-162-970-11	s	CERAMIC, CHIP 0.01uF 10% 25V
C730	1-162-970-11	s	CERAMIC, CHIP 0.01uF 10% 25V
C733	1-162-970-11	s	CERAMIC, CHIP 0.01uF 10% 25V
C734	1-163-038-00	s	CERAMIC, CHIP 0.1uF 25V
C735	1-162-925-11	s	CERAMIC, CHIP 68PF 5% 50V
C736	1-162-923-11	s	CERAMIC, CHIP 47PF 5% 50V
C737	1-163-038-00	s	CERAMIC, CHIP 0.1uF 25V
C741	1-162-923-11	s	CERAMIC, CHIP 47PF 5% 50V
C742	1-162-970-11	s	CERAMIC, CHIP 0.01uF 10% 25V
C743	1-124-126-00	s	ELECT 47uF 20% 25V
C744	1-124-126-00	s	ELECT 47uF 20% 25V
C745	1-162-970-11	s	CERAMIC, CHIP 0.01uF 10% 25V
C746	1-162-970-11	s	CERAMIC, CHIP 0.01uF 10% 25V
C747	1-162-970-11	s	CERAMIC, CHIP 0.01uF 10% 25V
C748	1-162-923-11	s	CERAMIC, CHIP 47PF 5% 50V
C749	1-162-970-11	s	CERAMIC, CHIP 0.01uF 10% 25V
C750	1-163-215-00	s	CERAMIC, CHIP 0.0027uF 5% 50V
C751	1-163-038-00	s	CERAMIC, CHIP 0.1uF 25V
C752	1-162-926-11	s	CERAMIC, CHIP 82PF 5% 50V
C753	1-124-126-00	s	ELECT 47uF 20% 25V
C754	1-124-126-00	s	ELECT 47uF 20% 25V
C755	1-162-970-11	s	CERAMIC, CHIP 0.01uF 10% 25V
C756	1-162-970-11	s	CERAMIC, CHIP 0.01uF 10% 25V
C760	1-162-920-11	s	CERAMIC, CHIP 27PF 5% 50V
C761	1-162-970-11	s	CERAMIC, CHIP 0.01uF 10% 25V
C763	1-162-970-11	s	CERAMIC, CHIP 0.01uF 10% 25V
C764	1-162-915-11	s	CERAMIC, CHIP 10PF 50V

(MD-81 BOARD : S/N 10031-10340)

Ref. No. or Q'ty	Part No.	SP	Description
C766	1-163-038-00	s	CERAMIC, CHIP 0.1uF 25V
C767	1-162-918-11	s	CERAMIC, CHIP 18PF 5% 50V
C768	1-162-920-11	s	CERAMIC, CHIP 27PF 5% 50V
C769	1-162-970-11	s	CERAMIC, CHIP 0.01uF 10% 25V
C770	1-162-915-11	s	CERAMIC, CHIP 10PF 50V
C771	1-130-487-00	s	MYLAR 0.022uF 5% 50V
C772	1-130-487-00	s	MYLAR 0.022uF 5% 50V
CN605	1-573-782-21	o	CONNECTOR, PHEC 60P, MALE
CN606	1-573-782-21	o	CONNECTOR, PHEC 60P, MALE
D1	8-719-941-86	s	DIODE DAN202U
D3	8-719-941-86	s	DIODE DAN202U
D4	8-719-941-86	s	DIODE DAN202U
D700	8-719-941-86	s	DIODE DAN202U
D701	8-719-941-86	s	DIODE DAN202U
D702	8-719-800-76	s	DIODE 1SS226
D703	8-719-911-19	s	DIODE 1SS119
DL1	1-415-403-21	s	DELAY LINE 1uS
FL1	1-235-779-11	s	FILTER, LOW-PASS
FL2	1-236-716-11	s	FILTER, LOW-PASS
FL3	1-236-563-11	s	FILTER, BANDPASS 3.58MHz
FL4	1-567-306-11	s	RESONATOR, CERAMIC
FL5	1-236-146-11	s	FILTER, BAND PASS 3.68MHz
IC1	8-759-239-34	s	IC TC74HC4538AF
IC2	8-759-710-86	s	IC NJM2233BM-T1
IC3	8-759-710-86	s	IC NJM2233BM-T1
IC4	8-759-710-86	s	IC NJM2233BM-T1
IC5	8-759-710-86	s	IC NJM2233BM-T1
IC6	8-759-710-86	s	IC NJM2233BM-T1
IC7	8-752-337-04	s	IC CXD1176Q
IC8	8-752-342-61	s	IC CXD2105AQ
IC9	8-752-054-62	s	IC CXA1207AR
IC10	8-752-051-40	s	IC CXA1208R
IC11	8-759-708-05	s	IC NJM78L05A
IC13	8-759-012-00	s	IC MC10H116M
IC700	8-759-239-34	s	IC TC74HC4538AF
IC701	8-759-710-86	s	IC NJM2233BM-T1
IC702	8-759-700-43	s	IC NJM4558M
L1	1-408-785-21	s	INDUCTOR, CHIP 47UH
L2	1-408-785-21	s	INDUCTOR, CHIP 47UH
L3	1-408-785-21	s	INDUCTOR, CHIP 47UH
L4	1-408-785-21	s	INDUCTOR, CHIP 47UH
L5	1-408-785-21	s	INDUCTOR, CHIP 47UH
L7	1-410-384-31	s	INDUCTOR, CHIP 18UH
L8	1-410-387-11	s	INDUCTOR, CHIP 33uH
L10	1-408-785-21	s	INDUCTOR, CHIP 47UH
L11	1-408-785-21	s	INDUCTOR, CHIP 47UH
L12	1-410-388-21	s	INDUCTOR, CHIP 39uH
L13	1-408-785-21	s	INDUCTOR, CHIP 47UH
L14	1-408-785-21	s	INDUCTOR, CHIP 47UH
L15	1-410-383-31	s	INDUCTOR, CHIP 15uH
L16	1-408-785-21	s	INDUCTOR, CHIP 47UH
L17	1-408-785-21	s	INDUCTOR, CHIP 47UH
L18	1-408-785-21	s	INDUCTOR, CHIP 47UH
L19	1-408-785-21	s	INDUCTOR, CHIP 47UH
L20	1-408-785-21	s	INDUCTOR, CHIP 47UH
L21	1-408-785-21	s	INDUCTOR, CHIP 47UH
L22	1-408-785-21	s	INDUCTOR, CHIP 47UH

(MD-81 BOARD : S/N 10031-10340)

Ref. No. or Q'ty	Part No.	SP	Description
L23	1-408-785-21	s	INDUCTOR, CHIP 47UH
L24	1-410-393-11	s	INDUCTOR, CHIP 100UH
L25	1-410-385-11	s	INDUCTOR, CHIP 22uH
L26	1-408-785-21	s	INDUCTOR, CHIP 47UH
L27	1-410-391-11	s	INDUCTOR, CHIP 68uH
L28	1-410-386-11	s	INDUCTOR, CHIP 27uH
L29	1-410-391-11	s	INDUCTOR, CHIP 68uH
L30	1-408-785-21	s	INDUCTOR, CHIP 47UH
L38	1-408-785-21	s	INDUCTOR, CHIP 47UH
L39	1-412-280-31	s	INDUCTOR, CHIP 330UH
L40	1-412-280-31	s	INDUCTOR, CHIP 330UH
L42	1-408-785-21	s	INDUCTOR, CHIP 47UH
L43	1-410-386-11	s	INDUCTOR, CHIP 27uH
L44	1-410-380-31	s	INDUCTOR, CHIP 8.2uH
L45	1-408-785-21	s	INDUCTOR, CHIP 47UH
L47	1-410-386-11	s	INDUCTOR, CHIP 27uH
L527	1-408-785-21	s	INDUCTOR, CHIP 47UH
L700	1-408-785-21	s	INDUCTOR, CHIP 47UH
L701	1-408-785-21	s	INDUCTOR, CHIP 47UH
L702	1-408-785-21	s	INDUCTOR, CHIP 47UH
L703	1-410-382-31	s	INDUCTOR, CHIP 12uH
L704	1-410-379-31	s	INDUCTOR, CHIP 6.8UH
L705	1-410-382-31	s	INDUCTOR, CHIP 12uH
L706	1-410-379-31	s	INDUCTOR, CHIP 6.8UH
L707	1-408-785-21	s	INDUCTOR, CHIP 47UH
L708	1-408-785-21	s	INDUCTOR, CHIP 47UH
L709	1-410-391-11	s	INDUCTOR, CHIP 68uH
L710	1-410-387-11	s	INDUCTOR, CHIP 33uH
L713	1-408-785-21	s	INDUCTOR, CHIP 47UH
L714	1-408-785-21	s	INDUCTOR, CHIP 47UH
L715	1-408-785-21	s	INDUCTOR, CHIP 47UH
L716	1-408-785-21	s	INDUCTOR, CHIP 47UH
L719	1-412-280-31	s	INDUCTOR, CHIP 330UH
Q1	8-729-120-28	s	TRANSISTOR 2SC1623-L5L6
Q2	8-729-120-28	s	TRANSISTOR 2SC1623-L5L6
Q3	8-729-120-28	s	TRANSISTOR 2SC1623-L5L6
Q4	8-729-120-28	s	TRANSISTOR 2SC1623-L5L6
Q5	8-729-120-28	s	TRANSISTOR 2SC1623-L5L6
Q6	8-729-905-18	s	TRANSISTOR DTC144EU
Q7	8-729-905-18	s	TRANSISTOR DTC144EU
Q8	8-729-120-28	s	TRANSISTOR 2SC1623-L5L6
Q9	8-729-120-28	s	TRANSISTOR 2SC1623-L5L6
Q10	8-729-120-28	s	TRANSISTOR 2SC1623-L5L6
Q11	8-729-120-28	s	TRANSISTOR 2SC1623-L5L6
Q12	8-729-120-28	s	TRANSISTOR 2SC1623-L5L6
Q13	8-729-120-28	s	TRANSISTOR 2SC1623-L5L6
Q14	8-729-120-28	s	TRANSISTOR 2SC1623-L5L6
Q17	8-729-120-28	s	TRANSISTOR 2SC1623-L5L6
Q18	8-729-120-28	s	TRANSISTOR 2SC1623-L5L6
Q19	8-729-120-28	s	TRANSISTOR 2SC1623-L5L6
Q20	8-729-120-28	s	TRANSISTOR 2SC1623-L5L6
Q21	8-729-120-28	s	TRANSISTOR 2SC1623-L5L6
Q22	8-729-120-28	s	TRANSISTOR 2SC1623-L5L6
Q23	8-729-120-28	s	TRANSISTOR 2SC1623-L5L6
Q24	8-729-120-28	s	TRANSISTOR 2SC1623-L5L6
Q25	8-729-120-28	s	TRANSISTOR 2SC1623-L5L6
Q26	8-729-120-28	s	TRANSISTOR 2SC1623-L5L6
Q27	8-729-120-28	s	TRANSISTOR 2SC1623-L5L6

(MD-81 BOARD : S/N 10031-10340)

Ref. No. or Q'ty	Part No.	SP	Description
Q28	8-729-120-28	s	TRANSISTOR 2SC1623-L5L6
Q29	8-729-905-12	s	TRANSISTOR DTA144EU
Q30	8-729-905-18	s	TRANSISTOR DTC144EU
Q31	8-729-905-12	s	TRANSISTOR DTA144EU
Q32	8-729-905-18	s	TRANSISTOR DTC144EU
Q33	8-729-905-12	s	TRANSISTOR DTA144EU
Q34	8-729-905-18	s	TRANSISTOR DTC144EU
Q35	8-729-120-28	s	TRANSISTOR 2SC1623-L5L6
Q36	8-729-905-12	s	TRANSISTOR DTA144EU
Q37	8-729-905-12	s	TRANSISTOR DTA144EU
Q38	8-729-905-12	s	TRANSISTOR DTA144EU
Q39	8-729-120-28	s	TRANSISTOR 2SC1623-L5L6
Q40	8-729-905-23	s	TRANSISTOR 2SA1576-R
Q41	8-729-120-28	s	TRANSISTOR 2SC1623-L5L6
Q42	8-729-120-28	s	TRANSISTOR 2SC1623-L5L6
Q45	8-729-120-28	s	TRANSISTOR 2SC1623-L5L6
Q46	8-729-120-28	s	TRANSISTOR 2SC1623-L5L6
Q47	8-729-905-23	s	TRANSISTOR 2SA1576-R
Q48	8-729-905-23	s	TRANSISTOR 2SA1576-R
Q51	8-729-905-23	s	TRANSISTOR 2SA1576-R
Q53	8-729-905-12	s	TRANSISTOR DTA144EU
Q54	8-729-905-18	s	TRANSISTOR DTC144EU
Q55	8-729-905-18	s	TRANSISTOR DTC144EU
Q56	8-729-905-18	s	TRANSISTOR DTC144EU
Q57	8-729-202-38	s	TRANSISTOR 2SC3326N
Q58	8-729-202-38	s	TRANSISTOR 2SC3326N
Q68	8-729-117-32	s	TRANSISTOR 2SC4177
Q69	8-729-905-18	s	TRANSISTOR DTC144EU
Q70	8-729-117-32	s	TRANSISTOR 2SC4177
Q71	8-729-117-16	s	TRANSISTOR 2SA1611-M6
Q72	8-729-905-18	s	TRANSISTOR DTC144EU
Q73	8-729-905-18	s	TRANSISTOR DTC144EU
Q74	8-729-117-32	s	TRANSISTOR 2SC4177
Q75	8-729-117-32	s	TRANSISTOR 2SC4177
Q76	8-729-120-28	s	TRANSISTOR 2SC1623-L5L6
Q77	8-729-903-10	s	TRANSISTOR FMW1
Q78	8-729-905-18	s	TRANSISTOR DTC144EU
Q79	8-729-117-16	s	TRANSISTOR 2SA1611-M6
Q80	8-729-905-12	s	TRANSISTOR DTA144EU
Q81	8-729-120-28	s	TRANSISTOR 2SC1623-L5L6
Q82	8-729-120-28	s	TRANSISTOR 2SC1623-L5L6
Q83	8-729-120-28	s	TRANSISTOR 2SC1623-L5L6
Q84	8-729-102-07	s	TRANSISTOR 2SC2223-F13
Q85	8-729-905-18	s	TRANSISTOR DTC144EU
Q86	8-729-905-18	s	TRANSISTOR DTC144EU
Q87	8-729-120-28	s	TRANSISTOR 2SC1623-L5L6
Q88	8-729-120-28	s	TRANSISTOR 2SC1623-L5L6
Q91	8-729-120-28	s	TRANSISTOR 2SC1623-L5L6
Q92	8-729-120-28	s	TRANSISTOR 2SC1623-L5L6
Q93	8-729-120-28	s	TRANSISTOR 2SC1623-L5L6
Q94	8-729-120-28	s	TRANSISTOR 2SC1623-L5L6
Q95	8-729-905-23	s	TRANSISTOR 2SA1576-R
Q700	8-729-905-12	s	TRANSISTOR DTA144EU
Q701	8-729-905-23	s	TRANSISTOR 2SA1576-R
Q702	8-729-120-28	s	TRANSISTOR 2SC1623-L5L6
Q703	8-729-120-28	s	TRANSISTOR 2SC1623-L5L6
Q704	8-729-905-23	s	TRANSISTOR 2SA1576-R
Q705	8-729-120-28	s	TRANSISTOR 2SC1623-L5L6
Q706	8-729-120-28	s	TRANSISTOR 2SC1623-L5L6

(MD-81 BOARD : S/N 10031-10340)

Ref. No. or Q'ty	Part No.	SP	Description
Q707	8-729-120-28	s	TRANSISTOR 2SC1623-L5L6
Q708	8-729-905-23	s	TRANSISTOR 2SA1576-R
Q709	8-729-120-28	s	TRANSISTOR 2SC1623-L5L6
Q710	8-729-120-28	s	TRANSISTOR 2SC1623-L5L6
Q711	8-729-905-18	s	TRANSISTOR DTC144EU
Q712	8-729-905-12	s	TRANSISTOR DTA144EU
Q713	8-729-905-23	s	TRANSISTOR 2SA1576-R
Q714	8-729-120-28	s	TRANSISTOR 2SC1623-L5L6
Q715	8-729-905-23	s	TRANSISTOR 2SA1576-R
Q716	8-729-120-28	s	TRANSISTOR 2SC1623-L5L6
Q717	8-729-905-23	s	TRANSISTOR 2SA1576-R
Q718	8-729-120-28	s	TRANSISTOR 2SC1623-L5L6
Q719	8-729-905-23	s	TRANSISTOR 2SA1576-R
Q720	8-729-120-28	s	TRANSISTOR 2SC1623-L5L6
Q721	8-729-202-38	s	TRANSISTOR 2SC3326N
Q722	8-729-202-38	s	TRANSISTOR 2SC3326N
Q723	8-729-120-28	s	TRANSISTOR 2SC1623-L5L6
Q724	8-729-120-28	s	TRANSISTOR 2SC1623-L5L6
Q725	8-729-202-38	s	TRANSISTOR 2SC3326N
Q726	8-729-202-38	s	TRANSISTOR 2SC3326N
Q727	8-729-120-28	s	TRANSISTOR 2SC1623-L5L6
Q728	8-729-120-28	s	TRANSISTOR 2SC1623-L5L6
Q729	8-729-120-28	s	TRANSISTOR 2SC1623-L5L6
Q731	8-729-120-28	s	TRANSISTOR 2SC1623-L5L6
Q732	8-729-905-23	s	TRANSISTOR 2SA1576-R
Q733	8-729-120-28	s	TRANSISTOR 2SC1623-L5L6
Q734	8-729-202-38	s	TRANSISTOR 2SC3326N
Q735	8-729-202-38	s	TRANSISTOR 2SC3326N
Q736	8-729-120-28	s	TRANSISTOR 2SC1623-L5L6
Q737	8-729-905-12	s	TRANSISTOR DTA144EU
Q750	8-729-900-65	s	TRANSISTOR DTA144ES
Q751	8-729-900-65	s	TRANSISTOR DTA144ES
Q752	8-729-900-65	s	TRANSISTOR DTA144ES
R1	1-216-833-11	s	METAL, CHIP 10K 5% 1/16W
R2	1-216-823-11	s	METAL, CHIP 1.5K 5% 1/16W
R3	1-216-809-11	s	METAL, CHIP 100 5% 1/16W
R4	1-216-821-11	s	METAL, CHIP 1K 5% 1/16W
R5	1-216-823-11	s	METAL, CHIP 1.5K 5% 1/16W
R6	1-216-825-11	s	METAL, CHIP 2.2K 5% 1/16W
R7	1-216-809-11	s	METAL, CHIP 100 5% 1/16W
R8	1-216-809-11	s	METAL, CHIP 100 5% 1/16W
R9	1-216-825-11	s	METAL, CHIP 2.2K 5% 1/16W
R10	1-216-837-11	s	METAL, CHIP 22K 5% 1/16W
R11	1-216-837-11	s	METAL, CHIP 22K 5% 1/16W
R12	1-216-833-11	s	METAL, CHIP 10K 5% 1/16W
R13	1-218-716-11	s	METAL, CHIP 10K 0.50% 1/16W
R14	1-216-809-11	s	METAL, CHIP 100 5% 1/16W
R15	1-216-833-11	s	METAL, CHIP 10K 5% 1/16W
R16	1-216-833-11	s	METAL, CHIP 10K 5% 1/16W
R17	1-216-821-11	s	METAL, CHIP 1K 5% 1/16W
R18	1-216-821-11	s	METAL, CHIP 1K 5% 1/16W
R19	1-216-849-11	s	METAL, CHIP 220K 5% 1/16W
R21	1-216-825-11	s	METAL, CHIP 2.2K 5% 1/16W
R23	1-218-695-11	s	METAL, CHIP 1.3K 0.50% 1/16W
R24	1-216-821-11	s	METAL, CHIP 1K 5% 1/16W
R25	1-216-823-11	s	METAL, CHIP 1.5K 5% 1/16W
R26	1-218-482-11	s	METAL, CHIP 430 5% 1/16W
R27	1-216-823-11	s	METAL, CHIP 1.5K 5% 1/16W

(MD-81 BOARD : S/N 10031-10340)

Ref. No. or Q'ty	Part No.	SP	Description
R28	1-216-833-11	s	METAL, CHIP 10K 5% 1/16W
R31	1-216-825-11	s	METAL, CHIP 2.2K 5% 1/16W
R32	1-216-821-11	s	METAL, CHIP 1K 5% 1/16W
R33	1-216-821-11	s	METAL, CHIP 1K 5% 1/16W
R34	1-218-706-11	s	METAL, CHIP 3.9K 0.50% 1/16W
R35	1-216-825-11	s	METAL, CHIP 2.2K 5% 1/16W
R36	1-216-821-11	s	METAL, CHIP 1K 5% 1/16W
R37	1-218-482-11	s	METAL, CHIP 430 5% 1/16W
R38	1-216-823-11	s	METAL, CHIP 1.5K 5% 1/16W
R39	1-216-821-11	s	METAL, CHIP 1K 5% 1/16W
R40	1-216-833-11	s	METAL, CHIP 10K 5% 1/16W
R41	1-216-864-11	s	METAL, CHIP 0 5% 1/16W
R43	1-218-671-11	s	METAL, CHIP 130 0.50% 1/16W
R45	1-216-845-11	s	METAL, CHIP 100K 5% 1/16W
R50	1-218-288-11	s	METAL, CHIP 300 5% 1/16W
R52	1-218-288-11	s	METAL, CHIP 300 5% 1/16W
R53	1-216-821-11	s	METAL, CHIP 1K 5% 1/16W
R55	1-218-701-11	s	METAL, CHIP 2.4K 0.50% 1/16W
R56	1-216-821-11	s	METAL, CHIP 1K 5% 1/16W
R57	1-216-821-11	s	METAL, CHIP 1K 5% 1/16W
R58	1-218-701-11	s	METAL, CHIP 2.4K 0.50% 1/16W
R59	1-216-825-11	s	METAL, CHIP 2.2K 5% 1/16W
R60	1-216-821-11	s	METAL, CHIP 1K 5% 1/16W
R61	1-216-821-11	s	METAL, CHIP 1K 5% 1/16W
R62	1-216-821-11	s	METAL, CHIP 1K 5% 1/16W
R63	1-216-821-11	s	METAL, CHIP 1K 5% 1/16W
R64	1-216-821-11	s	METAL, CHIP 1K 5% 1/16W
R65	1-216-820-11	s	METAL, CHIP 820 5% 1/16W
R66	1-216-817-11	s	METAL, CHIP 470 5% 1/16W
R67	1-216-825-11	s	METAL, CHIP 2.2K 5% 1/16W
R73	1-216-833-11	s	METAL, CHIP 10K 5% 1/16W
R74	1-216-821-11	s	METAL, CHIP 1K 5% 1/16W
R75	1-218-345-11	s	METAL, CHIP 9.1K 5% 1/16W
R76	1-218-289-11	s	METAL, CHIP 510 5% 1/16W
R77	1-218-289-11	s	METAL, CHIP 510 5% 1/16W
R78	1-216-833-11	s	METAL, CHIP 10K 5% 1/16W
R79	1-216-823-11	s	METAL, CHIP 1.5K 5% 1/16W
R80	1-218-484-11	s	METAL, CHIP 750 5% 1/16W
R82	1-216-821-11	s	METAL, CHIP 1K 5% 1/16W
R83	1-216-823-11	s	METAL, CHIP 1.5K 5% 1/16W
R84	1-216-825-11	s	METAL, CHIP 2.2K 5% 1/16W
R89	1-216-821-11	s	METAL, CHIP 1K 5% 1/16W
R90	1-216-809-11	s	METAL, CHIP 100 5% 1/16W
R91	1-216-821-11	s	METAL, CHIP 1K 5% 1/16W
R92	1-218-738-11	s	METAL, CHIP 82K 0.5% 1/16W
R93	1-216-813-11	s	METAL, CHIP 220 5% 1/16W
R94	1-218-705-11	s	METAL, CHIP 3.6K 0.50% 1/16W
R95	1-218-705-11	s	METAL, CHIP 3.6K 0.50% 1/16W
R96	1-216-809-11	s	METAL, CHIP 100 5% 1/16W
R97	1-216-813-11	s	METAL, CHIP 220 5% 1/16W
R98	1-216-825-11	s	METAL, CHIP 2.2K 5% 1/16W
R99	1-216-839-11	s	METAL, CHIP 33K 5% 1/16W
R100	1-216-842-11	s	METAL, CHIP 56K 5% 1/16W
R101	1-218-708-11	s	METAL, CHIP 4.7K 0.50% 1/16W
R102	1-216-857-11	s	METAL, CHIP 1M 5% 1/16W
R103	1-216-814-11	s	METAL, CHIP 270 5% 1/16W
R104	1-216-864-11	s	METAL, CHIP 0 5% 1/16W
R105	1-218-700-11	s	METAL, CHIP 2.2K 0.50% 1/16W
R106	1-216-837-11	s	METAL, CHIP 22K 5% 1/16W

(MD-81 BOARD : S/N 10031-10340)

Ref. No. or Q'ty	Part No.	SP	Description
R107	1-216-837-11	s	METAL, CHIP 22K 5% 1/16W
R108	1-216-821-11	s	METAL, CHIP 1K 5% 1/16W
R109	1-216-815-11	s	METAL, CHIP 330 5% 1/16W
R110	1-216-815-11	s	METAL, CHIP 330 5% 1/16W
R111	1-216-821-11	s	METAL, CHIP 1K 5% 1/16W
R112	1-218-740-11	s	METAL, CHIP 100K 0.50% 1/16W
R113	1-216-803-11	s	METAL, CHIP 33 5% 1/16W
R114	1-216-805-11	s	METAL, CHIP 47 5% 1/16W
R115	1-216-815-11	s	METAL, CHIP 330 5% 1/16W
R117	1-216-831-11	s	METAL, CHIP 6.8K 5% 1/16W
R118	1-216-837-11	s	METAL, CHIP 22K 5% 1/16W
R119	1-216-833-11	s	METAL, CHIP 10K 5% 1/16W
R120	1-216-841-11	s	METAL, CHIP 47K 5% 1/16W
R121	1-216-834-11	s	METAL, CHIP 12K 5% 1/16W
R122	1-216-833-11	s	METAL, CHIP 10K 5% 1/16W
R123	1-216-836-11	s	METAL, CHIP 18K 5% 1/16W
R124	1-216-833-11	s	METAL, CHIP 10K 5% 1/16W
R125	1-218-295-11	s	METAL, CHIP 4.3K 5% 1/16W
R126	1-216-832-11	s	METAL, CHIP 8.2K 5% 1/16W
R127	1-216-827-11	s	METAL, CHIP 3.3K 5% 1/16W
R130	1-216-825-11	s	METAL, CHIP 2.2K 5% 1/16W
R131	1-216-822-11	s	METAL, CHIP 1.2K 5% 1/16W
R132	1-218-704-11	s	METAL, CHIP 3.3K 0.50% 1/16W
R133	1-216-841-11	s	METAL, CHIP 47K 5% 1/16W
R134	1-216-841-11	s	METAL, CHIP 47K 5% 1/16W
R135	1-216-841-11	s	METAL, CHIP 47K 5% 1/16W
R137	1-216-837-11	s	METAL, CHIP 22K 5% 1/16W
R138	1-216-864-11	s	METAL, CHIP 0 5% 1/16W
R139	1-216-833-11	s	METAL, CHIP 10K 5% 1/16W
R140	1-216-864-11	s	METAL, CHIP 0 5% 1/16W
R141	1-216-809-11	s	METAL, CHIP 100 5% 1/16W
R144	1-216-825-11	s	METAL, CHIP 2.2K 5% 1/16W
R145	1-218-740-11	s	METAL, CHIP 100K 0.50% 1/16W
R146	1-216-833-11	s	METAL, CHIP 10K 5% 1/16W
R147	1-216-833-11	s	METAL, CHIP 10K 5% 1/16W
R148	1-216-805-11	s	METAL, CHIP 47 5% 1/16W
R149	1-216-832-11	s	METAL, CHIP 8.2K 5% 1/16W
R150	1-216-832-11	s	METAL, CHIP 8.2K 5% 1/16W
R152	1-216-821-11	s	METAL, CHIP 1K 5% 1/16W
R153	1-218-295-11	s	METAL, CHIP 4.3K 5% 1/16W
R154	1-216-795-11	s	METAL, CHIP 6.8K 0.50% 1/16W
R155	1-216-803-11	s	METAL, CHIP 33 5% 1/16W
R156	1-216-825-11	s	METAL, CHIP 2.2K 5% 1/16W
R157	1-216-829-11	s	METAL, CHIP 4.7K 5% 1/16W
R159	1-216-817-11	s	METAL, CHIP 470 5% 1/16W
R160	1-216-817-11	s	METAL, CHIP 470 5% 1/16W
R161	1-216-837-11	s	METAL, CHIP 22K 5% 1/16W
R167	1-216-821-11	s	METAL, CHIP 1K 5% 1/16W
R168	1-218-457-11	s	METAL, CHIP 910 5% 1/16W
R169	1-218-482-11	s	METAL, CHIP 430 5% 1/16W
R171	1-216-864-11	s	METAL, CHIP 0 5% 1/16W
R172	1-216-821-11	s	METAL, CHIP 1K 5% 1/16W
R175	1-216-817-11	s	METAL, CHIP 470 5% 1/16W
R176	1-216-823-11	s	METAL, CHIP 1.5K 5% 1/16W
R179	1-216-827-11	s	METAL, CHIP 3.3K 5% 1/16W
R181	1-218-708-11	s	METAL, CHIP 4.7K 0.50% 1/16W
R182	1-218-706-11	s	METAL, CHIP 3.9K 0.50% 1/16W
R184	1-218-744-11	s	METAL, CHIP 150K 0.50% 1/16W
R185	1-216-846-11	s	METAL, CHIP 120K 5% 1/16W

(MD-81 BOARD : S/N 10031-10340)

Ref. No. or Q'ty	Part No.	SP	Description
R187	1-216-837-11	s	METAL, CHIP 22K 5% 1/16W
R188	1-218-748-11	s	METAL, CHIP 220K 0.50% 1/16W
R189	1-218-704-11	s	METAL, CHIP 3.3K 0.50% 1/16W
R190	1-218-708-11	s	METAL, CHIP 4.7K 0.50% 1/16W
R191	1-218-671-11	s	METAL, CHIP 130 0.50% 1/16W
R192	1-216-837-11	s	METAL, CHIP 22K 5% 1/16W
R193	1-216-841-11	s	METAL, CHIP 47K 5% 1/16W
R194	1-216-841-11	s	METAL, CHIP 47K 5% 1/16W
R195	1-216-841-11	s	METAL, CHIP 47K 5% 1/16W
R196	1-216-816-11	s	METAL, CHIP 390 5% 1/16W
R197	1-216-817-11	s	METAL, CHIP 470 5% 1/16W
R198	1-216-841-11	s	METAL, CHIP 47K 5% 1/16W
R199	1-216-841-11	s	METAL, CHIP 47K 5% 1/16W
R200	1-216-841-11	s	METAL, CHIP 47K 5% 1/16W
R232	1-216-837-11	s	METAL, CHIP 22K 5% 1/16W
R233	1-216-837-11	s	METAL, CHIP 22K 5% 1/16W
R234	1-216-817-11	s	METAL, CHIP 470 5% 1/16W
R235	1-216-817-11	s	METAL, CHIP 470 5% 1/16W
R236	1-216-823-11	s	METAL, CHIP 1.5K 5% 1/16W
R237	1-216-795-11	s	METAL, CHIP 6.8K 0.50% 1/16W
R238	1-216-821-11	s	METAL, CHIP 1K 5% 1/16W
R239	1-218-289-11	s	METAL, CHIP 510 5% 1/16W
R240	1-216-817-11	s	METAL, CHIP 470 5% 1/16W
R241	1-216-817-11	s	METAL, CHIP 470 5% 1/16W
R242	1-216-817-11	s	METAL, CHIP 470 5% 1/16W
R243	1-216-821-11	s	METAL, CHIP 1K 5% 1/16W
R244	1-216-821-11	s	METAL, CHIP 1K 5% 1/16W
R246	1-216-817-11	s	METAL, CHIP 470 5% 1/16W
R247	1-216-821-11	s	METAL, CHIP 1K 5% 1/16W
R248	1-216-821-11	s	METAL, CHIP 1K 5% 1/16W
R249	1-216-821-11	s	METAL, CHIP 1K 5% 1/16W
R250	1-216-821-11	s	METAL, CHIP 1K 5% 1/16W
R251	1-216-821-11	s	METAL, CHIP 1K 5% 1/16W
R252	1-216-821-11	s	METAL, CHIP 1K 5% 1/16W
R254	1-216-821-11	s	METAL, CHIP 1K 5% 1/16W
R255	1-216-821-11	s	METAL, CHIP 1K 5% 1/16W
R256	1-216-814-11	s	METAL, CHIP 270 5% 1/16W
R257	1-216-817-11	s	METAL, CHIP 470 5% 1/16W
R258	1-216-810-11	s	METAL, CHIP 120 5% 1/16W
R259	1-216-837-11	s	METAL, CHIP 22K 5% 1/16W
R260	1-216-837-11	s	METAL, CHIP 22K 5% 1/16W
R261	1-216-817-11	s	METAL, CHIP 470 5% 1/16W
R262	1-216-821-11	s	METAL, CHIP 1K 5% 1/16W
R263	1-216-817-11	s	METAL, CHIP 470 5% 1/16W
R264	1-216-817-11	s	METAL, CHIP 470 5% 1/16W
R265	1-216-817-11	s	METAL, CHIP 470 5% 1/16W
R266	1-216-864-11	s	METAL, CHIP 0 5% 1/16W
R267	1-216-819-11	s	METAL, CHIP 680 5% 1/16W
R268	1-216-813-11	s	METAL, CHIP 220 5% 1/16W
R269	1-216-829-11	s	METAL, CHIP 4.7K 5% 1/16W
R270	1-216-837-11	s	METAL, CHIP 22K 5% 1/16W
R271	1-216-838-11	s	METAL, CHIP 27K 5% 1/16W
R272	1-216-821-11	s	METAL, CHIP 1K 5% 1/16W
R274	1-216-809-11	s	METAL, CHIP 100 5% 1/16W
R275	1-216-809-11	s	METAL, CHIP 100 5% 1/16W
R276	1-216-813-11	s	METAL, CHIP 220 5% 1/16W
R277	1-216-821-11	s	METAL, CHIP 1K 5% 1/16W
R278	1-216-827-11	s	METAL, CHIP 3.3K 5% 1/16W
R279	1-218-705-11	s	METAL, CHIP 3.6K 0.50% 1/16W

(MD-81 BOARD : S/N 10031-10340)

Ref. No. or Q'ty	Part No.	SP	Description
R280	1-216-821-11	s	METAL, CHIP 1K 5% 1/16W
R281	1-216-820-11	s	METAL, CHIP 820 5% 1/16W
R282	1-216-809-11	s	METAL, CHIP 100 5% 1/16W
R283	1-216-825-11	s	METAL, CHIP 2.2K 5% 1/16W
R284	1-218-688-11	s	METAL, CHIP 680 0.50% 1/16W
R286	1-216-817-11	s	METAL, CHIP 470 5% 1/16W
R287	1-216-836-11	s	METAL, CHIP 18K 5% 1/16W
R288	1-216-833-11	s	METAL, CHIP 10K 5% 1/16W
R289	1-216-817-11	s	METAL, CHIP 470 5% 1/16W
R290	1-216-837-11	s	METAL, CHIP 22K 5% 1/16W
R291	1-216-837-11	s	METAL, CHIP 22K 5% 1/16W
R292	1-216-837-11	s	METAL, CHIP 22K 5% 1/16W
R293	1-216-821-11	s	METAL, CHIP 1K 5% 1/16W
R294	1-216-837-11	s	METAL, CHIP 22K 5% 1/16W
R295	1-216-837-11	s	METAL, CHIP 22K 5% 1/16W
R296	1-216-821-11	s	METAL, CHIP 1K 5% 1/16W
R306	1-216-864-11	s	METAL, CHIP 0 5% 1/16W
R307	1-216-864-11	s	METAL, CHIP 0 5% 1/16W
R308	1-216-864-11	s	METAL, CHIP 0 5% 1/16W
R309	1-216-864-11	s	METAL, CHIP 0 5% 1/16W
R311	1-216-864-11	s	METAL, CHIP 0 5% 1/16W
R312	1-216-864-11	s	METAL, CHIP 0 5% 1/16W
R313	1-216-864-11	s	METAL, CHIP 0 5% 1/16W
R314	1-216-864-11	s	METAL, CHIP 0 5% 1/16W
R315	1-216-864-11	s	METAL, CHIP 0 5% 1/16W
R319	1-216-864-11	s	METAL, CHIP 0 5% 1/16W
R320	1-216-864-11	s	METAL, CHIP 0 5% 1/16W
R321	1-216-864-11	s	METAL, CHIP 0 5% 1/16W
R322	1-216-864-11	s	METAL, CHIP 0 5% 1/16W
R323	1-216-864-11	s	METAL, CHIP 0 5% 1/16W
R324	1-216-864-11	s	METAL, CHIP 0 5% 1/16W
R325	1-216-864-11	s	METAL, CHIP 0 5% 1/16W
R326	1-216-864-11	s	METAL, CHIP 0 5% 1/16W
R327	1-216-864-11	s	METAL, CHIP 0 5% 1/16W
R328	1-216-864-11	s	METAL, CHIP 0 5% 1/16W
R329	1-216-864-11	s	METAL, CHIP 0 5% 1/16W
R331	1-218-482-11	s	METAL, CHIP 430 5% 1/16W
R334	1-216-838-11	s	METAL, CHIP 27K 5% 1/16W
R335	1-216-817-11	s	METAL, CHIP 470 5% 1/16W
R336	1-218-729-11	s	METAL, CHIP 36K 0.50% 1/16W
R340	1-216-838-11	s	METAL, CHIP 27K 5% 1/16W
R341	1-216-864-11	s	METAL, CHIP 0 5% 1/16W
R342	1-216-851-11	s	METAL, CHIP 330K 5% 1/16W
R343	1-216-821-11	s	METAL, CHIP 1K 5% 1/16W
R344	1-216-829-11	s	METAL, CHIP 4.7K 5% 1/16W
R345	1-216-809-11	s	METAL, CHIP 100 5% 1/16W
R348	1-216-823-11	s	METAL, CHIP 1.5K 5% 1/16W
R350	1-216-821-11	s	METAL, CHIP 1K 5% 1/16W
R351	1-216-837-11	s	METAL, CHIP 22K 5% 1/16W
R352	1-216-837-11	s	METAL, CHIP 22K 5% 1/16W
R353	1-216-825-11	s	METAL, CHIP 2.2K 5% 1/16W
R354	1-218-727-11	s	METAL, CHIP 30K 0.50% 1/16W
R355	1-218-706-11	s	METAL, CHIP 3.9K 0.50% 1/16W
R360	1-216-864-11	s	METAL, CHIP 0 5% 1/16W
R361	1-216-821-11	s	METAL, CHIP 1K 5% 1/16W
R364	1-216-825-11	s	METAL, CHIP 2.2K 5% 1/16W
R365	1-216-809-11	s	METAL, CHIP 100 5% 1/16W
R700	1-218-724-11	s	METAL, CHIP 22K 0.50% 1/16W
R701	1-216-826-11	s	METAL, CHIP 2.7K 5% 1/16W

(MD-81 BOARD : S/N 10031-10340)

Ref. No. or Q'ty	Part No.	SP	Description
R702	1-218-716-11	s	METAL, CHIP 10K 0.50% 1/16W
R703	1-216-821-11	s	METAL, CHIP 1K 5% 1/16W
R704	1-218-272-11	s	METAL, CHIP 5.1K 5% 1/16W
R705	1-218-883-11	s	METAL, CHIP 33K 0.50 1/16W
R706	1-216-825-11	s	METAL, CHIP 2.2K 5% 1/16W
R707	1-216-809-11	s	METAL, CHIP 100 5% 1/16W
R708	1-218-272-11	s	METAL, CHIP 5.1K 5% 1/16W
R709	1-216-809-11	s	METAL, CHIP 100 5% 1/16W
R710	1-216-826-11	s	METAL, CHIP 2.7K 5% 1/16W
R711	1-216-809-11	s	METAL, CHIP 100 5% 1/16W
R712	1-216-809-11	s	METAL, CHIP 100 5% 1/16W
R714	1-216-809-11	s	METAL, CHIP 100 5% 1/16W
R715	1-216-838-11	s	METAL, CHIP 27K 5% 1/16W
R716	1-216-837-11	s	METAL, CHIP 22K 5% 1/16W
R717	1-218-723-11	s	METAL, CHIP 20K 0.50% 1/16W
R718	1-216-817-11	s	METAL, CHIP 470 5% 1/16W
R719	1-216-817-11	s	METAL, CHIP 470 5% 1/16W
R720	1-218-482-11	s	METAL, CHIP 430 5% 1/16W
R721	1-216-825-11	s	METAL, CHIP 2.2K 5% 1/16W
R722	1-216-825-11	s	METAL, CHIP 2.2K 5% 1/16W
R723	1-216-825-11	s	METAL, CHIP 2.2K 5% 1/16W
R724	1-216-809-11	s	METAL, CHIP 100 5% 1/16W
R725	1-216-809-11	s	METAL, CHIP 100 5% 1/16W
R726	1-218-688-11	s	METAL, CHIP 680 0.50% 1/16W
R727	1-216-838-11	s	METAL, CHIP 27K 5% 1/16W
R728	1-216-826-11	s	METAL, CHIP 2.7K 5% 1/16W
R729	1-216-838-11	s	METAL, CHIP 27K 5% 1/16W
R730	1-216-837-11	s	METAL, CHIP 22K 5% 1/16W
R731	1-218-723-11	s	METAL, CHIP 20K 0.50% 1/16W
R732	1-216-817-11	s	METAL, CHIP 470 5% 1/16W
R733	1-216-817-11	s	METAL, CHIP 470 5% 1/16W
R734	1-218-482-11	s	METAL, CHIP 430 5% 1/16W
R735	1-216-825-11	s	METAL, CHIP 2.2K 5% 1/16W
R736	1-216-809-11	s	METAL, CHIP 100 5% 1/16W
R737	1-216-825-11	s	METAL, CHIP 2.2K 5% 1/16W
R738	1-216-833-11	s	METAL, CHIP 10K 5% 1/16W
R739	1-216-821-11	s	METAL, CHIP 1K 5% 1/16W
R740	1-216-821-11	s	METAL, CHIP 1K 5% 1/16W
R741	1-216-809-11	s	METAL, CHIP 100 5% 1/16W
R742	1-216-809-11	s	METAL, CHIP 100 5% 1/16W
R743	1-216-809-11	s	METAL, CHIP 100 5% 1/16W
R744	1-216-825-11	s	METAL, CHIP 2.2K 5% 1/16W
R745	1-216-833-11	s	METAL, CHIP 10K 5% 1/16W
R746	1-218-700-11	s	METAL, CHIP 2.2K 0.50% 1/16W
R747	1-216-809-11	s	METAL, CHIP 100 5% 1/16W
R749	1-218-698-11	s	METAL, CHIP 1.8K 0.50% 1/16W
R751	1-216-833-11	s	METAL, CHIP 10K 5% 1/16W
R752	1-216-833-11	s	METAL, CHIP 10K 5% 1/16W
R753	1-218-708-11	s	METAL, CHIP 4.7K 0.50% 1/16W
R754	1-218-705-11	s	METAL, CHIP 3.6K 0.50% 1/16W
R757	1-216-817-11	s	METAL, CHIP 470 5% 1/16W
R758	1-216-829-11	s	METAL, CHIP 4.7K 5% 1/16W
R759	1-216-821-11	s	METAL, CHIP 1K 5% 1/16W
R760	1-216-809-11	s	METAL, CHIP 100 5% 1/16W
R761	1-216-809-11	s	METAL, CHIP 100 5% 1/16W
R762	1-216-803-11	s	METAL, CHIP 33 5% 1/16W
R763	1-216-803-11	s	METAL, CHIP 33 5% 1/16W
R764	1-216-812-11	s	METAL, CHIP 180 5% 1/16W
R766	1-216-833-11	s	METAL, CHIP 10K 5% 1/16W

(MD-81 BOARD : S/N 10031-10340)

Ref. No. or Q'ty	Part No.	SP	Description
R768	1-216-806-11	s	METAL, CHIP 56 5% 1/16W
R769	1-216-809-11	s	METAL, CHIP 100 5% 1/16W
R771	1-216-838-11	s	METAL, CHIP 27K 5% 1/16W
R772	1-216-837-11	s	METAL, CHIP 22K 5% 1/16W
R773	1-218-883-11	s	METAL, CHIP 33K 0.50 1/16W
R774	1-216-817-11	s	METAL, CHIP 470 5% 1/16W
R775	1-216-817-11	s	METAL, CHIP 470 5% 1/16W
R776	1-218-482-11	s	METAL, CHIP 430 5% 1/16W
R777	1-216-825-11	s	METAL, CHIP 2.2K 5% 1/16W
R779	1-216-864-11	s	METAL, CHIP 0 5% 1/16W
R780	1-218-700-11	s	METAL, CHIP 2.2K 0.50% 1/16W
R782	1-216-825-11	s	METAL, CHIP 2.2K 5% 1/16W
R784	1-218-289-11	s	METAL, CHIP 510 5% 1/16W
R785	1-216-817-11	s	METAL, CHIP 470 5% 1/16W
R786	1-216-841-11	s	METAL, CHIP 47K 5% 1/16W
R787	1-216-841-11	s	METAL, CHIP 47K 5% 1/16W
R788	1-216-825-11	s	METAL, CHIP 2.2K 5% 1/16W
R789	1-216-838-11	s	METAL, CHIP 27K 5% 1/16W
R790	1-216-837-11	s	METAL, CHIP 22K 5% 1/16W
R792	1-218-289-11	s	METAL, CHIP 510 5% 1/16W
R793	1-216-817-11	s	METAL, CHIP 470 5% 1/16W
R794	1-216-841-11	s	METAL, CHIP 47K 5% 1/16W
R795	1-216-841-11	s	METAL, CHIP 47K 5% 1/16W
R796	1-216-825-11	s	METAL, CHIP 2.2K 5% 1/16W
R797	1-216-809-11	s	METAL, CHIP 100 5% 1/16W
R798	1-216-823-11	s	METAL, CHIP 1.5K 5% 1/16W
R799	1-218-708-11	s	METAL, CHIP 4.7K 0.50% 1/16W
R800	1-218-313-11	s	METAL, CHIP 560 1% 1/16W
R801	1-218-700-11	s	METAL, CHIP 2.2K 0.50% 1/16W
R802	1-216-825-11	s	METAL, CHIP 2.2K 5% 1/16W
R804	1-216-838-11	s	METAL, CHIP 27K 5% 1/16W
R805	1-216-837-11	s	METAL, CHIP 22K 5% 1/16W
R807	1-216-864-11	s	METAL, CHIP 0 5% 1/16W
R808	1-216-821-11	s	METAL, CHIP 1K 5% 1/16W
R810	1-216-825-11	s	METAL, CHIP 2.2K 5% 1/16W
R812	1-218-289-11	s	METAL, CHIP 510 5% 1/16W
R813	1-216-817-11	s	METAL, CHIP 470 5% 1/16W
R814	1-216-841-11	s	METAL, CHIP 47K 5% 1/16W
R815	1-216-841-11	s	METAL, CHIP 47K 5% 1/16W
R816	1-220-373-11	s	METAL, CHIP 62K 0.50% 1/16W
R817	1-220-373-11	s	METAL, CHIP 62K 0.50% 1/16W
R818	1-216-825-11	s	METAL, CHIP 2.2K 5% 1/16W
R819	1-216-829-11	s	METAL, CHIP 4.7K 5% 1/16W
R820	1-216-841-11	s	METAL, CHIP 47K 5% 1/16W
R821	1-216-841-11	s	METAL, CHIP 47K 5% 1/16W
R822	1-216-841-11	s	METAL, CHIP 47K 5% 1/16W
R823	1-216-841-11	s	METAL, CHIP 47K 5% 1/16W
R824	1-216-837-11	s	METAL, CHIP 22K 5% 1/16W
R825	1-216-817-11	s	METAL, CHIP 470 5% 1/16W
R826	1-216-809-11	s	METAL, CHIP 100 5% 1/16W
R828	1-216-809-11	s	METAL, CHIP 100 5% 1/16W
R829	1-216-809-11	s	METAL, CHIP 100 5% 1/16W
R830	1-218-289-11	s	METAL, CHIP 510 5% 1/16W
R833	1-216-817-11	s	METAL, CHIP 470 5% 1/16W
R850	1-249-415-11	s	CARBON 680 5% 1/4W
R851	1-249-415-11	s	CARBON 680 5% 1/4W
R852	1-249-415-11	s	CARBON 680 5% 1/4W
RV1	1-238-798-11	s	RES, ADJ METAL 500

(MD-81 BOARD : S/N 10031-10340)

Ref. No. or Q'ty	Part No.	SP	Description
RV2	1-238-801-11	s	RES, ADJ METAL 5K
RV3	1-238-801-11	s	RES, ADJ METAL 5K
RV4	1-238-803-11	s	RES, ADJ METAL 20K
RV5	1-238-803-11	s	RES, ADJ METAL 20K
RV6	1-238-801-11	s	RES, ADJ METAL 5K
RV7	1-238-801-11	s	RES, ADJ METAL 5K
RV8	1-238-801-11	s	RES, ADJ METAL 5K
RV10	1-238-804-11	s	RES, ADJ METAL 50K
RV13	1-238-799-11	s	RES, ADJ METAL 1K
RV14	1-238-802-11	s	RES, ADJ METAL 10K
RV15	1-238-801-11	s	RES, ADJ METAL 5K
RV16	1-238-801-11	s	RES, ADJ METAL 5K
RV17	1-238-799-11	s	RES, ADJ METAL 1K
RV700	1-238-799-11	s	RES, ADJ METAL 1K
RV701	1-238-800-11	s	RES, ADJ METAL 2K
RV703	1-238-800-11	s	RES, ADJ METAL 2K
RV704	1-238-800-11	s	RES, ADJ METAL 2K
RV705	1-238-800-11	s	RES, ADJ METAL 2K
RV706	1-238-800-11	s	RES, ADJ METAL 2K
RV707	1-238-800-11	s	RES, ADJ METAL 2K
X1	1-577-080-11	s	CRYSTAL 3.579545Hz

MD-81 BOARD : 10341 and higher

Ref. No. or Q'ty	Part No.	SP	Description
1pc	A-8271-225-A	o	MOUNTED CIRCUIT BOARD, MD-81
2pcs	2-251-622-11	s	LEVER, PC BOARD
C1	1-126-103-11	s	ELECT 470uF 20% 16V
C2	1-128-057-11	s	ELECT 330uF 20% 6.3V
C3	1-162-970-11	s	CERAMIC, CHIP 0.01uF 10% 25V
C4	1-162-970-11	s	CERAMIC, CHIP 0.01uF 10% 25V
C7	1-162-970-11	s	CERAMIC, CHIP 0.01uF 10% 25V
C8	1-124-126-00	s	ELECT 47uF 20% 25V
C9	1-162-923-11	s	CERAMIC, CHIP 47PF 5% 50V
C10	1-162-923-11	s	CERAMIC, CHIP 47PF 5% 50V
C11	1-128-057-11	s	ELECT 330uF 20% 6.3V
C12	1-128-057-11	s	ELECT 330uF 20% 6.3V
C13	1-162-970-11	s	CERAMIC, CHIP 0.01uF 10% 25V
C14	1-162-970-11	s	CERAMIC, CHIP 0.01uF 10% 25V
C15	1-124-126-00	s	ELECT 47uF 20% 25V
C18	1-162-917-11	s	CERAMIC, CHIP 15PF 5% 50V
C19	1-124-126-00	s	ELECT 47uF 20% 25V
C22	1-124-126-00	s	ELECT 47uF 20% 25V
C25	1-124-126-00	s	ELECT 47uF 20% 25V
C26	1-124-126-00	s	ELECT 47uF 20% 25V
C27	1-124-126-00	s	ELECT 47uF 20% 25V
C29	1-124-126-00	s	ELECT 47uF 20% 25V
C30	1-124-126-00	s	ELECT 47uF 20% 25V
C31	1-162-970-11	s	CERAMIC, CHIP 0.01uF 10% 25V
C32	1-162-970-11	s	CERAMIC, CHIP 0.01uF 10% 25V
C33	1-128-057-11	s	ELECT 330uF 20% 6.3V
C34	1-128-057-11	s	ELECT 330uF 20% 6.3V
C35	1-162-970-11	s	CERAMIC, CHIP 0.01uF 10% 25V
C36	1-162-970-11	s	CERAMIC, CHIP 0.01uF 10% 25V
C37	1-163-035-00	s	CERAMIC, CHIP 0.047uF 50V
C38	1-163-035-00	s	CERAMIC, CHIP 0.047uF 50V
C39	1-162-920-11	s	CERAMIC, CHIP 27PF 5% 50V
C40	1-162-920-11	s	CERAMIC, CHIP 27PF 5% 50V
C41	1-163-038-00	s	CERAMIC, CHIP 0.1uF 25V
C42	1-162-970-11	s	CERAMIC, CHIP 0.01uF 10% 25V
C43	1-162-970-11	s	CERAMIC, CHIP 0.01uF 10% 25V
C44	1-128-057-11	s	ELECT 330uF 20% 6.3V
C45	1-128-057-11	s	ELECT 330uF 20% 6.3V
C46	1-162-970-11	s	CERAMIC, CHIP 0.01uF 10% 25V
C47	1-162-970-11	s	CERAMIC, CHIP 0.01uF 10% 25V
C48	1-164-376-11	s	CERAMIC, CHIP 11PF 5% 50V
C49	1-164-380-11	s	CERAMIC, CHIP 51PF 5% 50V
C50	1-162-912-11	s	CERAMIC 7PF 50V
C51	1-164-380-11	s	CERAMIC, CHIP 51PF 5% 50V
C52	1-124-126-00	s	ELECT 47uF 20% 25V
C54	1-124-126-00	s	ELECT 47uF 20% 25V
C55	1-124-126-00	s	ELECT 47uF 20% 25V
C56	1-124-126-00	s	ELECT 47uF 20% 25V
C57	1-124-126-00	s	ELECT 47uF 20% 25V
C58	1-162-970-11	s	CERAMIC, CHIP 0.01uF 10% 25V
C59	1-163-038-00	s	CERAMIC, CHIP 0.1uF 25V
C60	1-163-038-00	s	CERAMIC, CHIP 0.1uF 25V
C61	1-162-970-11	s	CERAMIC, CHIP 0.01uF 10% 25V
C62	1-162-924-11	s	CERAMIC 56PF 5% 50V
C63	1-162-970-11	s	CERAMIC, CHIP 0.01uF 10% 25V
C64	1-124-126-00	s	ELECT 47uF 20% 25V
C65	1-163-038-00	s	CERAMIC, CHIP 0.1uF 25V
C66	1-124-126-00	s	ELECT 47uF 20% 25V

(MD-81 BOARD : 10341 and higher)

Ref. No. or Q'ty	Part No.	SP	Description
C67	1-124-126-00	s	ELECT 47uF 20% 25V
C68	1-162-970-11	s	CERAMIC, CHIP 0.01uF 10% 25V
C69	1-163-038-00	s	CERAMIC, CHIP 0.1uF 25V
C70	1-163-038-00	s	CERAMIC, CHIP 0.1uF 25V
C71	1-163-038-00	s	CERAMIC, CHIP 0.1uF 25V
C72	1-163-038-00	s	CERAMIC, CHIP 0.1uF 25V
C73	1-163-038-00	s	CERAMIC, CHIP 0.1uF 25V
C74	1-163-038-00	s	CERAMIC, CHIP 0.1uF 25V
C75	1-163-038-00	s	CERAMIC, CHIP 0.1uF 25V
C76	1-163-038-00	s	CERAMIC, CHIP 0.1uF 25V
C77	1-162-970-11	s	CERAMIC, CHIP 0.01uF 10% 25V
C78	1-163-038-00	s	CERAMIC, CHIP 0.1uF 25V
C79	1-162-970-11	s	CERAMIC, CHIP 0.01uF 10% 25V
C80	1-164-315-11	s	CERAMIC, CHIP 470PF 10% 50V
C81	1-124-907-11	s	ELECT 10uF 20% 50V
C82	1-162-970-11	s	CERAMIC, CHIP 0.01uF 10% 25V
C83	1-163-038-00	s	CERAMIC, CHIP 0.1uF 25V
C84	1-124-126-00	s	ELECT 47uF 20% 25V
C85	1-124-126-00	s	ELECT 47uF 20% 25V
C86	1-162-970-11	s	CERAMIC, CHIP 0.01uF 10% 25V
C87	1-162-970-11	s	CERAMIC, CHIP 0.01uF 10% 25V
C88	1-124-126-00	s	ELECT 47uF 20% 25V
C89	1-164-005-11	s	CERAMIC, CHIP 0.47uF 25V
C90	1-164-222-11	s	CERAMIC 0.22uF 25V
C91	1-164-005-11	s	CERAMIC, CHIP 0.47uF 25V
C92	1-124-907-11	s	ELECT 10uF 20% 50V
C93	1-124-907-11	s	ELECT 10uF 20% 50V
C94	1-124-443-00	s	ELECT 100uF 20% 10V
C95	1-162-970-11	s	CERAMIC, CHIP 0.01uF 10% 25V
C96	1-124-443-00	s	ELECT 100uF 20% 10V
C97	1-162-970-11	s	CERAMIC, CHIP 0.01uF 10% 25V
C98	1-124-443-00	s	ELECT 100uF 20% 10V
C99	1-162-970-11	s	CERAMIC, CHIP 0.01uF 10% 25V
C100	1-162-970-11	s	CERAMIC, CHIP 0.01uF 10% 25V
C101	1-124-907-11	s	ELECT 10uF 20% 50V
C102	1-124-907-11	s	ELECT 10uF 20% 50V
C103	1-164-005-11	s	CERAMIC, CHIP 0.47uF 25V
C104	1-124-907-11	s	ELECT 10uF 20% 50V
C105	1-162-970-11	s	CERAMIC, CHIP 0.01uF 10% 25V
C106	1-162-970-11	s	CERAMIC, CHIP 0.01uF 10% 25V
C107	1-124-443-00	s	ELECT 100uF 20% 10V
C108	1-162-970-11	s	CERAMIC, CHIP 0.01uF 10% 25V
C110	1-164-217-11	s	CERAMIC, CHIP 150PF 5% 50V
C112	1-124-126-00	s	ELECT 47uF 20% 25V
C113	1-162-970-11	s	CERAMIC, CHIP 0.01uF 10% 25V
C114	1-124-907-11	s	ELECT 10uF 20% 50V
C115	1-162-970-11	s	CERAMIC, CHIP 0.01uF 10% 25V
C116	1-162-970-11	s	CERAMIC, CHIP 0.01uF 10% 25V
C117	1-124-126-00	s	ELECT 47uF 20% 25V
C118	1-162-912-11	s	CERAMIC 7PF 50V
C119	1-162-926-11	s	CERAMIC, CHIP 82PF 5% 50V
C120	1-162-970-11	s	CERAMIC, CHIP 0.01uF 10% 25V
C121	1-124-903-11	s	ELECT 1uF 20% 50V
C122	1-124-126-00	s	ELECT 47uF 20% 25V
C123	1-162-970-11	s	CERAMIC, CHIP 0.01uF 10% 25V
C124	1-164-227-11	s	CERAMIC, CHIP 0.022uF 10% 25V
C125	1-162-959-11	s	CERAMIC, CHIP 330PF 5% 50V
C126	1-135-176-21	s	TANTALUM, CHIP 0.68uF 20% 35V
C127	1-135-091-00	s	TANTALUN, CHIP 1uF 10% 16V

(MD-81 BOARD : 10341 and higher)

Ref. No. or Q'ty	Part No.	SP	Description
C128	1-163-038-00	s	CERAMIC, CHIP 0.1uF 25V
C129	1-164-238-11	s	CERAMIC, CHIP 36PF 10% 50V
C130	1-164-466-11	s	CERAMIC, CHIP 240PF 5% 50V
C131	1-164-668-11	s	CERAMIC, CHIP 510PF 5% 50V
C132	1-162-959-11	s	CERAMIC, CHIP 330PF 5% 50V
C133	1-164-217-11	s	CERAMIC, CHIP 150PF 5% 50V
C134	1-163-038-00	s	CERAMIC, CHIP 0.1uF 25V
C138	1-164-393-11	s	CERAMIC, CHIP 430PF 5% 50V
C141	1-163-038-00	s	CERAMIC, CHIP 0.1uF 25V
C143	1-124-126-00	s	ELECT 47uF 20% 25V
C144	1-162-970-11	s	CERAMIC, CHIP 0.01uF 10% 25V
C145	1-162-970-11	s	CERAMIC, CHIP 0.01uF 10% 25V
C146	1-162-970-11	s	CERAMIC, CHIP 0.01uF 10% 25V
C147	1-124-126-00	s	ELECT 47uF 20% 25V
C148	1-124-126-00	s	ELECT 47uF 20% 25V
C149	1-162-970-11	s	CERAMIC, CHIP 0.01uF 10% 25V
C151	1-164-491-11	s	CERAMIC 300PF 5% 50V
C152	1-162-959-11	s	CERAMIC, CHIP 330PF 5% 50V
C153	1-164-392-11	s	CERAMIC, CHIP 390PF 5% 50V
C154	1-163-038-00	s	CERAMIC, CHIP 0.1uF 25V
C194	1-124-126-00	s	ELECT 47uF 20% 25V
C195	1-162-970-11	s	CERAMIC, CHIP 0.01uF 10% 25V
C196	1-163-038-00	s	CERAMIC, CHIP 0.1uF 25V
C197	1-163-038-00	s	CERAMIC, CHIP 0.1uF 25V
C198	1-163-038-00	s	CERAMIC, CHIP 0.1uF 25V
C199	1-163-038-00	s	CERAMIC, CHIP 0.1uF 25V
C200	1-162-970-11	s	CERAMIC, CHIP 0.01uF 10% 25V
C201	1-163-038-00	s	CERAMIC, CHIP 0.1uF 25V
C202	1-162-970-11	s	CERAMIC, CHIP 0.01uF 10% 25V
C203	1-162-919-11	s	CERAMIC, CHIP 220PF 5% 50V
C204	1-162-970-11	s	CERAMIC, CHIP 0.01uF 10% 25V
C206	1-163-038-00	s	CERAMIC, CHIP 0.1uF 25V
C207	1-163-038-00	s	CERAMIC, CHIP 0.1uF 25V
C208	1-163-038-00	s	CERAMIC, CHIP 0.1uF 25V
C214	1-124-126-00	s	ELECT 47uF 20% 25V
C215	1-164-379-11	s	CERAMIC, CHIP 43PF 5% 50V
C217	1-128-057-11	s	ELECT 330uF 20% 6.3V
C220	1-162-917-11	s	CERAMIC, CHIP 15PF 5% 50V
C221	1-163-038-00	s	CERAMIC, CHIP 0.1uF 25V
C222	1-162-923-11	s	CERAMIC, CHIP 47PF 5% 50V
C223	1-164-385-11	s	CERAMIC, CHIP 160PF 5% 50V
C224	1-162-917-11	s	CERAMIC, CHIP 15PF 5% 50V
C230	1-162-923-11	s	CERAMIC, CHIP 47PF 5% 50V
C236	1-162-970-11	s	CERAMIC, CHIP 0.01uF 10% 25V
C507	1-162-970-11	s	CERAMIC, CHIP 0.01uF 10% 25V
C508	1-124-126-00	s	ELECT 47uF 20% 25V
C509	1-162-970-11	s	CERAMIC, CHIP 0.01uF 10% 25V
C517	1-162-922-11	s	CERAMIC, CHIP 39PF 5% 50V
C518	1-162-917-11	s	CERAMIC, CHIP 15PF 5% 50V
C519	1-162-970-11	s	CERAMIC, CHIP 0.01uF 10% 25V
C520	1-162-970-11	s	CERAMIC, CHIP 0.01uF 10% 25V
C521	1-164-281-11	s	CERAMIC, CHIP 180PF 5% 50V
C522	1-162-460-11	s	CERAMIC, CHIP 62PF 5% 50V
C539	1-162-970-11	s	CERAMIC, CHIP 0.01uF 10% 25V
C577	1-162-970-11	s	CERAMIC, CHIP 0.01uF 10% 25V
C579	1-162-926-11	s	CERAMIC, CHIP 82PF 5% 50V
C580	1-162-970-11	s	CERAMIC, CHIP 0.01uF 10% 25V
C581	1-162-970-11	s	CERAMIC, CHIP 0.01uF 10% 25V
C582	1-162-970-11	s	CERAMIC, CHIP 0.01uF 10% 25V

(MD-81 BOARD : 10341 and higher)

Ref. No. or Q'ty	Part No.	SP	Description
C584	1-164-390-11	s	CERAMIC, CHIP 330PF 5% 50V
C585	1-164-378-11	s	CERAMIC, CHIP 30PF 5% 50V
C586	1-162-460-11	s	CERAMIC, CHIP 62PF 5% 50V
C700	1-164-217-11	s	CERAMIC, CHIP 150PF 5% 50V
C701	1-164-315-11	s	CERAMIC, CHIP 470PF 10% 50V
C702	1-124-126-00	s	ELECT 47uF 20% 25V
C703	1-162-970-11	s	CERAMIC, CHIP 0.01uF 10% 25V
C704	1-128-057-11	s	ELECT 330uF 20% 6.3V
C705	1-162-970-11	s	CERAMIC, CHIP 0.01uF 10% 25V
C706	1-162-970-11	s	CERAMIC, CHIP 0.01uF 10% 25V
C707	1-128-057-11	s	ELECT 330uF 20% 6.3V
C708	1-124-126-00	s	ELECT 47uF 20% 25V
C709	1-128-057-11	s	ELECT 330uF 20% 6.3V
C711	1-162-913-11	s	CERAMIC 8PF 50V
C712	1-164-185-11	s	CERAMIC, CHIP 13PF 5% 50V
C713	1-124-126-00	s	ELECT 47uF 20% 25V
C714	1-162-923-11	s	CERAMIC, CHIP 47PF 5% 50V
C715	1-162-923-11	s	CERAMIC, CHIP 47PF 5% 50V
C716	1-162-970-11	s	CERAMIC, CHIP 0.01uF 10% 25V
C717	1-163-038-00	s	CERAMIC, CHIP 0.1uF 25V
C719	1-162-917-11	s	CERAMIC, CHIP 15PF 5% 50V
C720	1-162-970-11	s	CERAMIC, CHIP 0.01uF 10% 25V
C721	1-124-126-00	s	ELECT 47uF 20% 25V
C722	1-124-126-00	s	ELECT 47uF 20% 25V
C723	1-162-923-11	s	CERAMIC, CHIP 47PF 5% 50V
C727	1-124-126-00	s	ELECT 47uF 20% 25V
C728	1-124-126-00	s	ELECT 47uF 20% 25V
C729	1-162-970-11	s	CERAMIC, CHIP 0.01uF 10% 25V
C730	1-162-970-11	s	CERAMIC, CHIP 0.01uF 10% 25V
C733	1-162-970-11	s	CERAMIC, CHIP 0.01uF 10% 25V
C734	1-163-038-00	s	CERAMIC, CHIP 0.1uF 25V
C735	1-162-925-11	s	CERAMIC, CHIP 68PF 5% 50V
C736	1-162-923-11	s	CERAMIC, CHIP 47PF 5% 50V
C737	1-163-038-00	s	CERAMIC, CHIP 0.1uF 25V
C741	1-162-923-11	s	CERAMIC, CHIP 47PF 5% 50V
C742	1-162-970-11	s	CERAMIC, CHIP 0.01uF 10% 25V
C743	1-124-126-00	s	ELECT 47uF 20% 25V
C744	1-124-126-00	s	ELECT 47uF 20% 25V
C745	1-162-970-11	s	CERAMIC, CHIP 0.01uF 10% 25V
C746	1-162-970-11	s	CERAMIC, CHIP 0.01uF 10% 25V
C747	1-162-970-11	s	CERAMIC, CHIP 0.01uF 10% 25V
C748	1-162-923-11	s	CERAMIC, CHIP 47PF 5% 50V
C749	1-162-970-11	s	CERAMIC, CHIP 0.01uF 10% 25V
C750	1-163-215-00	s	CERAMIC, CHIP 0.0027uF 5% 50V
C751	1-163-038-00	s	CERAMIC, CHIP 0.1uF 25V
C752	1-162-926-11	s	CERAMIC, CHIP 82PF 5% 50V
C753	1-124-126-00	s	ELECT 47uF 20% 25V
C754	1-124-126-00	s	ELECT 47uF 20% 25V
C755	1-162-970-11	s	CERAMIC, CHIP 0.01uF 10% 25V
C756	1-162-970-11	s	CERAMIC, CHIP 0.01uF 10% 25V
C760	1-162-920-11	s	CERAMIC, CHIP 27PF 5% 50V
C761	1-162-970-11	s	CERAMIC, CHIP 0.01uF 10% 25V
C763	1-162-970-11	s	CERAMIC, CHIP 0.01uF 10% 25V
C764	1-162-915-11	s	CERAMIC, CHIP 10PF 50V
C766	1-163-038-00	s	CERAMIC, CHIP 0.1uF 25V
C767	1-162-918-11	s	CERAMIC, CHIP 18PF 5% 50V
C769	1-162-970-11	s	CERAMIC, CHIP 0.01uF 10% 25V
C770	1-162-915-11	s	CERAMIC, CHIP 10PF 50V
C771	1-164-227-11	s	CERAMIC,CHIP 22000PF 10% 50V

(MD-81 BOARD : 10341 and higher)

Ref. No. or Q'ty	Part No.	SP	Description
C772	1-164-227-11	s	CERAMIC,CHIP 22000PF 10% 50V
C773	1-162-914-11	s	CERAMIC, CHIP 9PF 50V
C774	1-124-126-00	s	ELECT 47uF 20% 25V
C775	1-162-970-11	s	CERAMIC, CHIP 0.01uF 10% 25V
C776	1-162-970-11	s	CERAMIC, CHIP 0.01uF 10% 25V
C777	1-162-970-11	s	CERAMIC, CHIP 0.01uF 10% 25V
C778	1-162-970-11	s	CERAMIC, CHIP 0.01uF 10% 25V
C803	1-162-916-11	s	CERAMIC, CHIP 12PF 5% 50V
C901	1-164-232-11	s	CERAMIC, CHIP 0.01MF 10% 50V
CN605	1-573-782-21	o	CONNECTOR, PHEC 60P, MALE
CN606	1-573-782-21	o	CONNECTOR, PHEC 60P, MALE
D1	8-719-941-86	s	DIODE DAN202U
D3	8-719-941-86	s	DIODE DAN202U
D4	8-719-941-86	s	DIODE DAN202U
D700	8-719-941-86	s	DIODE DAN202U
D701	8-719-941-86	s	DIODE DAN202U
D702	8-719-800-76	s	DIODE 1SS226
D703	8-719-941-87	s	DIODE DAN202UT106
D704	8-719-941-87	s	DIODE DAN202UT106
DL1	1-415-403-21	s	DELAY LINE 1uS
FL1	1-235-779-11	s	FILTER, LOW-PASS
FL2	1-236-716-11	s	FILTER, LOW-PASS
FL3	1-236-563-11	s	FILTER, BANDPASS 3.58MHz
FL4	1-567-306-11	s	RESONATOR, CERAMIC
FL5	1-236-146-11	s	FILTER, BAND PASS 3.68MHz
IC1	8-759-239-34	s	IC TC74HC4538AF
IC2	8-759-710-86	s	IC NJM2233BM-T1
IC3	8-759-710-86	s	IC NJM2233BM-T1
IC4	8-759-710-86	s	IC NJM2233BM-T1
IC5	8-759-710-86	s	IC NJM2233BM-T1
IC6	8-759-710-86	s	IC NJM2233BM-T1
IC7	8-752-337-04	s	IC CXD1176Q
IC8	8-752-342-61	s	IC CXD2105AQ
IC9	8-752-054-62	s	IC CXA1207AR
IC10	8-752-051-40	s	IC CXA1208R
IC11	8-759-708-05	s	IC NJM78L05A
IC700	8-759-239-34	s	IC TC74HC4538AF
IC701	8-759-710-86	s	IC NJM2233BM-T1
IC702	8-759-700-43	s	IC NJM4558M
L1	1-408-785-21	s	INDUCTOR, CHIP 47UH
L2	1-408-785-21	s	INDUCTOR, CHIP 47UH
L3	1-408-785-21	s	INDUCTOR, CHIP 47UH
L4	1-408-785-21	s	INDUCTOR, CHIP 47UH
L5	1-408-785-21	s	INDUCTOR, CHIP 47UH
L10	1-408-785-21	s	INDUCTOR, CHIP 47UH
L11	1-408-785-21	s	INDUCTOR, CHIP 47UH
L12	1-410-388-21	s	INDUCTOR, CHIP 39uH
L13	1-408-785-21	s	INDUCTOR, CHIP 47UH
L14	1-408-785-21	s	INDUCTOR, CHIP 47UH
L15	1-410-383-31	s	INDUCTOR, CHIP 15uH
L16	1-408-785-21	s	INDUCTOR, CHIP 47UH
L17	1-408-785-21	s	INDUCTOR, CHIP 47UH
L18	1-408-785-21	s	INDUCTOR, CHIP 47UH
L19	1-408-785-21	s	INDUCTOR, CHIP 47UH
L20	1-408-785-21	s	INDUCTOR, CHIP 47UH
L21	1-408-785-21	s	INDUCTOR, CHIP 47UH
L22	1-408-785-21	s	INDUCTOR, CHIP 47UH

(MD-81 BOARD : 10341 and higher)

Ref. No. or Q'ty	Part No.	SP	Description
L23	1-408-785-21	s	INDUCTOR, CHIP 47UH
L24	1-410-393-11	s	INDUCTOR, CHIP 100UH
L25	1-410-385-11	s	INDUCTOR, CHIP 22uH
L26	1-408-785-21	s	INDUCTOR, CHIP 47UH
L27	1-410-391-11	s	INDUCTOR, CHIP 68uH
L28	1-410-386-11	s	INDUCTOR, CHIP 27uH
L29	1-410-391-11	s	INDUCTOR, CHIP 68uH
L30	1-408-785-21	s	INDUCTOR, CHIP 47UH
L45	1-408-785-21	s	INDUCTOR, CHIP 47UH
L502	1-408-408-00	s	INDUCTOR, CHIP 820UH
L503	1-408-427-00	s	INDUCTOR, CHIP 3300UH
L504	1-410-482-11	s	INDUCTOR, CHIP 100UH
L522	1-408-423-00	s	INDUCTOR, CHIP 1500UH
L523	1-408-225-00	s	INDUCTOR, CHIP 220UH
L719	1-412-280-31	s	INDUCTOR, CHIP 330UH
L719	1-412-280-31	s	INDUCTOR, CHIP 330UH
L47	1-410-386-11	s	INDUCTOR, CHIP 27uH
L527	1-408-785-21	s	INDUCTOR, CHIP 47UH
L700	1-408-785-21	s	INDUCTOR, CHIP 47UH
L701	1-408-785-21	s	INDUCTOR, CHIP 47UH
L702	1-408-785-21	s	INDUCTOR, CHIP 47UH
L703	1-410-382-31	s	INDUCTOR, CHIP 12uH
L704	1-410-379-31	s	INDUCTOR, CHIP 6.8UH
L705	1-410-382-31	s	INDUCTOR, CHIP 12uH
L706	1-410-379-31	s	INDUCTOR, CHIP 6.8UH
L707	1-408-785-21	s	INDUCTOR, CHIP 47UH
L708	1-408-785-21	s	INDUCTOR, CHIP 47UH
L709	1-410-391-11	s	INDUCTOR, CHIP 68uH
L710	1-410-387-11	s	INDUCTOR, CHIP 33uH
L713	1-408-785-21	s	INDUCTOR, CHIP 47UH
L714	1-408-785-21	s	INDUCTOR, CHIP 47UH
L715	1-408-785-21	s	INDUCTOR, CHIP 47UH
L716	1-408-785-21	s	INDUCTOR, CHIP 47UH
L720	1-410-392-11	s	INDUCTOR, CHIP 82UH
L801	1-408-785-21	s	INDUCTOR, CHIP 47UH
Q1	8-729-120-28	s	TRANSISTOR 2SC1623-L5L6
Q2	8-729-120-28	s	TRANSISTOR 2SC1623-L5L6
Q3	8-729-120-28	s	TRANSISTOR 2SC1623-L5L6
Q4	8-729-120-28	s	TRANSISTOR 2SC1623-L5L6
Q5	8-729-120-28	s	TRANSISTOR 2SC1623-L5L6
Q6	8-729-905-18	s	TRANSISTOR DTC144EU
Q7	8-729-905-18	s	TRANSISTOR DTC144EU
Q8	8-729-120-28	s	TRANSISTOR 2SC1623-L5L6
Q9	8-729-120-28	s	TRANSISTOR 2SC1623-L5L6
Q10	8-729-120-28	s	TRANSISTOR 2SC1623-L5L6
Q11	8-729-120-28	s	TRANSISTOR 2SC1623-L5L6
Q12	8-729-120-28	s	TRANSISTOR 2SC1623-L5L6
Q13	8-729-120-28	s	TRANSISTOR 2SC1623-L5L6
Q14	8-729-120-28	s	TRANSISTOR 2SC1623-L5L6
Q17	8-729-120-28	s	TRANSISTOR 2SC1623-L5L6
Q18	8-729-120-28	s	TRANSISTOR 2SC1623-L5L6
Q19	8-729-120-28	s	TRANSISTOR 2SC1623-L5L6
Q20	8-729-120-28	s	TRANSISTOR 2SC1623-L5L6
Q21	8-729-120-28	s	TRANSISTOR 2SC1623-L5L6
Q22	8-729-120-28	s	TRANSISTOR 2SC1623-L5L6
Q23	8-729-120-28	s	TRANSISTOR 2SC1623-L5L6
Q24	8-729-120-28	s	TRANSISTOR 2SC1623-L5L6
Q25	8-729-120-28	s	TRANSISTOR 2SC1623-L5L6
Q26	8-729-120-28	s	TRANSISTOR 2SC1623-L5L6

(MD-81 BOARD : 10341 and higher)

Ref. No. or Q'ty	Part No.	SP	Description
Q27	8-729-120-28	s	TRANSISTOR 2SC1623-L5L6
Q28	8-729-120-28	s	TRANSISTOR 2SC1623-L5L6
Q29	8-729-905-12	s	TRANSISTOR DTA144EU
Q30	8-729-905-18	s	TRANSISTOR DTC144EU
Q31	8-729-905-12	s	TRANSISTOR DTA144EU
Q32	8-729-905-18	s	TRANSISTOR DTC144EU
Q33	8-729-905-12	s	TRANSISTOR DTA144EU
Q34	8-729-905-18	s	TRANSISTOR DTC144EU
Q35	8-729-120-28	s	TRANSISTOR 2SC1623-L5L6
Q36	8-729-905-12	s	TRANSISTOR DTA144EU
Q38	8-729-905-12	s	TRANSISTOR DTA144EU
Q39	8-729-120-28	s	TRANSISTOR 2SC1623-L5L6
Q40	8-729-905-23	s	TRANSISTOR 2SA1576-R
Q41	8-729-120-28	s	TRANSISTOR 2SC1623-L5L6
Q42	8-729-120-28	s	TRANSISTOR 2SC1623-L5L6
Q45	8-729-120-28	s	TRANSISTOR 2SC1623-L5L6
Q46	8-729-120-28	s	TRANSISTOR 2SC1623-L5L6
Q47	8-729-905-23	s	TRANSISTOR 2SA1576-R
Q48	8-729-905-23	s	TRANSISTOR 2SA1576-R
Q51	8-729-905-23	s	TRANSISTOR 2SA1576-R
Q52	8-729-905-18	s	TRANSISTOR DTC144EU
Q53	8-729-905-12	s	TRANSISTOR DTA144EU
Q54	8-729-905-18	s	TRANSISTOR DTC144EU
Q55	8-729-905-18	s	TRANSISTOR DTC144EU
Q56	8-729-905-18	s	TRANSISTOR DTC144EU
Q57	8-729-202-38	s	TRANSISTOR 2SC3326N
Q58	8-729-202-38	s	TRANSISTOR 2SC3326N
Q79	8-729-117-16	s	TRANSISTOR 2SA1611-M6
Q80	8-729-905-12	s	TRANSISTOR DTA144EU
Q81	8-729-120-28	s	TRANSISTOR 2SC1623-L5L6
Q82	8-729-120-28	s	TRANSISTOR 2SC1623-L5L6
Q83	8-729-120-28	s	TRANSISTOR 2SC1623-L5L6
Q84	8-729-901-81	s	TRANSISTOR 2SC2412K-T-146-R
Q85	8-729-905-18	s	TRANSISTOR DTC144EU
Q86	8-729-905-18	s	TRANSISTOR DTC144EU
Q87	8-729-120-28	s	TRANSISTOR 2SC1623-L5L6
Q88	8-729-120-28	s	TRANSISTOR 2SC1623-L5L6
Q91	8-729-120-28	s	TRANSISTOR 2SC1623-L5L6
Q92	8-729-120-28	s	TRANSISTOR 2SC1623-L5L6
Q93	8-729-120-28	s	TRANSISTOR 2SC1623-L5L6
Q94	8-729-120-28	s	TRANSISTOR 2SC1623-L5L6
Q95	8-729-905-23	s	TRANSISTOR 2SA1576-R
Q509	8-729-901-81	s	TRANSISTOR 2SC2412K-T-146-R
Q510	8-729-901-81	s	TRANSISTOR 2SC2412K-T-146-R
Q511	8-729-901-81	s	TRANSISTOR 2SC2412K-T-146-R
Q513	8-729-901-81	s	TRANSISTOR 2SC2412K-T-146-R
Q515	8-729-901-81	s	TRANSISTOR 2SC2412K-T-146-R
Q516	8-729-901-81	s	TRANSISTOR 2SC2412K-T-146-R
Q539	8-729-905-18	s	TRANSISTOR DTC144EU
Q540	8-729-901-81	s	TRANSISTOR 2SC2412K-T-146-R
Q541	8-729-905-18	s	TRANSISTOR DTC144EU
Q700	8-729-905-12	s	TRANSISTOR DTA144EU
Q701	8-729-905-23	s	TRANSISTOR 2SA1576-R
Q702	8-729-120-28	s	TRANSISTOR 2SC1623-L5L6
Q703	8-729-120-28	s	TRANSISTOR 2SC1623-L5L6
Q704	8-729-905-23	s	TRANSISTOR 2SA1576-R
Q706	8-729-120-28	s	TRANSISTOR 2SC1623-L5L6
Q707	8-729-120-28	s	TRANSISTOR 2SC1623-L5L6
Q708	8-729-905-23	s	TRANSISTOR 2SA1576-R

(MD-81 BOARD : 10341 and higher)

Ref. No. or Q'ty	Part No.	SP	Description
Q709	8-729-120-28	s	TRANSISTOR 2SC1623-L5L6
Q710	8-729-120-28	s	TRANSISTOR 2SC1623-L5L6
Q711	8-729-905-18	s	TRANSISTOR DTC144EU
Q712	8-729-905-12	s	TRANSISTOR DTA144EU
Q716	8-729-120-28	s	TRANSISTOR 2SC1623-L5L6
Q717	8-729-905-23	s	TRANSISTOR 2SA1576-R
Q718	8-729-120-28	s	TRANSISTOR 2SC1623-L5L6
Q719	8-729-905-23	s	TRANSISTOR 2SA1576-R
Q720	8-729-120-28	s	TRANSISTOR 2SC1623-L5L6
Q721	8-729-202-38	s	TRANSISTOR 2SC3326N
Q722	8-729-202-38	s	TRANSISTOR 2SC3326N
Q723	8-729-120-28	s	TRANSISTOR 2SC1623-L5L6
Q724	8-729-120-28	s	TRANSISTOR 2SC1623-L5L6
Q725	8-729-202-38	s	TRANSISTOR 2SC3326N
Q726	8-729-202-38	s	TRANSISTOR 2SC3326N
Q727	8-729-120-28	s	TRANSISTOR 2SC1623-L5L6
Q728	8-729-120-28	s	TRANSISTOR 2SC1623-L5L6
Q729	8-729-120-28	s	TRANSISTOR 2SC1623-L5L6
Q731	8-729-120-28	s	TRANSISTOR 2SC1623-L5L6
Q732	8-729-905-23	s	TRANSISTOR 2SA1576-R
Q733	8-729-120-28	s	TRANSISTOR 2SC1623-L5L6
Q734	8-729-202-38	s	TRANSISTOR 2SC3326N
Q735	8-729-202-38	s	TRANSISTOR 2SC3326N
Q736	8-729-120-28	s	TRANSISTOR 2SC1623-L5L6
Q737	8-729-905-12	s	TRANSISTOR DTA144EU
Q750	8-729-905-12	s	TRANSISTOR DTA144EU
Q751	8-729-905-12	s	TRANSISTOR DTA144EU
Q752	8-729-905-12	s	TRANSISTOR DTA144EU
Q753	8-729-905-28	s	TRANSISTOR DTC2SA1576T106S
Q754	8-729-905-18	s	TRANSISTOR DTC144EU
Q755	8-729-905-18	s	TRANSISTOR DTC144EU
Q756	8-729-905-18	s	TRANSISTOR DTC144EU
Q757	8-729-905-18	s	TRANSISTOR DTC144EU
Q801	8-729-905-18	s	TRANSISTOR DTC144EU
Q902	8-729-202-38	s	TRANSISTOR 2SC3326N-A
Q903	8-729-202-38	s	TRANSISTOR 2SC3326N-A
R1	1-216-833-11	s	METAL, CHIP 10K 5% 1/16W
R2	1-216-823-11	s	METAL, CHIP 1.5K 5% 1/16W
R3	1-216-809-11	s	METAL, CHIP 100 5% 1/16W
R4	1-216-821-11	s	METAL, CHIP 1K 5% 1/16W
R5	1-216-823-11	s	METAL, CHIP 1.5K 5% 1/16W
R6	1-216-825-11	s	METAL, CHIP 2.2K 5% 1/16W
R7	1-216-809-11	s	METAL, CHIP 100 5% 1/16W
R8	1-216-809-11	s	METAL, CHIP 100 5% 1/16W
R9	1-216-825-11	s	METAL, CHIP 2.2K 5% 1/16W
R10	1-216-837-11	s	METAL, CHIP 22K 5% 1/16W
R11	1-216-837-11	s	METAL, CHIP 22K 5% 1/16W
R12	1-216-833-11	s	METAL, CHIP 10K 5% 1/16W
R13	1-218-716-11	s	METAL, CHIP 10K 0.50% 1/16W
R14	1-216-809-11	s	METAL, CHIP 100 5% 1/16W
R15	1-216-833-11	s	METAL, CHIP 10K 5% 1/16W
R16	1-216-833-11	s	METAL, CHIP 10K 5% 1/16W
R17	1-216-821-11	s	METAL, CHIP 1K 5% 1/16W
R18	1-216-821-11	s	METAL, CHIP 1K 5% 1/16W
R19	1-216-849-11	s	METAL, CHIP 220K 5% 1/16W
R21	1-216-825-11	s	METAL, CHIP 2.2K 5% 1/16W
R23	1-216-821-11	s	METAL, CHIP 1K 5% 1/16W
R24	1-216-821-11	s	METAL, CHIP 1K 5% 1/16W

(MD-81 BOARD : 10341 and higher)

Ref. No. or Q'ty	Part No.	SP	Description
R25	1-216-823-11	s	METAL, CHIP 1.5K 5% 1/16W
R26	1-218-682-11	s	METAL, CHIP 390 5% 1/16W
R27	1-216-823-11	s	METAL, CHIP 1.5K 5% 1/16W
R28	1-216-833-11	s	METAL, CHIP 10K 5% 1/16W
R29	1-216-837-11	s	METAL, CHIP 22K 5% 1/16W
R31	1-216-825-11	s	METAL, CHIP 2.2K 5% 1/16W
R32	1-216-821-11	s	METAL, CHIP 1K 5% 1/16W
R33	1-216-821-11	s	METAL, CHIP 1K 5% 1/16W
R34	1-218-706-11	s	METAL, CHIP 3.9K 0.50% 1/16W
R35	1-216-825-11	s	METAL, CHIP 2.2K 5% 1/16W
R36	1-216-821-11	s	METAL, CHIP 1K 5% 1/16W
R37	1-216-817-11	s	METAL, CHIP 470 5% 1/16W
R38	1-216-823-11	s	METAL, CHIP 1.5K 5% 1/16W
R39	1-216-821-11	s	METAL, CHIP 1K 5% 1/16W
R40	1-216-833-11	s	METAL, CHIP 10K 5% 1/16W
R41	1-216-797-11	s	METAL, CHIP 10% 1/16W
R42	1-218-663-91	s	METAL, CHIP 62 0.50% 1/16W
R43	1-218-671-11	s	METAL, CHIP 130 0.50% 1/16W
R45	1-216-845-11	s	METAL, CHIP 100K 5% 1/16W
R50	1-218-288-11	s	METAL, CHIP 300 5% 1/16W
R52	1-218-288-11	s	METAL, CHIP 300 5% 1/16W
R53	1-216-821-11	s	METAL, CHIP 1K 5% 1/16W
R55	1-218-701-11	s	METAL, CHIP 2.4K 0.50% 1/16W
R56	1-216-821-11	s	METAL, CHIP 1K 5% 1/16W
R57	1-216-821-11	s	METAL, CHIP 1K 5% 1/16W
R58	1-218-701-11	s	METAL, CHIP 2.4K 0.50% 1/16W
R59	1-216-825-11	s	METAL, CHIP 2.2K 5% 1/16W
R60	1-216-821-11	s	METAL, CHIP 1K 5% 1/16W
R61	1-216-821-11	s	METAL, CHIP 1K 5% 1/16W
R62	1-216-821-11	s	METAL, CHIP 1K 5% 1/16W
R63	1-216-821-11	s	METAL, CHIP 1K 5% 1/16W
R64	1-216-821-11	s	METAL, CHIP 1K 5% 1/16W
R65	1-216-820-11	s	METAL, CHIP 820 5% 1/16W
R66	1-216-817-11	s	METAL, CHIP 470 5% 1/16W
R67	1-216-825-11	s	METAL, CHIP 2.2K 5% 1/16W
R73	1-216-833-11	s	METAL, CHIP 10K 5% 1/16W
R74	1-216-821-11	s	METAL, CHIP 1K 5% 1/16W
R75	1-218-345-11	s	METAL, CHIP 9.1K 5% 1/16W
R76	1-218-289-11	s	METAL, CHIP 510 5% 1/16W
R77	1-218-289-11	s	METAL, CHIP 510 5% 1/16W
R78	1-216-833-11	s	METAL, CHIP 10K 5% 1/16W
R79	1-216-823-11	s	METAL, CHIP 1.5K 5% 1/16W
R80	1-218-484-11	s	METAL, CHIP 750 5% 1/16W
R82	1-216-821-11	s	METAL, CHIP 1K 5% 1/16W
R83	1-216-823-11	s	METAL, CHIP 1.5K 5% 1/16W
R84	1-216-825-11	s	METAL, CHIP 2.2K 5% 1/16W
R89	1-216-821-11	s	METAL, CHIP 1K 5% 1/16W
R90	1-216-809-11	s	METAL, CHIP 100 5% 1/16W
R91	1-216-821-11	s	METAL, CHIP 1K 5% 1/16W
R92	1-218-738-11	s	METAL, CHIP 82K 0.5% 1/16W
R93	1-216-813-11	s	METAL, CHIP 220 5% 1/16W
R94	1-218-705-11	s	METAL, CHIP 3.6K 0.50% 1/16W
R95	1-218-705-11	s	METAL, CHIP 3.6K 0.50% 1/16W
R96	1-216-809-11	s	METAL, CHIP 100 5% 1/16W
R97	1-216-813-11	s	METAL, CHIP 220 5% 1/16W
R98	1-216-825-11	s	METAL, CHIP 2.2K 5% 1/16W
R99	1-216-839-11	s	METAL, CHIP 33K 5% 1/16W
R100	1-216-842-11	s	METAL, CHIP 56K 5% 1/16W
R101	1-218-708-11	s	METAL, CHIP 4.7K 0.50% 1/16W

(MD-81 BOARD : 10341 and higher)

Ref. No. or Q'ty	Part No.	SP	Description
R102	1-216-857-11	s	METAL, CHIP 1M 5% 1/16W
R103	1-216-814-11	s	METAL, CHIP 270 5% 1/16W
R104	1-216-864-11	s	METAL, CHIP 0 5% 1/16W
R105	1-218-700-11	s	METAL, CHIP 2.2K 0.50% 1/16W
R106	1-216-837-11	s	METAL, CHIP 22K 5% 1/16W
R107	1-216-837-11	s	METAL, CHIP 22K 5% 1/16W
R108	1-216-821-11	s	METAL, CHIP 1K 5% 1/16W
R109	1-216-815-11	s	METAL, CHIP 330 5% 1/16W
R110	1-216-815-11	s	METAL, CHIP 330 5% 1/16W
R111	1-216-815-11	s	METAL, CHIP 330 5% 1/16W
R112	1-218-740-11	s	METAL, CHIP 100K 0.50% 1/16W
R113	1-216-803-11	s	METAL, CHIP 33 5% 1/16W
R114	1-216-805-11	s	METAL, CHIP 47 5% 1/16W
R115	1-216-815-11	s	METAL, CHIP 330 5% 1/16W
R117	1-216-831-11	s	METAL, CHIP 6.8K 5% 1/16W
R118	1-216-837-11	s	METAL, CHIP 22K 5% 1/16W
R119	1-216-833-11	s	METAL, CHIP 10K 5% 1/16W
R120	1-216-841-11	s	METAL, CHIP 47K 5% 1/16W
R121	1-216-834-11	s	METAL, CHIP 12K 5% 1/16W
R122	1-216-833-11	s	METAL, CHIP 10K 5% 1/16W
R123	1-216-836-11	s	METAL, CHIP 18K 5% 1/16W
R124	1-216-833-11	s	METAL, CHIP 10K 5% 1/16W
R125	1-218-295-11	s	METAL, CHIP 4.3K 5% 1/16W
R126	1-216-832-11	s	METAL, CHIP 8.2K 5% 1/16W
R127	1-216-827-11	s	METAL, CHIP 3.3K 5% 1/16W
R130	1-216-825-11	s	METAL, CHIP 2.2K 5% 1/16W
R131	1-216-822-11	s	METAL, CHIP 1.2K 5% 1/16W
R132	1-218-704-11	s	METAL, CHIP 3.3K 0.50% 1/16W
R133	1-216-841-11	s	METAL, CHIP 47K 5% 1/16W
R134	1-216-841-11	s	METAL, CHIP 47K 5% 1/16W
R135	1-216-841-11	s	METAL, CHIP 47K 5% 1/16W
R137	1-216-837-11	s	METAL, CHIP 22K 5% 1/16W
R138	1-216-864-11	s	METAL, CHIP 0 5% 1/16W
R139	1-216-833-11	s	METAL, CHIP 10K 5% 1/16W
R140	1-216-864-11	s	METAL, CHIP 0 5% 1/16W
R141	1-216-809-11	s	METAL, CHIP 100 5% 1/16W
R144	1-216-825-11	s	METAL, CHIP 2.2K 5% 1/16W
R145	1-218-740-11	s	METAL, CHIP 100K 0.50% 1/16W
R146	1-216-833-11	s	METAL, CHIP 10K 5% 1/16W
R147	1-216-833-11	s	METAL, CHIP 10K 5% 1/16W
R148	1-216-805-11	s	METAL, CHIP 47 5% 1/16W
R149	1-216-832-11	s	METAL, CHIP 8.2K 5% 1/16W
R150	1-216-832-11	s	METAL, CHIP 8.2K 5% 1/16W
R152	1-216-821-11	s	METAL, CHIP 1K 5% 1/16W
R153	1-218-295-11	s	METAL, CHIP 4.3K 5% 1/16W
R154	1-216-795-11	s	METAL, CHIP 6.8K 0.50% 1/16W
R155	1-216-803-11	s	METAL, CHIP 33 5% 1/16W
R156	1-216-825-11	s	METAL, CHIP 2.2K 5% 1/16W
R157	1-216-829-11	s	METAL, CHIP 4.7K 5% 1/16W
R159	1-216-817-11	s	METAL, CHIP 470 5% 1/16W
R160	1-216-817-11	s	METAL, CHIP 470 5% 1/16W
R161	1-216-837-11	s	METAL, CHIP 22K 5% 1/16W
R167	1-216-821-11	s	METAL, CHIP 1K 5% 1/16W
R168	1-218-457-11	s	METAL, CHIP 910 5% 1/16W
R169	1-218-482-11	s	METAL, CHIP 430 5% 1/16W
R171	1-216-864-11	s	METAL, CHIP 0 5% 1/16W
R172	1-216-821-11	s	METAL, CHIP 1K 5% 1/16W
R173	1-218-668-11	s	METAL, CHIP 100 0.50% 1/16W
R175	1-216-817-11	s	METAL, CHIP 470 5% 1/16W

(MD-81 BOARD : 10341 and higher)

Ref. No. or Q'ty	Part No.	SP	Description
R176	1-216-823-11	s	METAL, CHIP 1.5K 5% 1/16W
R179	1-216-827-11	s	METAL, CHIP 3.3K 5% 1/16W
R180	1-216-841-11	s	METAL, CHIP 47K 5% 1/16W
R181	1-218-708-11	s	METAL, CHIP 4.7K 0.50% 1/16W
R182	1-218-706-11	s	METAL, CHIP 3.9K 0.50% 1/16W
R184	1-218-744-11	s	METAL, CHIP 150K 0.50% 1/16W
R185	1-216-846-11	s	METAL, CHIP 120K 5% 1/16W
R187	1-216-837-11	s	METAL, CHIP 22K 5% 1/16W
R188	1-218-748-11	s	METAL, CHIP 220K 0.50% 1/16W
R189	1-218-704-11	s	METAL, CHIP 3.3K 0.50% 1/16W
R190	1-218-708-11	s	METAL, CHIP 4.7K 0.50% 1/16W
R191	1-218-671-11	s	METAL, CHIP 130 0.50% 1/16W
R192	1-216-837-11	s	METAL, CHIP 22K 5% 1/16W
R193	1-216-841-11	s	METAL, CHIP 47K 5% 1/16W
R194	1-216-841-11	s	METAL, CHIP 47K 5% 1/16W
R195	1-216-841-11	s	METAL, CHIP 47K 5% 1/16W
R196	1-216-816-11	s	METAL, CHIP 390 5% 1/16W
R197	1-216-817-11	s	METAL, CHIP 470 5% 1/16W
R198	1-216-841-11	s	METAL, CHIP 47K 5% 1/16W
R199	1-216-841-11	s	METAL, CHIP 47K 5% 1/16W
R200	1-216-841-11	s	METAL, CHIP 47K 5% 1/16W
R239	1-218-289-11	s	METAL, CHIP 510 5% 1/16W
R251	1-216-821-11	s	METAL, CHIP 1K 5% 1/16W
R252	1-216-821-11	s	METAL, CHIP 1K 5% 1/16W
R254	1-216-821-11	s	METAL, CHIP 1K 5% 1/16W
R258	1-216-810-11	s	METAL, CHIP 120 5% 1/16W
R267	1-216-819-11	s	METAL, CHIP 680 5% 1/16W
R272	1-216-821-11	s	METAL, CHIP 1K 5% 1/16W
R274	1-216-809-11	s	METAL, CHIP 100 5% 1/16W
R275	1-216-809-11	s	METAL, CHIP 100 5% 1/16W
R277	1-216-821-11	s	METAL, CHIP 1K 5% 1/16W
R278	1-216-825-11	s	METAL, CHIP 2.2K 5% 1/16W
R279	1-218-705-11	s	METAL, CHIP 3.6K 0.50% 1/16W
R280	1-216-821-11	s	METAL, CHIP 1K 5% 1/16W
R281	1-216-820-11	s	METAL, CHIP 820 5% 1/16W
R282	1-216-809-11	s	METAL, CHIP 100 5% 1/16W
R283	1-216-825-11	s	METAL, CHIP 2.2K 5% 1/16W
R284	1-218-688-11	s	METAL, CHIP 680 0.50% 1/16W
R285	1-216-694-11	s	METAL, CHIP 1.2K 0.50% 1/16W
R286	1-216-817-11	s	METAL, CHIP 470 5% 1/16W
R287	1-216-836-11	s	METAL, CHIP 18K 5% 1/16W
R288	1-216-833-11	s	METAL, CHIP 10K 5% 1/16W
R289	1-216-817-11	s	METAL, CHIP 470 5% 1/16W
R290	1-216-837-11	s	METAL, CHIP 22K 5% 1/16W
R291	1-216-837-11	s	METAL, CHIP 22K 5% 1/16W
R292	1-216-837-11	s	METAL, CHIP 22K 5% 1/16W
R293	1-216-821-11	s	METAL, CHIP 1K 5% 1/16W
R294	1-216-837-11	s	METAL, CHIP 22K 5% 1/16W
R295	1-216-837-11	s	METAL, CHIP 22K 5% 1/16W
R296	1-216-821-11	s	METAL, CHIP 1K 5% 1/16W
R305	1-216-409-11	s	METAL, CHIP 330 1% 1/4W
R306	1-216-864-11	s	METAL, CHIP 0 5% 1/16W
R307	1-216-864-11	s	METAL, CHIP 0 5% 1/16W
R308	1-216-864-11	s	METAL, CHIP 0 5% 1/16W
R309	1-216-864-11	s	METAL, CHIP 0 5% 1/16W
R311	1-216-864-11	s	METAL, CHIP 0 5% 1/16W
R312	1-216-864-11	s	METAL, CHIP 0 5% 1/16W
R313	1-216-864-11	s	METAL, CHIP 0 5% 1/16W
R314	1-216-864-11	s	METAL, CHIP 0 5% 1/16W

(MD-81 BOARD : 10341 and higher)

Ref. No. or Q'ty	Part No.	SP	Description
R315	1-216-864-11	s	METAL, CHIP 0 5% 1/16W
R319	1-216-864-11	s	METAL, CHIP 0 5% 1/16W
R320	1-216-864-11	s	METAL, CHIP 0 5% 1/16W
R321	1-216-864-11	s	METAL, CHIP 0 5% 1/16W
R322	1-216-864-11	s	METAL, CHIP 0 5% 1/16W
R323	1-216-864-11	s	METAL, CHIP 0 5% 1/16W
R324	1-216-864-11	s	METAL, CHIP 0 5% 1/16W
R325	1-216-864-11	s	METAL, CHIP 0 5% 1/16W
R326	1-216-864-11	s	METAL, CHIP 0 5% 1/16W
R327	1-216-864-11	s	METAL, CHIP 0 5% 1/16W
R328	1-216-864-11	s	METAL, CHIP 0 5% 1/16W
R331	1-218-482-11	s	METAL, CHIP 430 5% 1/16W
R334	1-216-838-11	s	METAL, CHIP 27K 5% 1/16W
R335	1-216-817-11	s	METAL, CHIP 470 5% 1/16W
R336	1-218-729-11	s	METAL, CHIP 36K 0.50% 1/16W
R340	1-216-838-11	s	METAL, CHIP 27K 5% 1/16W
R341	1-216-864-11	s	METAL, CHIP 0 5% 1/16W
R342	1-216-851-11	s	METAL, CHIP 330K 5% 1/16W
R343	1-216-821-11	s	METAL, CHIP 1K 5% 1/16W
R344	1-216-829-11	s	METAL, CHIP 4.7K 5% 1/16W
R345	1-216-809-11	s	METAL, CHIP 100 5% 1/16W
R348	1-216-823-11	s	METAL, CHIP 1.5K 5% 1/16W
R350	1-216-821-11	s	METAL, CHIP 1K 5% 1/16W
R351	1-216-837-11	s	METAL, CHIP 22K 5% 1/16W
R352	1-216-837-11	s	METAL, CHIP 22K 5% 1/16W
R353	1-216-825-11	s	METAL, CHIP 2.2K 5% 1/16W
R354	1-218-727-11	s	METAL, CHIP 30K 0.50% 1/16W
R355	1-218-706-11	s	METAL, CHIP 3.9K 0.50% 1/16W
R360	1-216-864-11	s	METAL, CHIP 0 5% 1/16W
R361	1-216-821-11	s	METAL, CHIP 1K 5% 1/16W
R364	1-216-825-11	s	METAL, CHIP 2.2K 5% 1/16W
R365	1-216-809-11	s	METAL, CHIP 100 5% 1/16W
R503	1-216-821-11	s	METAL, CHIP 1K 5% 1/16W
R518	1-216-837-11	s	METAL, CHIP 22K 5% 1/16W
R520	1-216-823-11	s	METAL, CHIP 1.5K 5% 1/16W
R522	1-218-686-11	s	METAL, CHIP 560 0.50% 1/16W
R523	1-218-668-11	s	METAL, CHIP 100 0.50% 1/16W
R524	1-216-817-11	s	METAL, CHIP 470 5% 1/16W
R527	1-216-833-11	s	METAL, CHIP 10K 5% 1/16W
R525	1-216-817-11	s	METAL, CHIP 470 5% 1/16W
R527	1-216-833-11	s	METAL, CHIP 10K 5% 1/16W
R531	1-216-801-11	s	METAL, CHIP 22 5% 1/16W
R532	1-216-795-11	s	METAL, CHIP 6.8K 0.50% 1/16W
R533	1-216-864-11	s	METAL, CHIP 0 5% 1/16W
R534	1-218-686-11	s	METAL, CHIP 560 0.50% 1/16W
R535	1-216-817-11	s	METAL, CHIP 470 5% 1/16W
R538	1-216-833-11	s	METAL, CHIP 10K 5% 1/16W
R539	1-216-833-11	s	METAL, CHIP 10K 5% 1/16W
R573	1-216-704-11	s	METAL, CHIP 3.3K 0 5% 1/16W
R610	1-216-831-11	s	METAL, CHIP 6.8K 5% 1/16W
R611	1-216-837-11	s	METAL, CHIP 22K 5% 1/16W
R612	1-216-837-11	s	METAL, CHIP 22K 5% 1/16W
R614	1-216-837-11	s	METAL, CHIP 22K 5% 1/16W
R615	1-216-704-11	s	METAL, CHIP 3.3K 0.50% 1/16W
R635	1-216-864-11	s	METAL, CHIP 0 5% 1/16W
R636	1-218-686-11	s	METAL, CHIP 560 0.50% 1/16W
R637	1-218-686-11	s	METAL, CHIP 560 0.50% 1/16W
R638	1-216-817-11	s	METAL, CHIP 470 5% 1/16W
R639	1-216-817-11	s	METAL, CHIP 470 5% 1/16W

(MD-81 BOARD : 10341 and higher)

Ref. No. or Q'ty	Part No.	SP	Description
R640	1-216-814-11	s	METAL, CHIP 270 5% 1/16W
R700	1-218-724-11	s	METAL, CHIP 22K 0.50% 1/16W
R701	1-216-826-11	s	METAL, CHIP 2.7K 5% 1/16W
R702	1-218-716-11	s	METAL, CHIP 10K 0.50% 1/16W
R703	1-216-821-11	s	METAL, CHIP 1K 5% 1/16W
R704	1-218-272-11	s	METAL, CHIP 5.1K 5% 1/16W
R705	1-218-883-11	s	METAL, CHIP 33K 0.50 1/16W
R706	1-216-825-11	s	METAL, CHIP 2.2K 5% 1/16W
R707	1-216-809-11	s	METAL, CHIP 100 5% 1/16W
R708	1-218-272-11	s	METAL, CHIP 5.1K 5% 1/16W
R709	1-216-809-11	s	METAL, CHIP 100 5% 1/16W
R710	1-216-826-11	s	METAL, CHIP 2.7K 5% 1/16W
R711	1-216-809-11	s	METAL, CHIP 100 5% 1/16W
R712	1-216-817-11	s	METAL, CHIP 470 5% 1/16W
R714	1-216-809-11	s	METAL, CHIP 100 5% 1/16W
R715	1-216-838-11	s	METAL, CHIP 27K 5% 1/16W
R716	1-216-837-11	s	METAL, CHIP 22K 5% 1/16W
R717	1-218-723-11	s	METAL, CHIP 20K 0.50% 1/16W
R718	1-216-817-11	s	METAL, CHIP 470 5% 1/16W
R719	1-216-817-11	s	METAL, CHIP 470 5% 1/16W
R720	1-218-482-11	s	METAL, CHIP 430 5% 1/16W
R721	1-216-825-11	s	METAL, CHIP 2.2K 5% 1/16W
R722	1-216-825-11	s	METAL, CHIP 2.2K 5% 1/16W
R723	1-216-825-11	s	METAL, CHIP 2.2K 5% 1/16W
R724	1-216-809-11	s	METAL, CHIP 100 5% 1/16W
R725	1-216-809-11	s	METAL, CHIP 100 5% 1/16W
R726	1-218-688-11	s	METAL, CHIP 680 0.50% 1/16W
R727	1-216-838-11	s	METAL, CHIP 27K 5% 1/16W
R728	1-216-826-11	s	METAL, CHIP 2.7K 5% 1/16W
R729	1-216-838-11	s	METAL, CHIP 27K 5% 1/16W
R730	1-216-837-11	s	METAL, CHIP 22K 5% 1/16W
R731	1-218-723-11	s	METAL, CHIP 20K 0.50% 1/16W
R732	1-216-817-11	s	METAL, CHIP 470 5% 1/16W
R733	1-216-817-11	s	METAL, CHIP 470 5% 1/16W
R734	1-218-482-11	s	METAL, CHIP 430 5% 1/16W
R735	1-216-825-11	s	METAL, CHIP 2.2K 5% 1/16W
R736	1-216-809-11	s	METAL, CHIP 100 5% 1/16W
R737	1-216-841-11	s	METAL, CHIP 47K 5% 1/16W
R738	1-216-833-11	s	METAL, CHIP 10K 5% 1/16W
R739	1-216-821-11	s	METAL, CHIP 1K 5% 1/16W
R740	1-216-821-11	s	METAL, CHIP 1K 5% 1/16W
R741	1-216-809-11	s	METAL, CHIP 100 5% 1/16W
R742	1-216-809-11	s	METAL, CHIP 100 5% 1/16W
R743	1-216-809-11	s	METAL, CHIP 100 5% 1/16W
R744	1-216-825-11	s	METAL, CHIP 2.2K 5% 1/16W
R745	1-216-833-11	s	METAL, CHIP 10K 5% 1/16W
R746	1-218-700-11	s	METAL, CHIP 2.2K 0.50% 1/16W
R747	1-216-809-11	s	METAL, CHIP 100 5% 1/16W
R749	1-218-698-11	s	METAL, CHIP 1.8K 0.50% 1/16W
R751	1-216-833-11	s	METAL, CHIP 10K 5% 1/16W
R752	1-216-833-11	s	METAL, CHIP 10K 5% 1/16W
R753	1-218-708-11	s	METAL, CHIP 4.7K 0.50% 1/16W
R754	1-218-705-11	s	METAL, CHIP 3.6K 0.50% 1/16W
R763	1-216-803-11	s	METAL, CHIP 33 5% 1/16W
R766	1-216-833-11	s	METAL, CHIP 10K 5% 1/16W
R768	1-216-806-11	s	METAL, CHIP 56 5% 1/16W
R769	1-216-809-11	s	METAL, CHIP 100 5% 1/16W
R771	1-216-838-11	s	METAL, CHIP 27K 5% 1/16W
R772	1-216-837-11	s	METAL, CHIP 22K 5% 1/16W

(MD-81 BOARD : 10341 and higher)

Ref. No. or Q'ty	Part No.	SP	Description
R773	1-218-883-11	s	METAL, CHIP 33K 0.50 1/16W
R774	1-216-817-11	s	METAL, CHIP 470 5% 1/16W
R775	1-216-817-11	s	METAL, CHIP 470 5% 1/16W
R776	1-218-482-11	s	METAL, CHIP 430 5% 1/16W
R777	1-216-825-11	s	METAL, CHIP 2.2K 5% 1/16W
R779	1-216-864-11	s	METAL, CHIP 0 5% 1/16W
R780	1-218-700-11	s	METAL, CHIP 2.2K 0.50% 1/16W
R782	1-216-825-11	s	METAL, CHIP 2.2K 5% 1/16W
R784	1-218-289-11	s	METAL, CHIP 510 5% 1/16W
R785	1-216-817-11	s	METAL, CHIP 470 5% 1/16W
R786	1-216-841-11	s	METAL, CHIP 47K 5% 1/16W
R787	1-216-841-11	s	METAL, CHIP 47K 5% 1/16W
R788	1-216-825-11	s	METAL, CHIP 2.2K 5% 1/16W
R789	1-216-838-11	s	METAL, CHIP 27K 5% 1/16W
R790	1-216-837-11	s	METAL, CHIP 22K 5% 1/16W
R792	1-218-289-11	s	METAL, CHIP 510 5% 1/16W
R793	1-216-817-11	s	METAL, CHIP 470 5% 1/16W
R794	1-216-841-11	s	METAL, CHIP 47K 5% 1/16W
R795	1-216-841-11	s	METAL, CHIP 47K 5% 1/16W
R796	1-216-825-11	s	METAL, CHIP 2.2K 5% 1/16W
R797	1-216-809-11	s	METAL, CHIP 100 5% 1/16W
R798	1-216-823-11	s	METAL, CHIP 1.5K 5% 1/16W
R799	1-218-708-11	s	METAL, CHIP 4.7K 0.50% 1/16W
R800	1-218-313-11	s	METAL, CHIP 560 1% 1/16W
R801	1-218-700-11	s	METAL, CHIP 2.2K 0.50% 1/16W
R802	1-216-825-11	s	METAL, CHIP 2.2K 5% 1/16W
R803	1-218-331-11	s	METAL, CHIP 51 0.50% 1/16W
R804	1-216-838-11	s	METAL, CHIP 27K 5% 1/16W
R805	1-216-837-11	s	METAL, CHIP 22K 5% 1/16W
R807	1-216-864-11	s	METAL, CHIP 0 5% 1/16W
R808	1-216-821-11	s	METAL, CHIP 1K 5% 1/16W
R810	1-216-825-11	s	METAL, CHIP 2.2K 5% 1/16W
R812	1-218-289-11	s	METAL, CHIP 510 5% 1/16W
R813	1-216-817-11	s	METAL, CHIP 470 5% 1/16W
R814	1-216-841-11	s	METAL, CHIP 47K 5% 1/16W
R815	1-216-841-11	s	METAL, CHIP 47K 5% 1/16W
R816	1-218-695-11	s	METAL, CHIP 1.3K 0.50% 1/16W
R817	1-216-864-11	s	METAL, CHIP 0 5% 1/16W
R818	1-216-825-11	s	METAL, CHIP 2.2K 5% 1/16W
R819	1-216-864-11	s	METAL, CHIP 0 5% 1/16W
R820	1-216-841-11	s	METAL, CHIP 47K 5% 1/16W
R821	1-216-841-11	s	METAL, CHIP 47K 5% 1/16W
R822	1-216-841-11	s	METAL, CHIP 47K 5% 1/16W
R823	1-216-841-11	s	METAL, CHIP 47K 5% 1/16W
R824	1-216-837-11	s	METAL, CHIP 22K 5% 1/16W
R825	1-216-803-11	s	METAL, CHIP 33 5% 1/16W
R826	1-216-809-11	s	METAL, CHIP 100 5% 1/16W
R827	1-216-287-11	s	METAL, CHIP 3.3K 5% 1/16W
R828	1-216-809-11	s	METAL, CHIP 100 5% 1/16W
R829	1-216-809-11	s	METAL, CHIP 100 5% 1/16W
R833	1-216-817-11	s	METAL, CHIP 470 5% 1/16W
R850	1-216-813-11	s	METAL, CHIP 220 5% 1/16W
R851	1-216-813-11	s	METAL, CHIP 220 5% 1/16W
R852	1-216-813-11	s	METAL, CHIP 220 5% 1/16W
R854	1-216-825-11	s	METAL, CHIP 2.2K 5% 1/16W
R901	1-216-681-11	s	METAL, CHIP 18K 0.50% 1/16W
R902	1-216-089-11	s	METAL, CHIP 47K 5% 1/16W
RV1	1-238-798-11	s	RES, ADJ METAL 500

(MD-81 BOARD : 10341 and higher)

Ref. No. or Q'ty	Part No.	SP	Description
RV2	1-238-801-11	s	RES, ADJ METAL 5K
RV3	1-238-801-11	s	RES, ADJ METAL 5K
RV4	1-238-803-11	s	RES, ADJ METAL 20K
RV5	1-238-803-11	s	RES, ADJ METAL 20K
RV6	1-238-801-11	s	RES, ADJ METAL 5K
RV7	1-238-801-11	s	RES, ADJ METAL 5K
RV8	1-238-801-11	s	RES, ADJ METAL 5K
RV10	1-238-804-11	s	RES, ADJ METAL 50K
RV13	1-238-799-11	s	RES, ADJ METAL 1K
RV14	1-238-802-11	s	RES, ADJ METAL 10K
RV15	1-238-801-11	s	RES, ADJ METAL 5K
RV16	1-238-801-11	s	RES, ADJ METAL 5K
RV17	1-238-799-11	s	RES, ADJ METAL 1K
RV700	1-238-799-11	s	RES, ADJ METAL 1K
RV703	1-238-800-11	s	RES, ADJ METAL 2K
RV704	1-238-800-11	s	RES, ADJ METAL 2K
RV705	1-238-800-11	s	RES, ADJ METAL 2K
RV706	1-238-800-11	s	RES, ADJ METAL 2K
RV707	1-238-800-11	s	RES, ADJ METAL 2K
X1	1-577-080-11	s	CRYSTAL 3.579545Hz

MS-36 BOARD

Ref. No. or Q'ty	Part No.	SP	Description
1pc	A-7071-498-A	o	MOUNTED CIRCUIT BOARD, MS-36
1pc	1-163-038-11	s	CAP, CHIP CERAMIC 0.1MF 25V
1pc	1-506-485-11	o	PIN, CONNECTOR, 6P

MT-57A BOARD

Ref. No. or Q'ty	Part No.	SP	Description
1pc	A-8271-224-A	o	MOUNTED CIRCUIT BOARD, MT-57A
2pcs	1-520-506-11	s	METER, AUDIO LEVEL
2pcs	3-738-923-01	o	HOLDER, LED
CN802	1-506-483-21	s	CONNECTOR, 4P, MALE
D1	8-719-820-27	s	LED TLY-256, YELLOW
D2	8-719-820-27	s	LED TLY-256, YELLOW
D3	8-719-820-27	s	LED TLY-256, YELLOW
D4	8-719-820-27	s	LED TLY-256, YELLOW
R1	1-249-411-11	s	CARBON 330 5% 1/4W
R2	1-249-411-11	s	CARBON 330 5% 1/4W

PD-62 BOARD

Ref. No. or Q'ty	Part No.	SP	Description
1pc	A-8271-713-A	o	MOUNTED CIRCUIT BOARD, PD-62
C101	1-135-211-11	s	TANTALUM, CHIP 6.8uF 20% 6.3V
C102	1-163-035-00	s	CERAMIC, CHIP 0.047uF 50V
C103	1-135-211-11	s	TANTALUM, CHIP 6.8uF 20% 6.3V
C104	1-163-035-00	s	CERAMIC, CHIP 0.047uF 50V
C105	1-135-211-11	s	TANTALUM, CHIP 6.8uF 20% 6.3V
C106	1-163-035-00	s	CERAMIC, CHIP 0.047uF 50V
C107	1-135-211-11	s	TANTALUM, CHIP 6.8uF 20% 6.3V
C108	1-163-035-00	s	CERAMIC, CHIP 0.047uF 50V
C109	1-163-035-00	s	CERAMIC, CHIP 0.047uF 50V
C110	1-163-035-00	s	CERAMIC, CHIP 0.047uF 50V
C111	1-135-166-21	s	TANTALUM, CHIP 47uF 10% 10V
C112	1-163-035-00	s	CERAMIC, CHIP 0.047uF 50V
CN252	1-563-863-21	o	CONNECTOR, 26P, MALE
IC102	8-752-331-00	s	IC CXK5864BM-12L
IC103	8-752-331-00	s	IC CXK5864BM-12L
IC104	8-759-926-77	s	IC SN74HC541NS
IC105	8-759-926-77	s	IC SN74HC541NS
IC106	8-759-926-77	s	IC SN74HC541NS
L101	1-410-393-11	s	INDUCTOR, CHIP 100UH
L102	1-410-393-11	s	INDUCTOR, CHIP 100UH
L103	1-410-393-11	s	INDUCTOR, CHIP 100UH
L104	1-410-393-11	s	INDUCTOR, CHIP 100UH
R101	1-216-089-00	s	METAL, CHIP 47K 5% 1/10W
R102	1-216-089-00	s	METAL, CHIP 47K 5% 1/10W
R103	1-216-089-00	s	METAL, CHIP 47K 5% 1/10W
R104	1-216-089-00	s	METAL, CHIP 47K 5% 1/10W
R105	1-216-089-00	s	METAL, CHIP 47K 5% 1/10W
R106	1-216-089-00	s	METAL, CHIP 47K 5% 1/10W
R107	1-216-089-00	s	METAL, CHIP 47K 5% 1/10W
R108	1-216-089-00	s	METAL, CHIP 47K 5% 1/10W
R109	1-216-089-00	s	METAL, CHIP 47K 5% 1/10W
R110	1-216-089-00	s	METAL, CHIP 47K 5% 1/10W
R111	1-216-089-00	s	METAL, CHIP 47K 5% 1/10W
R112	1-216-089-00	s	METAL, CHIP 47K 5% 1/10W
R113	1-216-089-00	s	METAL, CHIP 47K 5% 1/10W
R114	1-216-089-00	s	METAL, CHIP 47K 5% 1/10W
R115	1-216-089-00	s	METAL, CHIP 47K 5% 1/10W
R116	1-216-089-00	s	METAL, CHIP 47K 5% 1/10W
R117	1-216-089-00	s	METAL, CHIP 47K 5% 1/10W
R118	1-216-089-00	s	METAL, CHIP 47K 5% 1/10W
R119	1-216-089-00	s	METAL, CHIP 47K 5% 1/10W
R120	1-216-089-00	s	METAL, CHIP 47K 5% 1/10W
R121	1-216-089-00	s	METAL, CHIP 47K 5% 1/10W
R122	1-216-089-00	s	METAL, CHIP 47K 5% 1/10W
R123	1-216-089-00	s	METAL, CHIP 47K 5% 1/10W

PRE-10 BOARD

Ref. No. or Q'ty	Part No.	SP	Description
1pc	A-8271-233-A	o	MOUNTED CIRCUIT BOARD, PRE-10
1pc	3-947-136-01	o	PLATE, SHIELD, RF
1pc	7-682-903-01	s	SCREW +PWH 3X5
C1	1-124-477-11	s	ELECT 47uF 20% 25V
C2	1-162-970-11	s	CERAMIC, CHIP 0.01uF 10% 25V
C3	1-162-970-11	s	CERAMIC, CHIP 0.01uF 10% 25V
C4	1-162-970-11	s	CERAMIC, CHIP 0.01uF 10% 25V
C5	1-162-970-11	s	CERAMIC, CHIP 0.01uF 10% 25V
C6	1-162-970-11	s	CERAMIC, CHIP 0.01uF 10% 25V
C7	1-162-970-11	s	CERAMIC, CHIP 0.01uF 10% 25V
C8	1-124-477-11	s	ELECT 47uF 20% 25V
C9	1-162-970-11	s	CERAMIC, CHIP 0.01uF 10% 25V
C11	1-162-970-11	s	CERAMIC, CHIP 0.01uF 10% 25V
C12	1-162-970-11	s	CERAMIC, CHIP 0.01uF 10% 25V
C13	1-162-970-11	s	CERAMIC, CHIP 0.01uF 10% 25V
C14	1-162-970-11	s	CERAMIC, CHIP 0.01uF 10% 25V
C15	1-124-477-11	s	ELECT 47uF 20% 25V
C16	1-162-970-11	s	CERAMIC, CHIP 0.01uF 10% 25V
C17	1-162-970-11	s	CERAMIC, CHIP 0.01uF 10% 25V
C18	1-162-970-11	s	CERAMIC, CHIP 0.01uF 10% 25V
C19	1-162-970-11	s	CERAMIC, CHIP 0.01uF 10% 25V
C20	1-162-970-11	s	CERAMIC, CHIP 0.01uF 10% 25V
C21	1-163-038-00	s	CERAMIC, CHIP 0.1uF 25V
C22	1-163-038-00	s	CERAMIC, CHIP 0.1uF 25V
C23	1-163-038-00	s	CERAMIC, CHIP 0.1uF 25V
C24	1-163-038-00	s	CERAMIC, CHIP 0.1uF 25V
C25	1-162-970-11	s	CERAMIC, CHIP 0.01uF 10% 25V
C27	1-163-038-00	s	CERAMIC, CHIP 0.1uF 25V
C28	1-162-970-11	s	CERAMIC, CHIP 0.01uF 10% 25V
C29	1-162-970-11	s	CERAMIC, CHIP 0.01uF 10% 25V
C30	1-162-970-11	s	CERAMIC, CHIP 0.01uF 10% 25V
C31	1-124-477-11	s	ELECT 47uF 20% 25V
C32	1-124-477-11	s	ELECT 47uF 20% 25V
C34	1-163-038-00	s	CERAMIC, CHIP 0.1uF 25V
C35	1-162-970-11	s	CERAMIC, CHIP 0.01uF 10% 25V
C36	1-162-970-11	s	CERAMIC, CHIP 0.01uF 10% 25V
C37	1-162-970-11	s	CERAMIC, CHIP 0.01uF 10% 25V
C38	1-124-477-11	s	ELECT 47uF 20% 25V
C39	1-124-477-11	s	ELECT 47uF 20% 25V
C40	1-124-477-11	s	ELECT 47uF 20% 25V
C41	1-162-970-11	s	CERAMIC, CHIP 0.01uF 10% 25V
C42	1-162-970-11	s	CERAMIC, CHIP 0.01uF 10% 25V
C43	1-162-970-11	s	CERAMIC, CHIP 0.01uF 10% 25V
C44	1-162-970-11	s	CERAMIC, CHIP 0.01uF 10% 25V
C45	1-162-970-11	s	CERAMIC, CHIP 0.01uF 10% 25V
C46	1-162-970-11	s	CERAMIC, CHIP 0.01uF 10% 25V
C47	1-124-477-11	s	ELECT 47uF 20% 25V
C48	1-162-970-11	s	CERAMIC, CHIP 0.01uF 10% 25V
C49	1-162-970-11	s	CERAMIC, CHIP 0.01uF 10% 25V
C51	1-162-970-11	s	CERAMIC, CHIP 0.01uF 10% 25V
C52	1-162-970-11	s	CERAMIC, CHIP 0.01uF 10% 25V
C53	1-162-970-11	s	CERAMIC, CHIP 0.01uF 10% 25V
C54	1-162-970-11	s	CERAMIC, CHIP 0.01uF 10% 25V
C55	1-124-477-11	s	ELECT 47uF 20% 25V
C56	1-162-970-11	s	CERAMIC, CHIP 0.01uF 10% 25V
C57	1-162-970-11	s	CERAMIC, CHIP 0.01uF 10% 25V
C58	1-162-970-11	s	CERAMIC, CHIP 0.01uF 10% 25V
C59	1-162-970-11	s	CERAMIC, CHIP 0.01uF 10% 25V

(PRE-10 BOARD)

Ref. No. or Q'ty	Part No.	SP	Description
C62	1-162-970-11	s	CERAMIC, CHIP 0.01uF 10% 25V
C63	1-162-970-11	s	CERAMIC, CHIP 0.01uF 10% 25V
C64	1-162-970-11	s	CERAMIC, CHIP 0.01uF 10% 25V
C65	1-162-970-11	s	CERAMIC, CHIP 0.01uF 10% 25V
C66	1-124-477-11	s	ELECT 47uF 20% 25V
C67	1-163-038-00	s	CERAMIC, CHIP 0.1uF 25V
C68	1-124-477-11	s	ELECT 47uF 20% 25V
C70	1-162-970-11	s	CERAMIC, CHIP 0.01uF 10% 25V
C71	1-124-477-11	s	ELECT 47uF 20% 25V
C72	1-162-970-11	s	CERAMIC, CHIP 0.01uF 10% 25V
C73	1-124-477-11	s	ELECT 47uF 20% 25V
C74	1-124-477-11	s	ELECT 47uF 20% 25V
C75	1-162-920-11	s	CERAMIC, CHIP 27PF 5% 50V
C76	1-162-920-11	s	CERAMIC, CHIP 27PF 5% 50V
C77	1-163-038-00	s	CERAMIC, CHIP 0.1uF 25V
C78	1-163-038-00	s	CERAMIC, CHIP 0.1uF 25V
C79	1-163-038-00	s	CERAMIC, CHIP 0.1uF 25V
C80	1-163-038-00	s	CERAMIC, CHIP 0.1uF 25V
C81	1-163-038-00	s	CERAMIC, CHIP 0.1uF 25V
C82	1-163-038-00	s	CERAMIC, CHIP 0.1uF 25V
C83	1-163-038-00	s	CERAMIC, CHIP 0.1uF 25V
C84	1-163-038-00	s	CERAMIC, CHIP 0.1uF 25V
C100	1-163-035-00	s	CERAMIC, CHIP 0.047uF 50V
C101	1-163-035-00	s	CERAMIC, CHIP 0.047uF 50V
C102	1-163-035-00	s	CERAMIC, CHIP 0.047uF 50V
C103	1-163-035-00	s	CERAMIC, CHIP 0.047uF 50V
C104	1-163-035-00	s	CERAMIC, CHIP 0.047uF 50V
C105	1-163-035-00	s	CERAMIC, CHIP 0.047uF 50V
C106	1-163-035-00	s	CERAMIC, CHIP 0.047uF 50V
C107	1-163-035-00	s	CERAMIC, CHIP 0.047uF 50V
C150	1-162-970-11	s	CERAMIC, CHIP 0.01uF 10% 25V
C151	1-162-995-11	s	CERAMIC, CHIP 0.022uF 50V
C152	1-164-816-11	s	CERAMIC, CHIP 220PF 2% 50V
C153	1-163-038-00	s	CERAMIC, CHIP 0.1uF 25V
C158	1-162-217-31	s	CERAMIC 56PF 5% 50V
C159	1-162-284-31	s	CERAMIC 150PF 10% 50V
C160	1-162-211-31	s	CERAMIC 33PF 5% 50V
CN1	1-506-472-11	s	CONNECTOR, 7P, MALE
CN511	1-506-480-11	s	CONNECTOR, 15P, MALE
CN512	1-568-964-11	s	CONNECTOR, 6P, MALE
CN513	1-566-761-11	o	CONNECTOR, 6P, MALE
DL1	1-415-162-21	s	DELAY LINE 50nS
IC1	8-752-030-66	s	IC CXA1077M
IC2	8-759-923-63	s	IC TL592PS
IC3	8-759-923-63	s	IC TL592PS
IC4	8-759-710-86	s	IC NJM2233BM-T1
IC5	8-759-710-86	s	IC NJM2233BM-T1
IC6	8-759-925-76	s	IC SN74HC08NS
IC7	8-759-925-74	s	IC TC74HC04NS
IC8	8-752-030-66	s	IC CXA1077M
IC9	8-759-923-63	s	IC TL592PS
IC10	8-759-923-63	s	IC TL592PS
IC11	8-759-710-86	s	IC NJM2233BM-T1
IC12	8-759-710-86	s	IC NJM2233BM-T1
IC13	8-759-923-63	s	IC TL592PS
IC14	8-759-710-86	s	IC NJM2233BM-T1
L1	1-408-785-21	s	INDUCTOR, CHIP 47UH

(PRE-10 BOARD)

Ref. No. or Q'ty	Part No.	SP	Description
L2	1-408-785-21	s	INDUCTOR, CHIP 47UH
L3	1-408-785-21	s	INDUCTOR, CHIP 47UH
L4	1-408-785-21	s	INDUCTOR, CHIP 47UH
L5	1-408-785-21	s	INDUCTOR, CHIP 47UH
L6	1-408-785-21	s	INDUCTOR, CHIP 47UH
L7	1-408-785-21	s	INDUCTOR, CHIP 47UH
L8	1-408-785-21	s	INDUCTOR, CHIP 47UH
L9	1-408-785-21	s	INDUCTOR, CHIP 47UH
L10	1-408-785-21	s	INDUCTOR, CHIP 47UH
L11	1-408-785-21	s	INDUCTOR, CHIP 47UH
L12	1-408-785-21	s	INDUCTOR, CHIP 47UH
L13	1-408-785-21	s	INDUCTOR, CHIP 47UH
L14	1-410-375-11	s	INDUCTOR, CHIP 3.3uH
L15	1-410-375-11	s	INDUCTOR, CHIP 3.3uH
L16	1-408-785-21	s	INDUCTOR, CHIP 47UH
L17	1-408-785-21	s	INDUCTOR, CHIP 47UH
Q1	8-729-120-28	s	TRANSISTOR 2SC1623-L5L6
Q2	8-729-120-28	s	TRANSISTOR 2SC1623-L5L6
Q3	8-729-120-28	s	TRANSISTOR 2SC1623-L5L6
Q4	8-729-905-23	s	TRANSISTOR 2SA1576-R
Q5	8-729-102-07	s	TRANSISTOR 2SC2223-F13
Q6	8-729-202-38	s	TRANSISTOR 2SC3326N
Q7	8-729-202-38	s	TRANSISTOR 2SC3326N
Q8	8-729-202-38	s	TRANSISTOR 2SC3326N
Q9	8-729-202-38	s	TRANSISTOR 2SC3326N
Q10	8-729-905-18	s	TRANSISTOR DTC144EU
Q11	8-729-905-23	s	TRANSISTOR 2SA1576-R
Q12	8-729-102-07	s	TRANSISTOR 2SC2223-F13
Q13	8-729-102-07	s	TRANSISTOR 2SC2223-F13
Q14	8-729-120-28	s	TRANSISTOR 2SC1623-L5L6
Q15	8-729-102-07	s	TRANSISTOR 2SC2223-F13
Q16	8-729-102-07	s	TRANSISTOR 2SC2223-F13
Q17	8-729-102-07	s	TRANSISTOR 2SC2223-F13
Q18	8-729-120-28	s	TRANSISTOR 2SC1623-L5L6
Q19	8-729-102-07	s	TRANSISTOR 2SC2223-F13
Q20	8-729-102-07	s	TRANSISTOR 2SC2223-F13
Q21	8-729-120-28	s	TRANSISTOR 2SC1623-L5L6
Q22	8-729-120-28	s	TRANSISTOR 2SC1623-L5L6
Q23	8-729-120-28	s	TRANSISTOR 2SC1623-L5L6
Q24	8-729-202-38	s	TRANSISTOR 2SC3326N
Q25	8-729-202-38	s	TRANSISTOR 2SC3326N
Q150	8-729-120-28	s	TRANSISTOR 2SC1623-L5L6
R1	1-218-735-11	s	METAL, CHIP 62K 0.50% 1/16W
R2	1-216-813-11	s	METAL, CHIP 220 5% 1/16W
R3	1-218-735-11	s	METAL, CHIP 62K 0.50% 1/16W
R4	1-216-841-11	s	METAL, CHIP 47K 5% 1/16W
R7	1-216-803-11	s	METAL, CHIP 33 5% 1/16W
R8	1-216-803-11	s	METAL, CHIP 33 5% 1/16W
R9	1-216-821-11	s	METAL, CHIP 1K 5% 1/16W
R10	1-216-803-11	s	METAL, CHIP 33 5% 1/16W
R11	1-216-829-11	s	METAL, CHIP 4.7K 5% 1/16W
R12	1-216-841-11	s	METAL, CHIP 47K 5% 1/16W
R13	1-218-735-11	s	METAL, CHIP 62K 0.50% 1/16W
R15	1-218-735-11	s	METAL, CHIP 62K 0.50% 1/16W
R19	1-216-803-11	s	METAL, CHIP 33 5% 1/16W
R20	1-216-803-11	s	METAL, CHIP 33 5% 1/16W
R21	1-216-821-11	s	METAL, CHIP 1K 5% 1/16W

(PRE-10 BOARD)

Ref. No. or Q'ty	Part No.	SP	Description
R22	1-216-803-11	s	METAL, CHIP 33 5% 1/16W
R23	1-216-829-11	s	METAL, CHIP 4.7K 5% 1/16W
R26	1-216-817-11	s	METAL, CHIP 470 5% 1/16W
R27	1-218-688-11	s	METAL, CHIP 680 0.50% 1/16W
R29	1-216-822-11	s	METAL, CHIP 1.2K 5% 1/16W
R30	1-216-820-11	s	METAL, CHIP 820 5% 1/16W
R31	1-216-821-11	s	METAL, CHIP 1K 5% 1/16W
R32	1-216-813-11	s	METAL, CHIP 220 5% 1/16W
R33	1-216-825-11	s	METAL, CHIP 2.2K 5% 1/16W
R34	1-216-817-11	s	METAL, CHIP 470 5% 1/16W
R35	1-216-837-11	s	METAL, CHIP 22K 5% 1/16W
R36	1-216-837-11	s	METAL, CHIP 22K 5% 1/16W
R37	1-216-837-11	s	METAL, CHIP 22K 5% 1/16W
R38	1-216-837-11	s	METAL, CHIP 22K 5% 1/16W
R39	1-216-833-11	s	METAL, CHIP 10K 5% 1/16W
R40	1-216-833-11	s	METAL, CHIP 10K 5% 1/16W
R42	1-216-813-11	s	METAL, CHIP 220 5% 1/16W
R43	1-220-373-11	s	METAL, CHIP 62K 0.50% 1/16W
R44	1-216-813-11	s	METAL, CHIP 220 5% 1/16W
R45	1-216-813-11	s	METAL, CHIP 220 5% 1/16W
R46	1-216-833-11	s	METAL, CHIP 10K 5% 1/16W
R47	1-216-833-11	s	METAL, CHIP 10K 5% 1/16W
R48	1-216-822-11	s	METAL, CHIP 1.2K 5% 1/16W
R49	1-216-825-11	s	METAL, CHIP 2.2K 5% 1/16W
R50	1-216-816-11	s	METAL, CHIP 390 5% 1/16W
R51	1-220-373-11	s	METAL, CHIP 62K 0.50% 1/16W
R52	1-218-270-11	s	METAL, CHIP 1.1K 5% 1/16W
R53	1-216-827-11	s	METAL, CHIP 3.3K 5% 1/16W
R54	1-216-827-11	s	METAL, CHIP 3.3K 5% 1/16W
R55	1-216-813-11	s	METAL, CHIP 220 5% 1/16W
R56	1-216-821-11	s	METAL, CHIP 1K 5% 1/16W
R57	1-216-823-11	s	METAL, CHIP 1.5K 5% 1/16W
R58	1-216-821-11	s	METAL, CHIP 1K 5% 1/16W
R59	1-216-838-11	s	METAL, CHIP 27K 5% 1/16W
R60	1-216-813-11	s	METAL, CHIP 220 5% 1/16W
R61	1-216-838-11	s	METAL, CHIP 27K 5% 1/16W
R62	1-216-841-11	s	METAL, CHIP 47K 5% 1/16W
R65	1-216-803-11	s	METAL, CHIP 33 5% 1/16W
R66	1-216-803-11	s	METAL, CHIP 33 5% 1/16W
R67	1-216-820-11	s	METAL, CHIP 820 5% 1/16W
R68	1-216-803-11	s	METAL, CHIP 33 5% 1/16W
R69	1-216-829-11	s	METAL, CHIP 4.7K 5% 1/16W
R70	1-216-841-11	s	METAL, CHIP 47K 5% 1/16W
R71	1-216-838-11	s	METAL, CHIP 27K 5% 1/16W
R73	1-216-838-11	s	METAL, CHIP 27K 5% 1/16W
R77	1-216-803-11	s	METAL, CHIP 33 5% 1/16W
R78	1-216-803-11	s	METAL, CHIP 33 5% 1/16W
R79	1-216-820-11	s	METAL, CHIP 820 5% 1/16W
R80	1-216-803-11	s	METAL, CHIP 33 5% 1/16W
R81	1-216-829-11	s	METAL, CHIP 4.7K 5% 1/16W
R86	1-216-864-11	s	METAL, CHIP 0 5% 1/16W
R89	1-216-820-11	s	METAL, CHIP 820 5% 1/16W
R90	1-216-833-11	s	METAL, CHIP 10K 5% 1/16W
R91	1-216-833-11	s	METAL, CHIP 10K 5% 1/16W
R92	1-216-829-11	s	METAL, CHIP 4.7K 5% 1/16W
R94	1-216-833-11	s	METAL, CHIP 10K 5% 1/16W
R95	1-216-845-11	s	METAL, CHIP 100K 5% 1/16W
R96	1-216-845-11	s	METAL, CHIP 100K 5% 1/16W
R97	1-216-845-11	s	METAL, CHIP 100K 5% 1/16W

(PRE-10 BOARD)

Ref. No. or Q'ty	Part No.	SP	Description
R99	1-216-845-11	s	METAL, CHIP 100K 5% 1/16W
R101	1-216-809-11	s	METAL, CHIP 100 5% 1/16W
R102	1-216-809-11	s	METAL, CHIP 100 5% 1/16W
R104	1-216-809-11	s	METAL, CHIP 100 5% 1/16W
R105	1-216-809-11	s	METAL, CHIP 100 5% 1/16W
R106	1-216-809-11	s	METAL, CHIP 100 5% 1/16W
R107	1-216-809-11	s	METAL, CHIP 100 5% 1/16W
R108	1-216-809-11	s	METAL, CHIP 100 5% 1/16W
R109	1-216-841-11	s	METAL, CHIP 47K 5% 1/16W
R110	1-216-841-11	s	METAL, CHIP 47K 5% 1/16W
R111	1-216-841-11	s	METAL, CHIP 47K 5% 1/16W
R112	1-216-841-11	s	METAL, CHIP 47K 5% 1/16W
R113	1-216-841-11	s	METAL, CHIP 47K 5% 1/16W
R114	1-216-841-11	s	METAL, CHIP 47K 5% 1/16W
R115	1-216-841-11	s	METAL, CHIP 47K 5% 1/16W
R116	1-216-841-11	s	METAL, CHIP 47K 5% 1/16W
R150	1-216-821-11	s	METAL, CHIP 1K 5% 1/16W
R151	1-216-841-11	s	METAL, CHIP 47K 5% 1/16W
R152	1-216-841-11	s	METAL, CHIP 47K 5% 1/16W
R153	1-216-821-11	s	METAL, CHIP 1K 5% 1/16W
R154	1-216-821-11	s	METAL, CHIP 1K 5% 1/16W
R155	1-216-825-11	s	METAL, CHIP 2.2K 5% 1/16W
R156	1-216-809-11	s	METAL, CHIP 100 5% 1/16W
R157	1-216-809-11	s	METAL, CHIP 100 5% 1/16W
R160	1-249-429-11	s	CARBON 10K 5% 1/4W
RV1	1-238-784-11	s	RES, ADJ METAL 1K
RV2	1-238-784-11	s	RES, ADJ METAL 1K
RV3	1-238-784-11	s	RES, ADJ METAL 1K
RV4	1-238-784-11	s	RES, ADJ METAL 1K
RV5	1-238-784-11	s	RES, ADJ METAL 1K
RV6	1-238-784-11	s	RES, ADJ METAL 1K
RV7	1-238-784-11	s	RES, ADJ METAL 1K
RV8	1-238-784-11	s	RES, ADJ METAL 1K

PTC-32 BOARD

Ref. No. or Q'ty	Part No.	SP	Description
1pc	1-564-026-00	o	CONTACT, FEMALE, AWG26-30
1pc	1-622-638-11	o	PRINTED CIRCUIT BOARD, PTC-32
C1	1-124-234-00	s	ELECT 22uF 20% 16V
CN4	1-562-151-11	s	HOUSING, 6P
IC1	8-719-939-50	s	PHOTOINTERRUPTER GP-1L52
IC2	8-719-939-50	s	PHOTOINTERRUPTER GP-1L52
IC3	8-719-940-86	s	PHOTOINTERRUPTER GP-1L53
IC4	8-719-939-50	s	PHOTOINTERRUPTER GP-1L52
IC5	8-759-133-90	s	IC UPC339C

RM-101 BOARD

Ref. No. or Q'ty	Part No.	SP	Description
1pc	1-642-970-11	o	PRINTED CIRCUIT BOARD, RM-101
CN1021	1-566-319-11	o	CONNECTOR, D-SUB 15P, MALE

RM-122 BOARD

Ref. No. or Q'ty	Part No.	SP	Description
1pc	1-642-971-11	o	PRINTED CIRCUIT BOARD, RM-122
CN1022	1-563-770-11	s	CONNECTOR, D-SUB 9P, FEMALE

RS-31 BOARD

Ref. No. or Q'ty	Part No.	SP	Description
1pc	A-7061-818-A	o	MOUNTED CIRCUIT BOARD, RS-31
1pc	1-559-762-11	o	CABLE, FLAT 22P
1pc	3-712-410-01	s	HOLDER, RS
CN304	1-563-494-11	o	CONNECTOR, FPC 6P, FEMALE
CN305	1-565-211-11	o	CONNECTOR, FPC (ZIF) 22P FEMALE
D320	8-719-800-76	s	DIODE 1SS226
D321	8-719-800-76	s	DIODE 1SS226
IC301	8-759-908-81	s	IC MB3763PF
IC302	8-759-908-81	s	IC MB3763PF
PH301	8-719-939-11	s	PHOTOINTERRUPTER GP-2S09-B
PH302	8-719-939-11	s	PHOTOINTERRUPTER GP-2S09-B
PH303	8-719-939-11	s	PHOTOINTERRUPTER GP-2S09-B
PS301	⚠1-532-727-11	s	LINK, IC 0.25A
Q301	8-729-805-25	s	TRANSISTOR 2SB1121-S
Q302	8-729-216-22	s	TRANSISTOR 2SA1162
Q303	8-729-216-22	s	TRANSISTOR 2SA1162
Q304	8-729-216-22	s	TRANSISTOR 2SA1162
Q305	8-729-901-01	s	TRANSISTOR DTC144EK
Q306	8-729-901-01	s	TRANSISTOR DTC144EK
Q307	8-729-901-01	s	TRANSISTOR DTC144EK
R302	1-216-174-00	s	METAL CHIP 100 5% 1/8W
R303	1-216-186-00	s	METAL 330 5% 1/8W

SST-2 BOARD

Ref. No. or Q'ty	Part No.	SP	Description
1pc	A-8271-231-A	o	MOUNTED CIRCUIT BOARD, SST-2
1pc	1-526-659-00	o	SOCKET, IC 28P
1pc	3-947-144-01	o	BRACKET, SST
2pcs	7-682-903-01	s	SCREW +PWH 3X5
C1	1-130-487-00	s	MYLAR 0.022uF 5% 50V
C2	1-162-919-11	s	CERAMIC, CHIP 22PF 5% 50V
C3	1-130-487-00	s	MYLAR 0.022uF 5% 50V
C4	1-162-919-11	s	CERAMIC, CHIP 22PF 5% 50V
C5	1-162-921-11	s	CERAMIC, CHIP 33PF 5% 50V
C6	1-162-921-11	s	CERAMIC, CHIP 33PF 5% 50V
C7	1-126-204-11	s	ELECT 47uF 20% 16V
C8	1-162-970-11	s	CERAMIC, CHIP 0.01uF 10% 25V
C9	1-162-970-11	s	CERAMIC, CHIP 0.01uF 10% 25V
C10	1-126-395-11	s	ELECT 22uF 20% 16V
C11	1-126-204-11	s	ELECT 47uF 20% 16V
C12	1-135-155-21	s	TANTALUM, CHIP 4.7uF 10% 16V
C13	1-126-193-11	s	ELECT 1uF 20% 50V
C14	1-126-603-11	s	ELECT 4.7uF 20% 35V
C15	1-162-970-11	s	CERAMIC, CHIP 0.01uF 10% 25V
C16	1-162-970-11	s	CERAMIC, CHIP 0.01uF 10% 25V
C17	1-162-927-11	s	CERAMIC, CHIP 100PF 5% 50V
C18	1-162-927-11	s	CERAMIC, CHIP 100PF 5% 50V
C19	1-162-910-11	s	CERAMIC, CHIP 5PF 50V
C20	1-162-970-11	s	CERAMIC, CHIP 0.01uF 10% 25V
C21	1-162-970-11	s	CERAMIC, CHIP 0.01uF 10% 25V
C22	1-126-204-11	s	ELECT 47uF 20% 16V
C23	1-162-970-11	s	CERAMIC, CHIP 0.01uF 10% 25V
C24	1-126-204-11	s	ELECT 47uF 20% 16V
C25	1-162-970-11	s	CERAMIC, CHIP 0.01uF 10% 25V
C27	1-162-970-11	s	CERAMIC, CHIP 0.01uF 10% 25V
C28	1-126-204-11	s	ELECT 47uF 20% 16V
C29	1-162-927-11	s	CERAMIC, CHIP 100PF 5% 50V
C30	1-162-927-11	s	CERAMIC, CHIP 100PF 5% 50V
C31	1-162-927-11	s	CERAMIC, CHIP 100PF 5% 50V
C40	1-163-035-00	s	CERAMIC, CHIP 0.047uF 50V
C41	1-163-035-00	s	CERAMIC, CHIP 0.047uF 50V
C42	1-163-275-11	s	CERAMIC, CHIP 0.001uF 5% 50V
C100	1-162-927-11	s	CERAMIC, CHIP 100PF 5% 50V
C101	1-130-471-00	s	MYLAR 0.001uF 5% 50V
C102	1-130-473-00	s	MYLAR 0.0015uF 5% 50V
C103	1-162-970-11	s	CERAMIC, CHIP 0.01uF 10% 25V
C104	1-107-163-11	s	MICA 47PF 5% 500
C105	1-130-471-00	s	MYLAR 0.001uF 5% 50V
C106	1-130-477-00	s	MYLAR 0.0033uF 5% 50V
C108	1-130-475-00	s	MYLAR 0.0022uF 5% 50V
C109	1-163-275-11	s	CERAMIC, CHIP 0.001uF 5% 50V
C110	1-163-263-11	s	CERAMIC, CHIP 330PF 5% 50V
C151	1-162-970-11	s	CERAMIC, CHIP 0.01uF 10% 25V
C152	1-162-970-11	s	CERAMIC, CHIP 0.01uF 10% 25V
C153	1-162-970-11	s	CERAMIC, CHIP 0.01uF 10% 25V
C154	1-162-970-11	s	CERAMIC, CHIP 0.01uF 10% 25V
C155	1-162-970-11	s	CERAMIC, CHIP 0.01uF 10% 25V
C156	1-162-970-11	s	CERAMIC, CHIP 0.01uF 10% 25V
C157	1-162-970-11	s	CERAMIC, CHIP 0.01uF 10% 25V
C158	1-162-970-11	s	CERAMIC, CHIP 0.01uF 10% 25V
C159	1-162-970-11	s	CERAMIC, CHIP 0.01uF 10% 25V
C160	1-162-970-11	s	CERAMIC, CHIP 0.01uF 10% 25V
C161	1-162-970-11	s	CERAMIC, CHIP 0.01uF 10% 25V
C162	1-162-970-11	s	CERAMIC, CHIP 0.01uF 10% 25V

(SST-2 BOARD)

Ref. No. or Q'ty	Part No.	SP	Description
C163	1-162-970-11	s	CERAMIC, CHIP 0.01uF 10% 25V
C164	1-162-970-11	s	CERAMIC, CHIP 0.01uF 10% 25V
C165	1-162-970-11	s	CERAMIC, CHIP 0.01uF 10% 25V
C166	1-162-970-11	s	CERAMIC, CHIP 0.01uF 10% 25V
C167	1-162-970-11	s	CERAMIC, CHIP 0.01uF 10% 25V
C168	1-162-970-11	s	CERAMIC, CHIP 0.01uF 10% 25V
C169	1-162-970-11	s	CERAMIC, CHIP 0.01uF 10% 25V
C201	1-163-035-00	s	CERAMIC, CHIP 0.047uF 50V
C202	1-163-263-11	s	CERAMIC, CHIP 330PF 5% 50V
C203	1-130-491-00	s	MYLAR 0.047uF 5% 50V
C204	1-163-133-00	s	CERAMIC, CHIP 470PF 5% 50V
C205	1-162-927-11	s	CERAMIC, CHIP 100PF 5% 50V
C206	1-163-125-00	s	CERAMIC, CHIP 220PF 5% 50V
C216	1-126-204-11	s	ELECT 47uF 20% 16V
C217	1-162-970-11	s	CERAMIC, CHIP 0.01uF 10% 25V
C218	1-162-921-11	s	CERAMIC, CHIP 33PF 5% 50V
C219	1-162-921-11	s	CERAMIC, CHIP 33PF 5% 50V
C220	1-130-471-00	s	MYLAR 0.001uF 5% 50V
C221	1-130-471-00	s	MYLAR 0.001uF 5% 50V
C222	1-162-966-11	s	CERAMIC, CHIP 0.0022uF 10% 50V
C401	1-162-916-11	s	CERAMIC, CHIP 12PF 5% 50V
C402	1-162-916-11	s	CERAMIC, CHIP 12PF 5% 50V
C403	1-162-970-11	s	CERAMIC, CHIP 0.01uF 10% 25V
C404	1-126-602-11	s	ELECT 3.3uF 20% 50V
C405	1-164-227-11	s	CERAMIC, CHIP 0.022uF 10% 25V
C406	1-162-970-11	s	CERAMIC, CHIP 0.01uF 10% 25V
C407	1-162-970-11	s	CERAMIC, CHIP 0.01uF 10% 25V
C408	1-162-927-11	s	CERAMIC, CHIP 100PF 5% 50V
C409	1-162-970-11	s	CERAMIC, CHIP 0.01uF 10% 25V
C410	1-162-970-11	s	CERAMIC, CHIP 0.01uF 10% 25V
C411	1-162-970-11	s	CERAMIC, CHIP 0.01uF 10% 25V
C412	1-162-970-11	s	CERAMIC, CHIP 0.01uF 10% 25V
C413	1-162-970-11	s	CERAMIC, CHIP 0.01uF 10% 25V
C414	1-162-970-11	s	CERAMIC, CHIP 0.01uF 10% 25V
C415	1-163-275-11	s	CERAMIC, CHIP 0.001uF 5% 50V
C416	1-163-275-11	s	CERAMIC, CHIP 0.001uF 5% 50V
C417	1-163-275-11	s	CERAMIC, CHIP 0.001uF 5% 50V
C418	1-163-275-11	s	CERAMIC, CHIP 0.001uF 5% 50V
C419	1-163-275-11	s	CERAMIC, CHIP 0.001uF 5% 50V
C420	1-163-275-11	s	CERAMIC, CHIP 0.001uF 5% 50V
C421	1-163-275-11	s	CERAMIC, CHIP 0.001uF 5% 50V
C422	1-163-275-11	s	CERAMIC, CHIP 0.001uF 5% 50V
C423	1-162-970-11	s	CERAMIC, CHIP 0.01uF 10% 25V
C424	1-162-970-11	s	CERAMIC, CHIP 0.01uF 10% 25V
C425	1-162-970-11	s	CERAMIC, CHIP 0.01uF 10% 25V
C426	1-162-970-11	s	CERAMIC, CHIP 0.01uF 10% 25V
C427	1-164-004-11	s	CERAMIC, CHIP 0.1uF 10% 25V
C428	1-162-970-11	s	CERAMIC, CHIP 0.01uF 10% 25V
C429	1-162-970-11	s	CERAMIC, CHIP 0.01uF 10% 25V
C432	1-162-927-11	s	CERAMIC, CHIP 100PF 5% 50V
C433	1-162-970-11	s	CERAMIC, CHIP 0.01uF 10% 25V
C434	1-162-927-11	s	CERAMIC, CHIP 100PF 5% 50V
C435	1-162-970-11	s	CERAMIC, CHIP 0.01uF 10% 25V
C436	1-162-970-11	s	CERAMIC, CHIP 0.01uF 10% 25V
C437	1-163-275-11	s	CERAMIC, CHIP 0.001uF 5% 50V
C440	1-163-031-11	s	CERAMIC, CHIP 0.01uF 50V
C441	1-163-031-11	s	CERAMIC, CHIP 0.01uF 50V
C450	1-126-233-11	s	ELECT 22uF 20% 50V
C501	1-162-916-11	s	CERAMIC, CHIP 12PF 5% 50V

(SST-2 BOARD)

Ref. No. or Q'ty	Part No.	SP	Description
C502	1-162-916-11	s	CERAMIC, CHIP 12PF 5% 50V
C503	1-163-038-00	s	CERAMIC, CHIP 0.1uF 25V
C504	1-162-927-11	s	CERAMIC, CHIP 100PF 5% 50V
C505	1-162-927-11	s	CERAMIC, CHIP 100PF 5% 50V
C509	1-163-038-00	s	CERAMIC, CHIP 0.1uF 25V
C510	1-163-038-00	s	CERAMIC, CHIP 0.1uF 25V
C511	1-163-038-00	s	CERAMIC, CHIP 0.1uF 25V
C512	1-126-395-11	s	ELECT 22uF 20% 16V
C513	1-124-779-00	s	ELECT 10uF 20% 16V
C514	1-163-275-11	s	CERAMIC, CHIP 0.001uF 5% 50V
C516	1-125-579-11	s	DOUBLE LAYERS 0.1FARAD 5.5V
C517	1-126-397-11	s	ELECT, CHIP 33uF 20% 25V
C518	1-162-967-11	s	CERAMIC, CHIP 0.0033uF 10% 50V
C519	1-162-970-11	s	CERAMIC, CHIP 0.01uF 10% 25V
C520	1-162-970-11	s	CERAMIC, CHIP 0.01uF 10% 25V
C521	1-162-970-11	s	CERAMIC, CHIP 0.01uF 10% 25V
C522	1-162-970-11	s	CERAMIC, CHIP 0.01uF 10% 25V
C523	1-126-204-11	s	ELECT 47uF 20% 16V
C601	1-124-779-00	s	ELECT 10uF 20% 16V
C602	1-124-779-00	s	ELECT 10uF 20% 16V
C603	1-164-227-11	s	CERAMIC, CHIP 0.022uF 10% 25V
C604	1-163-275-11	s	CERAMIC, CHIP 0.001uF 5% 50V
C605	1-163-275-11	s	CERAMIC, CHIP 0.001uF 5% 50V
C606	1-126-193-11	s	ELECT 1uF 20% 50V
C607	1-163-133-00	s	CERAMIC, CHIP 470PF 5% 50V
C608	1-164-227-11	s	CERAMIC, CHIP 0.022uF 10% 25V
C609	1-164-227-11	s	CERAMIC, CHIP 0.022uF 10% 25V
C610	1-135-179-21	s	TANTALUM 2.2uF 10% 16V
C611	1-124-779-00	s	ELECT 10uF 20% 16V
C612	1-163-038-00	s	CERAMIC, CHIP 0.1uF 25V
C613	1-126-204-11	s	ELECT 47uF 20% 16V
C614	1-164-227-11	s	CERAMIC, CHIP 0.022uF 10% 25V
C615	1-162-966-11	s	CERAMIC, CHIP 0.0022uF 10% 50V
C617	1-163-275-11	s	CERAMIC, CHIP 0.001uF 5% 50V
C618	1-126-204-11	s	ELECT 47uF 20% 16V
C619	1-126-204-11	s	ELECT 47uF 20% 16V
C620	1-164-227-11	s	CERAMIC, CHIP 0.022uF 10% 25V
C621	1-163-125-00	s	CERAMIC, CHIP 220PF 5% 50V
C622	1-164-227-11	s	CERAMIC, CHIP 0.022uF 10% 25V
C623	1-163-275-11	s	CERAMIC, CHIP 0.001uF 5% 50V
C624	1-164-227-11	s	CERAMIC, CHIP 0.022uF 10% 25V
C625	1-164-227-11	s	CERAMIC, CHIP 0.022uF 10% 25V
C626	1-126-204-11	s	ELECT 47uF 20% 16V
C627	1-164-227-11	s	CERAMIC, CHIP 0.022uF 10% 25V
C628	1-135-166-21	s	TANTALUM, CHIP 47uF 10% 10V
C631	1-126-204-11	s	ELECT 47uF 20% 16V
C701	1-163-038-00	s	CERAMIC, CHIP 0.1uF 25V
C702	1-124-779-00	s	ELECT 10uF 20% 16V
C703	1-163-038-00	s	CERAMIC, CHIP 0.1uF 25V
C704	1-163-038-00	s	CERAMIC, CHIP 0.1uF 25V
C705	1-124-779-00	s	ELECT 10uF 20% 16V
C706	1-163-038-00	s	CERAMIC, CHIP 0.1uF 25V
C707	1-163-038-00	s	CERAMIC, CHIP 0.1uF 25V
C708	1-164-156-11	s	CERAMIC, CHIP 0.1uF 25V
C709	1-163-125-00	s	CERAMIC, CHIP 220PF 5% 50V
C710	1-162-968-11	s	CERAMIC, CHIP 0.0047uF 10% 50V
C711	1-162-967-11	s	CERAMIC, CHIP 0.0033uF 10% 50V
C712	1-163-275-11	s	CERAMIC, CHIP 0.001uF 5% 50V
C713	1-163-038-00	s	CERAMIC, CHIP 0.1uF 25V

(SST-2 BOARD)

Ref. No. or Q'ty	Part No.	SP	Description
C714	1-163-275-11	s	CERAMIC, CHIP 0.001uF 5% 50V
C715	1-164-227-11	s	CERAMIC, CHIP 0.022uF 10% 25V
C716	1-163-275-11	s	CERAMIC, CHIP 0.001uF 5% 50V
C717	1-164-227-11	s	CERAMIC, CHIP 0.022uF 10% 25V
C718	1-162-970-11	s	CERAMIC, CHIP 0.01uF 10% 25V
C719	1-126-193-11	s	ELECT 1uF 20% 50V
C720	1-126-193-11	s	ELECT 1uF 20% 50V
C721	1-163-035-00	s	CERAMIC, CHIP 0.047uF 50V
C722	1-163-133-00	s	CERAMIC, CHIP 470PF 5% 50V
C723	1-163-275-11	s	CERAMIC, CHIP 0.001uF 5% 50V
C724	1-162-924-11	s	CERAMIC 56PF 5% 50V
C725	1-162-965-11	s	CERAMIC, CHIP 0.0015uF 10% 50V
C726	1-162-919-11	s	CERAMIC, CHIP 22PF 5% 50V
C727	1-163-035-00	s	CERAMIC, CHIP 0.047uF 50V
C728	1-162-921-11	s	CERAMIC, CHIP 33PF 5% 50V
C729	1-162-921-11	s	CERAMIC, CHIP 33PF 5% 50V
C730	1-124-779-00	s	ELECT 10uF 20% 16V
C731	1-162-970-11	s	CERAMIC, CHIP 0.01uF 10% 25V
C732	1-162-970-11	s	CERAMIC, CHIP 0.01uF 10% 25V
C733	1-162-970-11	s	CERAMIC, CHIP 0.01uF 10% 25V
C734	1-163-038-00	s	CERAMIC, CHIP 0.1uF 25V
C735	1-126-601-11	s	ELECT 2.2uF 20% 50V
C736	1-163-038-00	s	CERAMIC, CHIP 0.1uF 25V
C737	1-162-970-11	s	CERAMIC, CHIP 0.01uF 10% 25V
C738	1-163-038-00	s	CERAMIC, CHIP 0.1uF 25V
C739	1-163-038-00	s	CERAMIC, CHIP 0.1uF 25V
C740	1-162-970-11	s	CERAMIC, CHIP 0.01uF 10% 25V
C741	1-126-204-11	s	ELECT 47uF 20% 16V
C742	1-163-035-00	s	CERAMIC, CHIP 0.047uF 50V
C743	1-162-970-11	s	CERAMIC, CHIP 0.01uF 10% 25V
C744	1-164-227-11	s	CERAMIC, CHIP 0.022uF 10% 25V
C745	1-163-038-00	s	CERAMIC, CHIP 0.1uF 25V
C746	1-124-779-00	s	ELECT 10uF 20% 16V
C747	1-163-038-00	s	CERAMIC, CHIP 0.1uF 25V
C754	1-163-038-00	s	CERAMIC, CHIP 0.1uF 25V
C755	1-124-779-00	s	ELECT 10uF 20% 16V
C759	1-163-035-00	s	CERAMIC, CHIP 0.047uF 50V
C760	1-162-970-11	s	CERAMIC, CHIP 0.01uF 10% 25V
C804	1-126-204-11	s	ELECT 47uF 20% 16V
C805	1-126-204-11	s	ELECT 47uF 20% 16V
C806	1-126-187-11	s	ELECT 0.1uF 20% 50V
C807	1-162-969-11	s	CERAMIC, CHIP 0.0068uF 10% 25V
C808	1-126-602-11	s	ELECT 3.3uF 20% 50V
C809	1-124-779-00	s	ELECT 10uF 20% 16V
C810	1-124-779-00	s	ELECT 10uF 20% 16V
C811	1-124-779-00	s	ELECT 10uF 20% 16V
C812	1-124-779-00	s	ELECT 10uF 20% 16V
C813	1-126-193-11	s	ELECT 1uF 20% 50V
C814	1-126-193-11	s	ELECT 1uF 20% 50V
C815	1-126-193-11	s	ELECT 1uF 20% 50V
C816	1-126-193-11	s	ELECT 1uF 20% 50V
C817	1-126-200-11	s	ELECT 10uF 20% 35V
C820	1-163-038-00	s	CERAMIC, CHIP 0.1uF 25V
C821	1-162-970-11	s	CERAMIC, CHIP 0.01uF 10% 25V
C822	1-162-970-11	s	CERAMIC, CHIP 0.01uF 10% 25V
C823	1-163-038-00	s	CERAMIC, CHIP 0.1uF 25V
C824	1-163-038-00	s	CERAMIC, CHIP 0.1uF 25V
C825	1-126-602-11	s	ELECT 3.3uF 20% 50V
C826	1-164-227-11	s	CERAMIC, CHIP 0.022uF 10% 25V

(SST-2 BOARD)

Ref. No. or Q'ty	Part No.	SP	Description
C827	1-164-227-11	s	CERAMIC, CHIP 0.022uF 10% 25V
C828	1-126-395-11	s	ELECT 22uF 20% 16V
C829	1-126-395-11	s	ELECT 22uF 20% 16V
C830	1-126-395-11	s	ELECT 22uF 20% 16V
C831	1-163-038-00	s	CERAMIC, CHIP 0.1uF 25V
C832	1-163-038-00	s	CERAMIC, CHIP 0.1uF 25V
C836	1-163-036-00	s	CERAMIC, CHIP 0.068 50V
C837	1-126-189-11	s	ELECT 0.22uF 20% 50V
C838	1-126-204-11	s	ELECT 47uF 20% 16V
C839	1-126-529-11	s	ELECT 0.47uF 20% 50V
C840	1-162-970-11	s	CERAMIC, CHIP 0.01uF 10% 25V
C841	1-163-038-00	s	CERAMIC, CHIP 0.1uF 25V
C842	1-163-038-00	s	CERAMIC, CHIP 0.1uF 25V
C843	1-126-501-11	s	ELECT 0.15uF 20% 50V
C844	1-162-970-11	s	CERAMIC, CHIP 0.01uF 10% 25V
C902	1-126-395-11	s	ELECT 22uF 20% 16V
C903	1-126-395-11	s	ELECT 22uF 20% 16V
C904	1-126-395-11	s	ELECT 22uF 20% 16V
C905	1-126-601-11	s	ELECT 2.2uF 20% 50V
C906	1-162-970-11	s	CERAMIC, CHIP 0.01uF 10% 25V
C907	1-163-038-00	s	CERAMIC, CHIP 0.1uF 25V
C908	1-124-779-00	s	ELECT 10uF 20% 16V
C909	1-163-038-00	s	CERAMIC, CHIP 0.1uF 25V
C910	1-163-809-11	s	CERAMIC, CHIP 0.047uF 50V
C911	1-163-809-11	s	CERAMIC, CHIP 0.047uF 50V
C912	1-162-970-11	s	CERAMIC, CHIP 0.01uF 10% 25V
C913	1-162-970-11	s	CERAMIC, CHIP 0.01uF 10% 25V
C914	1-126-204-11	s	ELECT 47uF 20% 16V
C915	1-162-970-11	s	CERAMIC, CHIP 0.01uF 10% 25V
C916	1-126-530-11	s	ELECT 22uF 20% 10V
C917	1-126-530-11	s	ELECT 22uF 20% 10V
C918	1-162-970-110	s	CERAMIC, CHIP 0.01uF 10% 25V
C919	1-162-970-11	s	CERAMIC, CHIP 0.01uF 10% 25V
C950	1-163-036-00	s	CERAMIC, CHIP 0.068 50V
C951	1-126-200-11	s	ELECT 10uF 20% 35V
C952	1-162-970-11	s	CERAMIC, CHIP 0.01uF 10% 25V
C953	1-162-970-11	s	CERAMIC, CHIP 0.01uF 10% 25V
C954	1-163-038-00	s	CERAMIC, CHIP 0.1uF 25V
C955	1-163-038-00	s	CERAMIC, CHIP 0.1uF 25V
C1001	1-135-070-00	s	TANTALUM, CHIP 0.1uF 10% 35V
C1002	1-162-974-11	s	CERAMIC 0.01uF 50V
C1003	1-162-974-11	s	CERAMIC 0.01uF 50V
C1004	1-162-974-11	s	CERAMIC 0.01uF 50V
C1005	1-162-974-11	s	CERAMIC 0.01uF 50V
C1906	1-126-194-21	s	ELECT 1.5uF 20% 50V
C1907	1-131-587-11	s	TANTALUM 0.68uF 5% 35V
CN31	1-506-468-11	s	CONNECTOR, 3P, MALE
CN51	1-506-475-11	s	CONNECTOR, 10P, MALE
CN52	1-506-474-11	s	CONNECTOR, 9P, MALE
CN53	1-506-475-11	o	CONNECTOR, 10P, MALE
CN54	1-506-475-11	o	CONNECTOR, 10P, MALE
CN55	1-506-473-11	s	CONNECTOR, 8P, MALE
CN61	1-506-469-11	s	CONNECTOR, 4P, MALE
CN62	1-506-469-11	s	CONNECTOR, 4P, MALE
CN63	1-506-467-11	s	CONNECTOR, 2P, MALE
CN005	1-506-470-11	s	CONNECTOR, 5P, MALE
CN307	1-506-483-21	s	CONNECTOR, 4P, MALE
CN308	1-506-473-11	s	CONNECTOR, 8P, MALE

(SST-2 BOARD)

Ref. No. or Q'ty	Part No.	SP	Description
CN309	1-506-482-11	s	CONNECTOR, 3P, MALE
CN311	1-563-863-21	o	CONNECTOR, 26P, MALE
CN312	1-563-863-21	o	CONNECTOR, 26P, MALE
CN313	1-563-863-21	o	CONNECTOR, 26P, MALE
CN314	1-563-863-21	o	CONNECTOR, 26P, MALE
CN315	1-563-863-21	o	CONNECTOR, 26P, MALE
CN316	1-506-471-11	s	CONNECTOR, 6P, MALE
CN318	1-506-477-11	s	CONNECTOR, 12P, MALE
CN319	1-506-477-11	s	CONNECTOR, 12P, MALE
CN320	1-506-473-11	s	CONNECTOR, 8P, MALE
CN321	1-564-209-00	o	CONNECTOR, IL-S 10P, MALE
CN322	1-506-477-11	s	CONNECTOR, 12P, MALE
CN323	1-506-475-11	s	CONNECTOR, 10P, MALE
CN324	1-506-473-11	o	CONNECTOR, 8P, MALE
CN325	1-506-471-11	s	CONNECTOR, 6P, MALE
CN326	1-506-480-11	o	CONNECTOR, 15P, MALE
CN327	1-506-476-11	o	CONNECTOR, 11P, MALE
CN328	1-506-475-11	s	CONNECTOR, 10P, MALE
CN329	1-506-487-11	s	CONNECTOR, 8P, MALE
CN330	1-506-477-11	s	CONNECTOR, 12P, MALE
COP1	1-566-388-11	s	CONNECTOR, 8P, MALE
COR1	1-563-859-11	s	PLUG, SHORTING
CV100	1-141-227-00	s	CAP, TRIMMER 20PF
D1	8-719-104-34	s	DIODE 1S2835
D2	8-719-104-34	s	DIODE 1S2835
D5	8-719-200-02	s	DIODE 10E2
D6	8-719-200-02	s	DIODE 10E2
D10	8-719-800-76	s	DIODE 1SS226
D11	8-719-800-76	s	DIODE 1SS226
D12	8-719-104-34	s	DIODE 1S2835
D201	8-719-104-34	s	DIODE 1S2835
D203	8-719-104-34	s	DIODE 1S2835
D204	8-719-104-34	s	DIODE 1S2835
D206	8-719-104-34	s	DIODE 1S2835
D401	8-719-800-76	s	DIODE 1SS226
D402	8-719-800-76	s	DIODE 1SS226
D403	8-719-800-76	s	DIODE 1SS226
D404	8-719-800-76	s	DIODE 1SS226
D405	8-719-800-76	s	DIODE 1SS226
D406	8-719-800-76	s	DIODE 1SS226
D407	8-719-800-76	s	DIODE 1SS226
D408	8-719-800-76	s	DIODE 1SS226
D410	8-719-911-19	s	DIODE 1SS119
D502	8-719-104-34	s	DIODE 1S2835
D504	8-719-104-34	s	DIODE 1S2835
D505	8-719-104-34	s	DIODE 1S2835
D506	8-719-104-34	s	DIODE 1S2835
D602	8-719-800-76	s	DIODE 1SS226
D603	8-719-800-76	s	DIODE 1SS226
D701	8-719-025-29	s	DIODE 02CZ5.1
D802	8-719-800-76	s	DIODE 1SS226
D811	8-719-200-27	s	DIODE E10DS2
D904	8-719-800-76	s	DIODE 1SS226
D906	8-719-800-76	s	DIODE 1SS226
D907	8-719-800-76	s	DIODE 1SS226
D908	8-719-800-76	s	DIODE 1SS226
D909	8-719-800-76	s	DIODE 1SS226

(SST-2 BOARD)

Ref. No. or Q'ty	Part No.	SP	Description
D1001	8-719-820-61	s	DIODE 1SS294
D1002	8-719-104-34	s	DIODE 1S2835
IC1	8-759-072-59	s	IC TMPZ84C011BF-6
IC3	8-752-331-00	s	IC CXK5864BM-12L
IC4	8-752-323-26	s	IC CXK1009P
IC5	8-759-072-60	s	IC Z84C4306FEC
IC6	8-759-938-68	s	IC CXD1095Q
IC8	8-759-009-51	s	IC MC14538BF
IC9	8-759-925-74	s	IC TC74HC04NS
IC10	8-759-991-86	s	IC 74F11SJ
IC11	8-759-009-10	s	IC MC14069UBF
IC13	8-759-925-85	s	IC SN74HC32NS
IC14	8-759-926-12	s	IC SN74HC139NS
IC15	8-759-925-74	s	IC TC74HC04NS
IC16	8-759-146-83	s	IC UPD7564CS-110
IC17	8-759-989-03	s	IC 74F32SJ
IC18	8-759-925-80	s	IC SN74HC14NS
IC19	8-759-925-76	s	IC SN74HC08NS
IC21	8-759-925-74	s	IC TC74HC04NS
IC22	8-759-937-97	s	IC MC3486N
IC23	8-759-937-96	s	IC MC3487N
IC51	8-759-938-68	s	IC CXD1095Q
IC52	8-759-926-77	s	IC SN74HC541NS
IC53	8-759-926-82	s	IC SN74HC574ANS
IC54	8-759-925-85	s	IC SN74HC32NS
IC100	8-759-908-23	s	IC MB88303
IC101	8-759-009-51	s	IC MC14538BF
IC102	8-759-009-51	s	IC MC14538BF
IC103	8-759-925-05	s	IC LM2903PS
IC104	8-759-008-86	s	IC MC14017BF
IC105	8-759-925-90	s	IC SN74HC74NS
IC107	8-759-008-82	s	IC MC14013BF
IC201	8-759-144-89	s	IC UPD75108G-E30-1B
IC202	8-759-926-37	s	IC SN74HC193NS
IC203	8-759-925-90	s	IC SN74HC74NS
IC204	8-759-926-37	s	IC SN74HC193NS
IC208	8-759-925-80	s	IC SN74HC14NS
IC209	8-759-925-85	s	IC SN74HC32NS
IC210	8-759-925-81	s	IC SN74HC20ANS
IC211	8-759-925-81	s	IC SN74HC20ANS
IC212	8-759-925-76	s	IC SN74HC08NS
IC213	8-759-925-76	s	IC SN74HC08NS
IC214	8-759-925-80	s	IC SN74HC14NS
IC216	8-759-926-18	s	IC SN74HC157ANS
IC401	8-759-925-76	s	IC SN74HC08NS
IC402	8-759-925-85	s	IC SN74HC32NS
IC403	8-759-925-86	s	IC SN74HC36NS
IC404	8-759-239-23	s	IC TC74HC86AF
IC405	8-752-841-76	s	IC CXP80624-445Q
IC406	8-759-100-95	s	IC UPC324G2
IC408	8-759-925-90	s	IC SN74HC74NS
IC409	8-759-009-51	s	IC MC14538BF
IC410	8-759-925-86	s	IC SN74HC36NS
IC411	8-759-009-07	s	IC MC14053BF
IC412	8-759-925-76	s	IC SN74HC08NS
IC413	8-759-927-46	s	IC SN74HC00NS
IC501	8-752-841-75	s	IC CXP80116-870Q
IC502	8-759-144-21	s	IC UPD75106G-573-1B

(SST-2 BOARD)

Ref. No. or Q'ty	Part No.	SP	Description
IC503	8-752-841-74	s	IC CXP80116-871Q
IC504	8-759-239-55	s	IC TC74HC123AF
IC601	8-759-100-93	s	IC UPC393G2
IC602	8-759-009-07	s	IC MC14053BF
IC603	8-759-009-51	s	IC MC14538BF
IC604	8-759-925-05	s	IC LM2903PS
IC605	8-759-925-80	s	IC SN74HC14NS
IC606	8-759-925-90	s	IC SN74HC74NS
IC607	8-759-925-05	s	IC LM2903PS
IC701	8-759-927-46	s	IC SN74HC00NS
IC702	8-752-035-48	s	IC CXA1204Q
IC703	8-759-100-95	s	IC UPC324G2
IC704	8-759-009-07	s	IC MC14053BF
IC705	8-752-035-48	s	IC CXA1204Q
IC706	8-759-008-67	s	IC MC14066BF
IC707	8-759-927-46	s	IC SN74HC00NS
IC801	8-752-037-08	s	IC CXA1109M
IC802	8-759-108-77	s	IC CX877
IC803	8-759-100-95	s	IC UPC324G2
IC804	8-759-701-24	s	IC RC3414M
IC805	8-759-100-93	s	IC UPC393G2
IC806	8-759-207-00	s	IC A7733F
IC809	8-759-100-94	s	IC UPC358G2
IC901	8-759-207-50	s	IC TA7745F
IC902	8-759-100-95	s	IC UPC324G2
IC903	8-759-925-66	s	IC BA6303F
IC904	8-759-008-67	s	IC MC14066BF
IC905	8-759-100-94	s	IC UPC358G2
IC906	8-759-982-21	s	IC RC78L05A
IC1001	8-759-100-97	s	IC UPC339G2
IC1002	8-759-700-43	s	IC NJM4558M
IC1003	8-759-008-67	s	IC MC14066BF
L101	1-410-386-11	s	INDUCTOR, CHIP 27uH
L401	1-410-381-11	s	INDUCTOR, CHIP 10UH
L601	1-410-381-11	s	INDUCTOR, CHIP 10UH
L701	1-408-795-21	s	INDUCTOR, CHIP 330UH
L702	1-410-381-11	s	INDUCTOR, CHIP 10UH
L703	1-410-381-11	s	INDUCTOR, CHIP 10UH
L704	1-410-381-11	s	INDUCTOR, CHIP 10UH
L705	1-410-381-11	s	INDUCTOR, CHIP 10UH
PS1	⚠1-532-679-00	s	LINK, IC 0.6A
PS2	⚠1-532-637-00	s	LINK, IC 1.0A
PS3	⚠1-532-675-00	s	LINK, IC 1.5A
PS701	⚠1-532-679-00	s	LINK, IC 0.6A
PS801	⚠1-532-685-00	s	LINK, IC 0.6A
Q1	8-729-905-18	s	TRANSISTOR DTC144EU
Q2	8-729-905-12	s	TRANSISTOR DTA144EU
Q3	8-729-905-18	s	TRANSISTOR DTC144EU
Q4	8-729-905-18	s	TRANSISTOR DTC144EU
Q6	8-729-905-18	s	TRANSISTOR DTC144EU
Q8	8-729-905-18	s	TRANSISTOR DTC144EU
Q15	8-729-905-18	s	TRANSISTOR DTC144EU
Q16	8-729-114-43	s	TRANSISTOR 2SD1309
Q17	8-729-100-66	s	TRANSISTOR 2SC1623
Q18	8-729-100-66	s	TRANSISTOR 2SC1623
Q19	8-729-905-12	s	TRANSISTOR DTA144EU
Q20	8-729-100-66	s	TRANSISTOR 2SC1623
Q21	8-729-905-18	s	TRANSISTOR DTC144EU

(SST-2 BOARD)

Ref. No. or Q'ty	Part No.	SP	Description
Q201	8-729-905-18	s	TRANSISTOR DTC144EU
Q202	8-729-905-18	s	TRANSISTOR DTC144EU
Q203	8-729-905-18	s	TRANSISTOR DTC144EU
Q204	8-729-905-18	s	TRANSISTOR DTC144EU
Q205	8-729-905-23	s	TRANSISTOR 2SA1576-R
Q401	8-729-100-66	s	TRANSISTOR 2SC1623
Q501	8-729-905-18	s	TRANSISTOR DTC144EU
Q502	8-729-905-12	s	TRANSISTOR DTA144EU
Q503	8-729-905-18	s	TRANSISTOR DTC144EU
Q504	8-729-905-12	s	TRANSISTOR DTA144EU
Q505	8-729-905-18	s	TRANSISTOR DTC144EU
Q506	8-729-905-12	s	TRANSISTOR DTA144EU
Q507	8-729-905-12	s	TRANSISTOR DTA144EU
Q508	8-729-100-66	s	TRANSISTOR 2SC1623
Q509	8-729-805-25	s	TRANSISTOR 2SB1121-S
Q510	8-729-100-66	s	TRANSISTOR 2SC1623
Q511	8-729-905-18	s	TRANSISTOR DTC144EU
Q512	8-729-905-12	s	TRANSISTOR DTA144EU
Q513	8-729-905-18	s	TRANSISTOR DTC144EU
Q514	8-729-905-18	s	TRANSISTOR DTC144EU
Q515	8-729-905-23	s	TRANSISTOR 2SA1576-R
Q602	8-729-905-12	s	TRANSISTOR DTA144EU
Q603	8-729-905-23	s	TRANSISTOR 2SA1576-R
Q604	8-729-100-66	s	TRANSISTOR 2SC1623
Q605	8-729-905-23	s	TRANSISTOR 2SA1576-R
Q701	8-729-905-18	s	TRANSISTOR DTC144EU
Q702	8-729-905-12	s	TRANSISTOR DTA144EU
Q703	8-729-905-12	s	TRANSISTOR DTA144EU
Q704	8-729-905-12	s	TRANSISTOR DTA144EU
Q705	8-729-100-66	s	TRANSISTOR 2SC1623
Q706	8-729-100-66	s	TRANSISTOR 2SC1623
Q707	8-729-905-23	s	TRANSISTOR 2SA1576-R
Q708	8-729-100-66	s	TRANSISTOR 2SC1623
Q709	8-729-905-23	s	TRANSISTOR 2SA1576-R
Q710	8-729-100-66	s	TRANSISTOR 2SC1623
Q711	8-729-805-25	s	TRANSISTOR 2SB1121-S
Q712	8-729-905-12	s	TRANSISTOR DTA144EU
Q713	8-729-100-66	s	TRANSISTOR 2SC1623
Q714	8-729-905-18	s	TRANSISTOR DTC144EU
Q715	8-729-905-12	s	TRANSISTOR DTA144EU
Q716	8-729-100-66	s	TRANSISTOR 2SC1623
Q717	8-729-100-66	s	TRANSISTOR 2SC1623
Q718	8-729-905-12	s	TRANSISTOR DTA144EU
Q719	8-729-100-66	s	TRANSISTOR 2SC1623
Q720	8-729-905-18	s	TRANSISTOR DTC144EU
Q802	8-729-100-66	s	TRANSISTOR 2SC1623
Q803	8-729-111-14	s	TRANSISTOR 2SA1385-Z-L
Q804	8-729-111-14	s	TRANSISTOR 2SA1385-Z-L
Q809	8-729-111-95	s	TRANSISTOR 2SC3518-ZL
Q810	8-729-805-25	s	TRANSISTOR 2SB1121-S
Q811	8-729-805-25	s	TRANSISTOR 2SB1121-S
Q812	8-729-111-14	s	TRANSISTOR 2SA1385-Z-L
Q813	8-729-100-66	s	TRANSISTOR 2SC1623
Q814	8-729-101-73	s	TRANSISTOR 2SD992A
Q815	8-729-101-73	s	TRANSISTOR 2SD992A
Q816	8-729-101-73	s	TRANSISTOR 2SD992A
Q817	8-729-101-73	s	TRANSISTOR 2SD992A
Q818	8-729-101-73	s	TRANSISTOR 2SD992A
Q819	8-729-101-73	s	TRANSISTOR 2SD992A

(SST-2 BOARD)

Ref. No. or Q'ty	Part No.	SP	Description
Q901	8-729-920-82	s	TRANSISTOR 2SB1188-QR
Q902	8-729-920-82	s	TRANSISTOR 2SB1188-QR
Q903	8-729-920-82	s	TRANSISTOR 2SB1188-QR
Q904	8-729-905-12	s	TRANSISTOR DTA144EU
Q905	8-729-905-12	s	TRANSISTOR DTA144EU
Q906	8-729-905-18	s	TRANSISTOR DTC144EU
Q907	8-729-100-66	s	TRANSISTOR 2SC1623
Q908	8-729-905-61	s	TRANSISTOR DTC124EU
Q909	8-729-905-57	s	TRANSISTOR DTA124EU
Q950	8-729-903-97	s	TRANSISTOR FMS1FE
Q951	8-729-905-18	s	TRANSISTOR DTC144EU
Q952	8-729-905-18	s	TRANSISTOR DTC144EU
Q953	8-729-905-18	s	TRANSISTOR DTC144EU
Q954	8-729-905-12	s	TRANSISTOR DTA144EU
Q955	8-729-905-18	s	TRANSISTOR DTC144EU
Q956	8-729-905-12	s	TRANSISTOR DTA144EU
Q957	8-729-905-12	s	TRANSISTOR DTA144EU
Q958	8-729-905-18	s	TRANSISTOR DTC144EU
R1	1-216-837-11	s	METAL, CHIP 22K 5% 1/16W
R2	1-216-845-11	s	METAL, CHIP 100K 5% 1/16W
R3	1-216-837-11	s	METAL, CHIP 22K 5% 1/16W
R4	1-216-825-11	s	METAL, CHIP 2.2K 5% 1/16W
R5	1-216-833-11	s	METAL, CHIP 10K 5% 1/16W
R6	1-216-809-11	s	METAL, CHIP 100 5% 1/16W
R7	1-216-841-11	s	METAL, CHIP 47K 5% 1/16W
R8	1-216-841-11	s	METAL, CHIP 47K 5% 1/16W
R9	1-216-833-11	s	METAL, CHIP 10K 5% 1/16W
R10	1-216-837-11	s	METAL, CHIP 22K 5% 1/16W
R11	1-216-837-11	s	METAL, CHIP 22K 5% 1/16W
R12	1-216-833-11	s	METAL, CHIP 10K 5% 1/16W
R13	1-216-833-11	s	METAL, CHIP 10K 5% 1/16W
R14	1-216-830-11	s	METAL, CHIP 5.6K 5% 1/16W
R15	1-216-837-11	s	METAL, CHIP 22K 5% 1/16W
R16	1-216-837-11	s	METAL, CHIP 22K 5% 1/16W
R17	1-216-830-11	s	METAL, CHIP 5.6K 5% 1/16W
R18	1-216-840-11	s	METAL, CHIP 39K 5% 1/16W
R19	1-216-840-11	s	METAL, CHIP 39K 5% 1/16W
R20	1-216-841-11	s	METAL, CHIP 47K 5% 1/16W
R21	1-216-833-11	s	METAL, CHIP 10K 5% 1/16W
R22	1-216-833-11	s	METAL, CHIP 10K 5% 1/16W
R24	1-216-809-11	s	METAL, CHIP 100 5% 1/16W
R25	1-216-815-11	s	METAL, CHIP 330 5% 1/16W
R26	1-216-841-11	s	METAL, CHIP 47K 5% 1/16W
R27	1-216-841-11	s	METAL, CHIP 47K 5% 1/16W
R28	1-216-841-11	s	METAL, CHIP 47K 5% 1/16W
R29	1-216-829-11	s	METAL, CHIP 4.7K 5% 1/16W
R30	1-216-833-11	s	METAL, CHIP 10K 5% 1/16W
R31	1-216-833-11	s	METAL, CHIP 10K 5% 1/16W
R32	1-216-827-11	s	METAL, CHIP 3.3K 5% 1/16W
R33	1-216-841-11	s	METAL, CHIP 47K 5% 1/16W
R34	1-216-849-11	s	METAL, CHIP 220K 5% 1/16W
R37	1-216-809-11	s	METAL, CHIP 100 5% 1/16W
R38	1-216-840-11	s	METAL, CHIP 39K 5% 1/16W
R39	1-216-809-11	s	METAL, CHIP 100 5% 1/16W
R40	1-216-845-11	s	METAL, CHIP 100K 5% 1/16W
R41	1-216-857-11	s	METAL, CHIP 1M 5% 1/16W
R42	1-216-829-11	s	METAL, CHIP 4.7K 5% 1/16W
R43	1-216-837-11	s	METAL, CHIP 22K 5% 1/16W

(SST-2 BOARD)

Ref. No. or Q'ty	Part No.	SP	Description
R44	1-216-857-11	s	METAL, CHIP 1M 5% 1/16W
R45	1-216-833-11	s	METAL, CHIP 10K 5% 1/16W
R46	1-216-826-11	s	METAL, CHIP 2.7K 5% 1/16W
R48	1-216-833-11	s	METAL, CHIP 10K 5% 1/16W
R49	1-216-826-11	s	METAL, CHIP 2.7K 5% 1/16W
R50	1-216-814-11	s	METAL, CHIP 270 5% 1/16W
R51	1-216-815-11	s	METAL, CHIP 330 5% 1/16W
R56	1-216-821-11	s	METAL, CHIP 1K 5% 1/16W
R57	1-216-821-11	s	METAL, CHIP 1K 5% 1/16W
R58	1-216-833-11	s	METAL, CHIP 10K 5% 1/16W
R59	1-216-833-11	s	METAL, CHIP 10K 5% 1/16W
R60	1-216-821-11	s	METAL, CHIP 1K 5% 1/16W
R61	1-216-821-11	s	METAL, CHIP 1K 5% 1/16W
R62	1-216-821-11	s	METAL, CHIP 1K 5% 1/16W
R63	1-216-821-11	s	METAL, CHIP 1K 5% 1/16W
R64	1-216-821-11	s	METAL, CHIP 1K 5% 1/16W
R65	1-216-821-11	s	METAL, CHIP 1K 5% 1/16W
R66	1-216-821-11	s	METAL, CHIP 1K 5% 1/16W
R67	1-216-821-11	s	METAL, CHIP 1K 5% 1/16W
R69	1-216-809-11	s	METAL, CHIP 100 5% 1/16W
R70	1-216-809-11	s	METAL, CHIP 100 5% 1/16W
R71	1-216-831-11	s	METAL, CHIP 6.8K 5% 1/16W
R72	1-216-841-11	s	METAL, CHIP 47K 5% 1/16W
R73	1-216-809-11	s	METAL, CHIP 100 5% 1/16W
R74	1-216-821-11	s	METAL, CHIP 1K 5% 1/16W
R75	1-216-821-11	s	METAL, CHIP 1K 5% 1/16W
R76	1-216-821-11	s	METAL, CHIP 1K 5% 1/16W
R77	1-216-821-11	s	METAL, CHIP 1K 5% 1/16W
R78	1-216-821-11	s	METAL, CHIP 1K 5% 1/16W
R79	1-216-821-11	s	METAL, CHIP 1K 5% 1/16W
R83	1-216-841-11	s	METAL, CHIP 47K 5% 1/16W
R84	1-216-823-11	s	METAL, CHIP 1.5K 5% 1/16W
R85	1-216-809-11	s	METAL, CHIP 100 5% 1/16W
R86	1-216-823-11	s	METAL, CHIP 1.5K 5% 1/16W
R87	1-216-823-11	s	METAL, CHIP 1.5K 5% 1/16W
R88	1-216-809-11	s	METAL, CHIP 100 5% 1/16W
R89	1-216-823-11	s	METAL, CHIP 1.5K 5% 1/16W
R90	1-216-833-11	s	METAL, CHIP 10K 5% 1/16W
R91	1-216-833-11	s	METAL, CHIP 10K 5% 1/16W
R100	1-216-833-11	s	METAL, CHIP 10K 5% 1/16W
R101	1-216-841-11	s	METAL, CHIP 47K 5% 1/16W
R102	1-216-821-11	s	METAL, CHIP 1K 5% 1/16W
R104	1-216-833-11	s	METAL, CHIP 10K 5% 1/16W
R106	1-216-817-11	s	METAL, CHIP 470 5% 1/16W
R107	1-216-821-11	s	METAL, CHIP 1K 5% 1/16W
R108	1-216-809-11	s	METAL, CHIP 100 5% 1/16W
R109	1-216-830-11	s	METAL, CHIP 5.6K 5% 1/16W
R111	1-216-838-11	s	METAL, CHIP 27K 5% 1/16W
R112	1-216-841-11	s	METAL, CHIP 47K 5% 1/16W
R113	1-216-830-11	s	METAL, CHIP 5.6K 5% 1/16W
R114	1-216-833-11	s	METAL, CHIP 10K 5% 1/16W
R115	1-216-844-11	s	METAL, CHIP 82K 5% 1/16W
R116	1-216-833-11	s	METAL, CHIP 10K 5% 1/16W
R118	1-216-845-11	s	METAL, CHIP 100K 5% 1/16W
R123	1-216-833-11	s	METAL, CHIP 10K 5% 1/16W
R124	1-216-841-11	s	METAL, CHIP 47K 5% 1/16W
R128	1-216-809-11	s	METAL, CHIP 100 5% 1/16W
R130	1-216-821-11	s	METAL, CHIP 1K 5% 1/16W
R131	1-216-833-11	s	METAL, CHIP 10K 5% 1/16W

(SST-2 BOARD)

Ref. No. or Q'ty	Part No.	SP	Description
R132	1-216-833-11	s	METAL, CHIP 10K 5% 1/16W
R133	1-216-833-11	s	METAL, CHIP 10K 5% 1/16W
R134	1-216-833-11	s	METAL, CHIP 10K 5% 1/16W
R135	1-216-833-11	s	METAL, CHIP 10K 5% 1/16W
R136	1-216-833-11	s	METAL, CHIP 10K 5% 1/16W
R137	1-216-833-11	s	METAL, CHIP 10K 5% 1/16W
R139	1-216-821-11	s	METAL, CHIP 1K 5% 1/16W
R142	1-216-821-11	s	METAL, CHIP 1K 5% 1/16W
R143	1-216-821-11	s	METAL, CHIP 1K 5% 1/16W
R144	1-216-821-11	s	METAL, CHIP 1K 5% 1/16W
R145	1-216-821-11	s	METAL, CHIP 1K 5% 1/16W
R146	1-216-821-11	s	METAL, CHIP 1K 5% 1/16W
R147	1-216-821-11	s	METAL, CHIP 1K 5% 1/16W
R148	1-216-821-11	s	METAL, CHIP 1K 5% 1/16W
R149	1-216-821-11	s	METAL, CHIP 1K 5% 1/16W
R150	1-216-821-11	s	METAL, CHIP 1K 5% 1/16W
R151	1-216-821-11	s	METAL, CHIP 1K 5% 1/16W
R152	1-216-864-11	s	METAL, CHIP 0 5% 1/16W
R155	1-216-864-11	s	METAL, CHIP 0 5% 1/16W
R156	1-216-864-11	s	METAL, CHIP 0 5% 1/16W
R157	1-216-837-11	s	METAL, CHIP 22K 5% 1/16W
R158	1-216-837-11	s	METAL, CHIP 22K 5% 1/16W
R159	1-216-837-11	s	METAL, CHIP 22K 5% 1/16W
R160	1-216-837-11	s	METAL, CHIP 22K 5% 1/16W
R161	1-216-837-11	s	METAL, CHIP 22K 5% 1/16W
R162	1-216-837-11	s	METAL, CHIP 22K 5% 1/16W
R163	1-216-837-11	s	METAL, CHIP 22K 5% 1/16W
R164	1-216-837-11	s	METAL, CHIP 22K 5% 1/16W
R165	1-216-833-11	s	METAL, CHIP 10K 5% 1/16W
R166	1-216-833-11	s	METAL, CHIP 10K 5% 1/16W
R167	1-216-833-11	s	METAL, CHIP 10K 5% 1/16W
R168	1-216-833-11	s	METAL, CHIP 10K 5% 1/16W
R169	1-216-833-11	s	METAL, CHIP 10K 5% 1/16W
R170	1-216-833-11	s	METAL, CHIP 10K 5% 1/16W
R171	1-216-833-11	s	METAL, CHIP 10K 5% 1/16W
R172	1-216-833-11	s	METAL, CHIP 10K 5% 1/16W
R173	1-216-833-11	s	METAL, CHIP 10K 5% 1/16W
R174	1-216-833-11	s	METAL, CHIP 10K 5% 1/16W
R175	1-216-833-11	s	METAL, CHIP 10K 5% 1/16W
R176	1-216-833-11	s	METAL, CHIP 10K 5% 1/16W
R177	1-216-833-11	s	METAL, CHIP 10K 5% 1/16W
R178	1-216-833-11	s	METAL, CHIP 10K 5% 1/16W
R179	1-216-833-11	s	METAL, CHIP 10K 5% 1/16W
R180	1-216-833-11	s	METAL, CHIP 10K 5% 1/16W
R182	1-216-841-11	s	METAL, CHIP 47K 5% 1/16W
R183	1-216-841-11	s	METAL, CHIP 47K 5% 1/16W
R184	1-216-841-11	s	METAL, CHIP 47K 5% 1/16W
R185	1-216-841-11	s	METAL, CHIP 47K 5% 1/16W
R186	1-216-841-11	s	METAL, CHIP 47K 5% 1/16W
R189	1-216-833-11	s	METAL, CHIP 10K 5% 1/16W
R190	1-216-833-11	s	METAL, CHIP 10K 5% 1/16W
R191	1-216-833-11	s	METAL, CHIP 10K 5% 1/16W
R192	1-216-833-11	s	METAL, CHIP 10K 5% 1/16W
R193	1-216-833-11	s	METAL, CHIP 10K 5% 1/16W
R194	1-216-833-11	s	METAL, CHIP 10K 5% 1/16W
R195	1-216-833-11	s	METAL, CHIP 10K 5% 1/16W
R196	1-216-833-11	s	METAL, CHIP 10K 5% 1/16W
R197	1-216-833-11	s	METAL, CHIP 10K 5% 1/16W
R198	1-216-833-11	s	METAL, CHIP 10K 5% 1/16W

(SST-2 BOARD)

Ref. No. or Q'ty	Part No.	SP	Description
R199	1-216-833-11	s	METAL, CHIP 10K 5% 1/16W
R201	1-216-833-11	s	METAL, CHIP 10K 5% 1/16W
R202	1-216-841-11	s	METAL, CHIP 47K 5% 1/16W
R204	1-216-833-11	s	METAL, CHIP 10K 5% 1/16W
R206	1-216-809-11	s	METAL, CHIP 100 5% 1/16W
R207	1-216-821-11	s	METAL, CHIP 1K 5% 1/16W
R208	1-216-845-11	s	METAL, CHIP 100K 5% 1/16W
R210	1-216-833-11	s	METAL, CHIP 10K 5% 1/16W
R212	1-216-829-11	s	METAL, CHIP 4.7K 5% 1/16W
R213	1-216-841-11	s	METAL, CHIP 47K 5% 1/16W
R214	1-216-809-11	s	METAL, CHIP 100 5% 1/16W
R215	1-216-833-11	s	METAL, CHIP 10K 5% 1/16W
R216	1-216-837-11	s	METAL, CHIP 22K 5% 1/16W
R218	1-216-821-11	s	METAL, CHIP 1K 5% 1/16W
R222	1-216-833-11	s	METAL, CHIP 10K 5% 1/16W
R223	1-216-821-11	s	METAL, CHIP 1K 5% 1/16W
R225	1-216-841-11	s	METAL, CHIP 47K 5% 1/16W
R236	1-216-821-11	s	METAL, CHIP 1K 5% 1/16W
R237	1-216-821-11	s	METAL, CHIP 1K 5% 1/16W
R238	1-216-809-11	s	METAL, CHIP 100 5% 1/16W
R239	1-216-837-11	s	METAL, CHIP 22K 5% 1/16W
R240	1-216-833-11	s	METAL, CHIP 10K 5% 1/16W
R241	1-216-845-11	s	METAL, CHIP 100K 5% 1/16W
R242	1-216-837-11	s	METAL, CHIP 22K 5% 1/16W
R243	1-216-833-11	s	METAL, CHIP 10K 5% 1/16W
R244	1-216-845-11	s	METAL, CHIP 100K 5% 1/16W
R245	1-216-841-11	s	METAL, CHIP 47K 5% 1/16W
R246	1-216-841-11	s	METAL, CHIP 47K 5% 1/16W
R247	1-216-841-11	s	METAL, CHIP 47K 5% 1/16W
R248	1-216-841-11	s	METAL, CHIP 47K 5% 1/16W
R249	1-216-841-11	s	METAL, CHIP 47K 5% 1/16W
R250	1-216-809-11	s	METAL, CHIP 100 5% 1/16W
R251	1-216-841-11	s	METAL, CHIP 47K 5% 1/16W
R252	1-216-841-11	s	METAL, CHIP 47K 5% 1/16W
R253	1-216-845-11	s	METAL, CHIP 100K 5% 1/16W
R254	1-216-841-11	s	METAL, CHIP 47K 5% 1/16W
R255	1-216-841-11	s	METAL, CHIP 47K 5% 1/16W
R256	1-216-841-11	s	METAL, CHIP 47K 5% 1/16W
R257	1-216-841-11	s	METAL, CHIP 47K 5% 1/16W
R258	1-216-841-11	s	METAL, CHIP 47K 5% 1/16W
R259	1-216-841-11	s	METAL, CHIP 47K 5% 1/16W
R260	1-216-864-11	s	METAL, CHIP 0 5% 1/16W
R261	1-216-841-11	s	METAL, CHIP 47K 5% 1/16W
R262	1-216-833-11	s	METAL, CHIP 10K 5% 1/16W
R263	1-216-829-11	s	METAL, CHIP 4.7K 5% 1/16W
R265	1-216-845-11	s	METAL, CHIP 100K 5% 1/16W
R270	1-216-821-11	s	METAL, CHIP 1K 5% 1/16W
R271	1-216-821-11	s	METAL, CHIP 1K 5% 1/16W
R272	1-216-821-11	s	METAL, CHIP 1K 5% 1/16W
R273	1-216-819-11	s	METAL, CHIP 680 5% 1/16W
R274	1-216-841-11	s	METAL, CHIP 47K 5% 1/16W
R275	1-216-841-11	s	METAL, CHIP 47K 5% 1/16W
R276	1-216-829-11	s	METAL, CHIP 4.7K 5% 1/16W
R277	1-216-841-11	s	METAL, CHIP 47K 5% 1/16W
R278	1-216-811-11	s	METAL, CHIP 150 5% 1/16W
R279	1-216-805-11	s	METAL, CHIP 47 5% 1/16W
R280	1-216-841-11	s	METAL, CHIP 47K 5% 1/16W
R281	1-216-829-11	s	METAL, CHIP 4.7K 5% 1/16W
R282	1-216-829-11	s	METAL, CHIP 4.7K 5% 1/16W

(SST-2 BOARD)

Ref. No. or Q'ty	Part No.	SP	Description
R283	1-216-841-11	s	METAL, CHIP 47K 5% 1/16W
R284	1-216-841-11	s	METAL, CHIP 47K 5% 1/16W
R285	1-216-818-11	s	METAL, CHIP 560 5% 1/16W
R286	1-216-821-11	s	METAL, CHIP 1K 5% 1/16W
R287	1-216-841-11	s	METAL, CHIP 47K 5% 1/16W
R288	1-216-821-11	s	METAL, CHIP 1K 5% 1/16W
R289	1-216-821-11	s	METAL, CHIP 1K 5% 1/16W
R290	1-216-821-11	s	METAL, CHIP 1K 5% 1/16W
R291	1-216-821-11	s	METAL, CHIP 1K 5% 1/16W
R292	1-216-821-11	s	METAL, CHIP 1K 5% 1/16W
R293	1-216-821-11	s	METAL, CHIP 1K 5% 1/16W
R294	1-216-821-11	s	METAL, CHIP 1K 5% 1/16W
R295	1-216-821-11	s	METAL, CHIP 1K 5% 1/16W
R296	1-216-821-11	s	METAL, CHIP 1K 5% 1/16W
R297	1-216-821-11	s	METAL, CHIP 1K 5% 1/16W
R298	1-216-809-11	s	METAL, CHIP 100 5% 1/16W
R301	1-216-833-11	s	METAL, CHIP 10K 5% 1/16W
R302	1-216-833-11	s	METAL, CHIP 10K 5% 1/16W
R305	1-216-841-11	s	METAL, CHIP 47K 5% 1/16W
R306	1-216-821-11	s	METAL, CHIP 1K 5% 1/16W
R307	1-216-821-11	s	METAL, CHIP 1K 5% 1/16W
R308	1-216-833-11	s	METAL, CHIP 10K 5% 1/16W
R309	1-216-833-11	s	METAL, CHIP 10K 5% 1/16W
R310	1-216-817-11	s	METAL, CHIP 470 5% 1/16W
R311	1-216-845-11	s	METAL, CHIP 100K 5% 1/16W
R312	⚠1-207-653-00	s	WIREWOUND 22 5% 3W
R350	1-216-841-11	s	METAL, CHIP 47K 5% 1/16W
R351	1-216-841-11	s	METAL, CHIP 47K 5% 1/16W
R352	1-216-841-11	s	METAL, CHIP 47K 5% 1/16W
R353	1-216-841-11	s	METAL, CHIP 47K 5% 1/16W
R354	1-216-841-11	s	METAL, CHIP 47K 5% 1/16W
R355	1-216-841-11	s	METAL, CHIP 47K 5% 1/16W
R356	1-216-841-11	s	METAL, CHIP 47K 5% 1/16W
R357	1-216-841-11	s	METAL, CHIP 47K 5% 1/16W
R358	1-216-821-11	s	METAL, CHIP 1K 5% 1/16W
R359	1-216-821-11	s	METAL, CHIP 1K 5% 1/16W
R360	1-216-821-11	s	METAL, CHIP 1K 5% 1/16W
R361	1-216-821-11	s	METAL, CHIP 1K 5% 1/16W
R362	1-216-821-11	s	METAL, CHIP 1K 5% 1/16W
R363	1-216-821-11	s	METAL, CHIP 1K 5% 1/16W
R364	1-216-821-11	s	METAL, CHIP 1K 5% 1/16W
R365	1-216-841-11	s	METAL, CHIP 47K 5% 1/16W
R366	1-216-821-11	s	METAL, CHIP 1K 5% 1/16W
R367	1-216-821-11	s	METAL, CHIP 1K 5% 1/16W
R374	1-216-833-11	s	METAL, CHIP 10K 5% 1/16W
R375	1-216-833-11	s	METAL, CHIP 10K 5% 1/16W
R376	1-216-833-11	s	METAL, CHIP 10K 5% 1/16W
R377	1-216-833-11	s	METAL, CHIP 10K 5% 1/16W
R378	1-216-839-11	s	METAL, CHIP 33K 5% 1/16W
R379	1-216-841-11	s	METAL, CHIP 47K 5% 1/16W
R380	1-216-841-11	s	METAL, CHIP 47K 5% 1/16W
R382	1-216-827-11	s	METAL, CHIP 3.3K 5% 1/16W
R383	1-216-833-11	s	METAL, CHIP 10K 5% 1/16W
R386	1-216-841-11	s	METAL, CHIP 47K 5% 1/16W
R387	1-216-835-11	s	METAL, CHIP 15K 5% 1/16W
R388	1-216-821-11	s	METAL, CHIP 1K 5% 1/16W
R389	1-216-837-11	s	METAL, CHIP 22K 5% 1/16W
R390	1-216-829-11	s	METAL, CHIP 4.7K 5% 1/16W
R401	1-216-821-11	s	METAL, CHIP 1K 5% 1/16W

(SST-2 BOARD)

Ref. No. or Q'ty	Part No.	SP	Description
R402	1-216-821-11	s	METAL, CHIP 1K 5% 1/16W
R403	1-216-821-11	s	METAL, CHIP 1K 5% 1/16W
R404	1-216-833-11	s	METAL, CHIP 10K 5% 1/16W
R405	1-216-821-11	s	METAL, CHIP 1K 5% 1/16W
R406	1-216-833-11	s	METAL, CHIP 10K 5% 1/16W
R407	1-216-833-11	s	METAL, CHIP 10K 5% 1/16W
R408	1-216-833-11	s	METAL, CHIP 10K 5% 1/16W
R409	1-216-821-11	s	METAL, CHIP 1K 5% 1/16W
R410	1-216-833-11	s	METAL, CHIP 10K 5% 1/16W
R411	1-216-833-11	s	METAL, CHIP 10K 5% 1/16W
R412	1-216-821-11	s	METAL, CHIP 1K 5% 1/16W
R413	1-216-821-11	s	METAL, CHIP 1K 5% 1/16W
R414	1-216-833-11	s	METAL, CHIP 10K 5% 1/16W
R415	1-216-833-11	s	METAL, CHIP 10K 5% 1/16W
R416	1-216-833-11	s	METAL, CHIP 10K 5% 1/16W
R417	1-216-833-11	s	METAL, CHIP 10K 5% 1/16W
R418	1-216-833-11	s	METAL, CHIP 10K 5% 1/16W
R419	1-216-833-11	s	METAL, CHIP 10K 5% 1/16W
R420	1-216-833-11	s	METAL, CHIP 10K 5% 1/16W
R421	1-216-833-11	s	METAL, CHIP 10K 5% 1/16W
R422	1-216-833-11	s	METAL, CHIP 10K 5% 1/16W
R423	1-216-837-11	s	METAL, CHIP 22K 5% 1/16W
R424	1-216-837-11	s	METAL, CHIP 22K 5% 1/16W
R425	1-216-841-11	s	METAL, CHIP 47K 5% 1/16W
R426	1-216-832-11	s	METAL, CHIP 8.2K 5% 1/16W
R427	1-216-829-11	s	METAL, CHIP 4.7K 5% 1/16W
R428	1-216-837-11	s	METAL, CHIP 22K 5% 1/16W
R429	1-216-837-11	s	METAL, CHIP 22K 5% 1/16W
R430	1-216-829-11	s	METAL, CHIP 4.7K 5% 1/16W
R431	1-216-827-11	s	METAL, CHIP 3.3K 5% 1/16W
R432	1-216-821-11	s	METAL, CHIP 1K 5% 1/16W
R434	1-216-829-11	s	METAL, CHIP 4.7K 5% 1/16W
R435	1-216-821-11	s	METAL, CHIP 1K 5% 1/16W
R436	1-216-821-11	s	METAL, CHIP 1K 5% 1/16W
R437	1-216-821-11	s	METAL, CHIP 1K 5% 1/16W
R438	1-216-821-11	s	METAL, CHIP 1K 5% 1/16W
R439	1-216-821-11	s	METAL, CHIP 1K 5% 1/16W
R440	1-216-821-11	s	METAL, CHIP 1K 5% 1/16W
R442	1-216-821-11	s	METAL, CHIP 1K 5% 1/16W
R443	1-216-821-11	s	METAL, CHIP 1K 5% 1/16W
R444	1-216-821-11	s	METAL, CHIP 1K 5% 1/16W
R447	1-216-833-11	s	METAL, CHIP 10K 5% 1/16W
R448	1-216-821-11	s	METAL, CHIP 1K 5% 1/16W
R453	1-216-821-11	s	METAL, CHIP 1K 5% 1/16W
R454	1-216-821-11	s	METAL, CHIP 1K 5% 1/16W
R455	1-216-821-11	s	METAL, CHIP 1K 5% 1/16W
R474	1-216-849-11	s	METAL, CHIP 220K 5% 1/16W
R475	1-216-844-11	s	METAL, CHIP 82K 5% 1/16W
R476	1-216-833-11	s	METAL, CHIP 10K 5% 1/16W
R477	1-216-821-11	s	METAL, CHIP 1K 5% 1/16W
R478	1-216-821-11	s	METAL, CHIP 1K 5% 1/16W
R479	1-216-841-11	s	METAL, CHIP 47K 5% 1/16W
R480	1-216-841-11	s	METAL, CHIP 47K 5% 1/16W
R481	1-216-841-11	s	METAL, CHIP 47K 5% 1/16W
R482	1-216-841-11	s	METAL, CHIP 47K 5% 1/16W
R483	1-216-821-11	s	METAL, CHIP 1K 5% 1/16W
R485	1-247-891-00	s	CARBON 330K 5% 1/4W
R501	1-216-821-11	s	METAL, CHIP 1K 5% 1/16W
R502	1-216-821-11	s	METAL, CHIP 1K 5% 1/16W

(SST-2 BOARD)

Ref. No. or Q'ty	Part No.	SP	Description
R503	1-216-821-11	s	METAL, CHIP 1K 5% 1/16W
R504	1-216-821-11	s	METAL, CHIP 1K 5% 1/16W
R505	1-216-821-11	s	METAL, CHIP 1K 5% 1/16W
R506	1-216-821-11	s	METAL, CHIP 1K 5% 1/16W
R507	1-216-841-11	s	METAL, CHIP 47K 5% 1/16W
R508	1-216-841-11	s	METAL, CHIP 47K 5% 1/16W
R509	1-216-839-11	s	METAL, CHIP 33K 5% 1/16W
R510	1-216-839-11	s	METAL, CHIP 33K 5% 1/16W
R511	1-216-841-11	s	METAL, CHIP 47K 5% 1/16W
R512	1-216-841-11	s	METAL, CHIP 47K 5% 1/16W
R514	1-216-841-11	s	METAL, CHIP 47K 5% 1/16W
R515	1-216-841-11	s	METAL, CHIP 47K 5% 1/16W
R516	1-216-841-11	s	METAL, CHIP 47K 5% 1/16W
R518	1-216-821-11	s	METAL, CHIP 1K 5% 1/16W
R519	1-216-821-11	s	METAL, CHIP 1K 5% 1/16W
R520	1-216-821-11	s	METAL, CHIP 1K 5% 1/16W
R521	1-216-841-11	s	METAL, CHIP 47K 5% 1/16W
R522	1-216-809-11	s	METAL, CHIP 100 5% 1/16W
R523	1-216-833-11	s	METAL, CHIP 10K 5% 1/16W
R524	1-216-833-11	s	METAL, CHIP 10K 5% 1/16W
R525	1-216-817-11	s	METAL, CHIP 470 5% 1/16W
R526	1-216-809-11	s	METAL, CHIP 100 5% 1/16W
R527	1-216-841-11	s	METAL, CHIP 47K 5% 1/16W
R528	1-216-841-11	s	METAL, CHIP 47K 5% 1/16W
R529	1-216-841-11	s	METAL, CHIP 47K 5% 1/16W
R530	1-216-841-11	s	METAL, CHIP 47K 5% 1/16W
R531	1-216-841-11	s	METAL, CHIP 47K 5% 1/16W
R533	1-216-821-11	s	METAL, CHIP 1K 5% 1/16W
R534	1-216-821-11	s	METAL, CHIP 1K 5% 1/16W
R535	1-216-841-11	s	METAL, CHIP 47K 5% 1/16W
R536	1-216-841-11	s	METAL, CHIP 47K 5% 1/16W
R537	1-216-841-11	s	METAL, CHIP 47K 5% 1/16W
R541	1-216-833-11	s	METAL, CHIP 10K 5% 1/16W
R542	1-216-839-11	s	METAL, CHIP 33K 5% 1/16W
R543	1-218-733-11	s	METAL, CHIP 51K 0.50% 1/16W
R544	1-218-723-11	s	METAL, CHIP 20K 0.50% 1/16W
R545	1-218-723-11	s	METAL, CHIP 20K 0.50% 1/16W
R546	1-218-723-11	s	METAL, CHIP 20K 0.50% 1/16W
R547	1-218-723-11	s	METAL, CHIP 20K 0.50% 1/16W
R548	1-218-723-11	s	METAL, CHIP 20K 0.50% 1/16W
R549	1-218-723-11	s	METAL, CHIP 20K 0.50% 1/16W
R550	1-218-723-11	s	METAL, CHIP 20K 0.50% 1/16W
R551	1-218-723-11	s	METAL, CHIP 20K 0.50% 1/16W
R552	1-218-723-11	s	METAL, CHIP 20K 0.50% 1/16W
R553	1-216-833-11	s	METAL, CHIP 10K 5% 1/16W
R554	1-216-833-11	s	METAL, CHIP 10K 5% 1/16W
R555	1-216-833-11	s	METAL, CHIP 10K 5% 1/16W
R556	1-216-833-11	s	METAL, CHIP 10K 5% 1/16W
R557	1-216-833-11	s	METAL, CHIP 10K 5% 1/16W
R558	1-216-833-11	s	METAL, CHIP 10K 5% 1/16W
R559	1-216-833-11	s	METAL, CHIP 10K 5% 1/16W
R560	1-216-841-11	s	METAL, CHIP 47K 5% 1/16W
R561	1-216-821-11	s	METAL, CHIP 1K 5% 1/16W
R562	1-216-821-11	s	METAL, CHIP 1K 5% 1/16W
R563	1-216-833-11	s	METAL, CHIP 10K 5% 1/16W
R564	1-216-833-11	s	METAL, CHIP 10K 5% 1/16W
R565	1-216-833-11	s	METAL, CHIP 10K 5% 1/16W
R566	1-216-833-11	s	METAL, CHIP 10K 5% 1/16W
R567	1-216-833-11	s	METAL, CHIP 10K 5% 1/16W

(SST-2 BOARD)

Ref. No. or Q'ty	Part No.	SP	Description
R568	1-216-833-11	s	METAL, CHIP 10K 5% 1/16W
R569	1-216-821-11	s	METAL, CHIP 1K 5% 1/16W
R570	1-216-821-11	s	METAL, CHIP 1K 5% 1/16W
R571	1-216-833-11	s	METAL, CHIP 10K 5% 1/16W
R572	1-216-833-11	s	METAL, CHIP 10K 5% 1/16W
R573	1-216-833-11	s	METAL, CHIP 10K 5% 1/16W
R574	1-216-833-11	s	METAL, CHIP 10K 5% 1/16W
R575	1-216-833-11	s	METAL, CHIP 10K 5% 1/16W
R576	1-216-833-11	s	METAL, CHIP 10K 5% 1/16W
R577	1-216-833-11	s	METAL, CHIP 10K 5% 1/16W
R578	1-216-833-11	s	METAL, CHIP 10K 5% 1/16W
R579	1-216-833-11	s	METAL, CHIP 10K 5% 1/16W
R580	1-216-818-11	s	METAL, CHIP 560 5% 1/16W
R581	1-216-839-11	s	METAL, CHIP 33K 5% 1/16W
R582	1-216-840-11	s	METAL, CHIP 39K 5% 1/16W
R583	1-216-849-11	s	METAL, CHIP 220K 5% 1/16W
R584	1-216-843-11	s	METAL, CHIP 68K 5% 1/16W
R585	1-216-825-11	s	METAL, CHIP 2.2K 5% 1/16W
R586	1-216-842-11	s	METAL, CHIP 56K 5% 1/16W
R587	1-216-834-11	s	METAL, CHIP 12K 5% 1/16W
R588	1-216-835-11	s	METAL, CHIP 15K 5% 1/16W
R589	1-216-845-11	s	METAL, CHIP 100K 5% 1/16W
R590	1-216-833-11	s	METAL, CHIP 10K 5% 1/16W
R591	1-216-809-11	s	METAL, CHIP 100 5% 1/16W
R592	1-216-809-11	s	METAL, CHIP 100 5% 1/16W
R593	1-216-809-11	s	METAL, CHIP 100 5% 1/16W
R594	1-216-809-11	s	METAL, CHIP 100 5% 1/16W
R595	1-216-833-11	s	METAL, CHIP 10K 5% 1/16W
R597	1-216-833-11	s	METAL, CHIP 10K 5% 1/16W
R601	1-216-809-11	s	METAL, CHIP 100 5% 1/16W
R602	1-216-821-11	s	METAL, CHIP 1K 5% 1/16W
R603	1-216-833-11	s	METAL, CHIP 10K 5% 1/16W
R604	1-216-845-11	s	METAL, CHIP 100K 5% 1/16W
R605	1-216-833-11	s	METAL, CHIP 10K 5% 1/16W
R606	1-216-831-11	s	METAL, CHIP 6.8K 5% 1/16W
R607	1-216-853-11	s	METAL, CHIP 470K 5% 1/16W
R608	1-216-829-11	s	METAL, CHIP 4.7K 5% 1/16W
R609	1-216-833-11	s	METAL, CHIP 10K 5% 1/16W
R610	1-216-847-11	s	METAL, CHIP 150K 5% 1/16W
R611	1-216-822-11	s	METAL, CHIP 1.2K 5% 1/16W
R612	1-216-841-11	s	METAL, CHIP 47K 5% 1/16W
R613	1-216-845-11	s	METAL, CHIP 100K 5% 1/16W
R614	1-216-838-11	s	METAL, CHIP 27K 5% 1/16W
R615	1-216-851-11	s	METAL, CHIP 330K 5% 1/16W
R616	1-216-846-11	s	METAL, CHIP 120K 5% 1/16W
R617	1-216-820-11	s	METAL, CHIP 820 5% 1/16W
R618	1-216-833-11	s	METAL, CHIP 10K 5% 1/16W
R619	1-216-819-11	s	METAL, CHIP 680 5% 1/16W
R620	1-216-812-11	s	METAL, CHIP 180 5% 1/16W
R621	1-216-857-11	s	METAL, CHIP 1M 5% 1/16W
R622	1-216-838-11	s	METAL, CHIP 27K 5% 1/16W
R623	1-216-839-11	s	METAL, CHIP 33K 5% 1/16W
R624	1-216-856-11	s	METAL, CHIP 820K 5% 1/16W
R625	1-216-847-11	s	METAL, CHIP 150K 5% 1/16W
R626	1-216-830-11	s	METAL, CHIP 5.6K 5% 1/16W
R627	1-216-845-11	s	METAL, CHIP 100K 5% 1/16W
R628	1-216-833-11	s	METAL, CHIP 10K 5% 1/16W
R629	1-216-840-11	s	METAL, CHIP 39K 5% 1/16W
R630	1-216-809-11	s	METAL, CHIP 100 5% 1/16W

(SST-2 BOARD)

Ref. No. or Q'ty	Part No.	SP	Description
R631	1-216-845-11	s	METAL, CHIP 100K 5% 1/16W
R632	1-216-841-11	s	METAL, CHIP 47K 5% 1/16W
R633	1-216-829-11	s	METAL, CHIP 4.7K 5% 1/16W
R634	1-216-833-11	s	METAL, CHIP 10K 5% 1/16W
R635	1-216-833-11	s	METAL, CHIP 10K 5% 1/16W
R636	1-216-809-11	s	METAL, CHIP 100 5% 1/16W
R637	1-216-842-11	s	METAL, CHIP 56K 5% 1/16W
R638	1-216-833-11	s	METAL, CHIP 10K 5% 1/16W
R639	1-216-853-11	s	METAL, CHIP 470K 5% 1/16W
R640	1-216-839-11	s	METAL, CHIP 33K 5% 1/16W
R641	1-216-833-11	s	METAL, CHIP 10K 5% 1/16W
R642	1-216-833-11	s	METAL, CHIP 10K 5% 1/16W
R643	1-216-841-11	s	METAL, CHIP 47K 5% 1/16W
R645	1-216-821-11	s	METAL, CHIP 1K 5% 1/16W
R646	1-216-833-11	s	METAL, CHIP 10K 5% 1/16W
R647	1-216-833-11	s	METAL, CHIP 10K 5% 1/16W
R648	1-218-272-11	s	METAL, CHIP 5.1K 5% 1/16W
R649	1-216-853-11	s	METAL, CHIP 470K 5% 1/16W
R650	1-216-839-11	s	METAL, CHIP 33K 5% 1/16W
R651	1-216-833-11	s	METAL, CHIP 10K 5% 1/16W
R652	1-216-821-11	s	METAL, CHIP 1K 5% 1/16W
R653	1-216-833-11	s	METAL, CHIP 10K 5% 1/16W
R654	1-216-841-11	s	METAL, CHIP 47K 5% 1/16W
R656	1-216-821-11	s	METAL, CHIP 1K 5% 1/16W
R657	1-216-841-11	s	METAL, CHIP 47K 5% 1/16W
R658	1-218-727-11	s	METAL, CHIP 30K 0.50% 1/16W
R659	1-216-829-11	s	METAL, CHIP 4.7K 5% 1/16W
R660	1-216-820-11	s	METAL, CHIP 820 5% 1/16W
R661	1-216-846-11	s	METAL, CHIP 120K 5% 1/16W
R662	1-216-833-11	s	METAL, CHIP 10K 5% 1/16W
R663	1-216-854-11	s	METAL, CHIP 560K 5% 1/16W
R664	1-216-837-11	s	METAL, CHIP 22K 5% 1/16W
R665	1-216-845-11	s	METAL, CHIP 100K 5% 1/16W
R668	1-216-854-11	s	METAL, CHIP 560K 5% 1/16W
R669	1-216-837-11	s	METAL, CHIP 22K 5% 1/16W
R670	1-216-845-11	s	METAL, CHIP 100K 5% 1/16W
R671	1-216-831-11	s	METAL, CHIP 6.8K 5% 1/16W
R674	1-216-809-11	s	METAL, CHIP 100 5% 1/16W
R675	1-216-821-11	s	METAL, CHIP 1K 5% 1/16W
R676	1-216-805-11	s	METAL, CHIP 47 5% 1/16W
R701	1-216-819-11	s	METAL, CHIP 680 5% 1/16W
R702	1-216-819-11	s	METAL, CHIP 680 5% 1/16W
R704	1-216-839-11	s	METAL, CHIP 33K 5% 1/16W
R705	1-216-836-11	s	METAL, CHIP 18K 5% 1/16W
R706	1-216-839-11	s	METAL, CHIP 33K 5% 1/16W
R707	1-216-821-11	s	METAL, CHIP 1K 5% 1/16W
R708	1-216-839-11	s	METAL, CHIP 33K 5% 1/16W
R709	1-216-840-11	s	METAL, CHIP 39K 5% 1/16W
R710	1-216-814-11	s	METAL, CHIP 270 5% 1/16W
R711	1-216-814-11	s	METAL, CHIP 270 5% 1/16W
R712	1-216-812-11	s	METAL, CHIP 180 5% 1/16W
R713	1-216-825-11	s	METAL, CHIP 2.2K 5% 1/16W
R714	1-216-833-11	s	METAL, CHIP 10K 5% 1/16W
R715	1-216-817-11	s	METAL, CHIP 470 5% 1/16W
R716	1-216-817-11	s	METAL, CHIP 470 5% 1/16W
R717	1-216-841-11	s	METAL, CHIP 47K 5% 1/16W
R718	1-216-833-11	s	METAL, CHIP 10K 5% 1/16W
R719	1-216-857-11	s	METAL, CHIP 1M 5% 1/16W
R720	1-216-837-11	s	METAL, CHIP 22K 5% 1/16W

(SST-2 BOARD)

Ref. No. or Q'ty	Part No.	SP	Description
R721	1-216-832-11	s	METAL, CHIP 8.2K 5% 1/16W
R722	1-216-831-11	s	METAL, CHIP 6.8K 5% 1/16W
R723	1-216-827-11	s	METAL, CHIP 3.3K 5% 1/16W
R724	1-216-827-11	s	METAL, CHIP 3.3K 5% 1/16W
R725	1-216-827-11	s	METAL, CHIP 3.3K 5% 1/16W
R726	1-216-829-11	s	METAL, CHIP 4.7K 5% 1/16W
R727	1-216-827-11	s	METAL, CHIP 3.3K 5% 1/16W
R728	1-216-829-11	s	METAL, CHIP 4.7K 5% 1/16W
R729	1-216-820-11	s	METAL, CHIP 820 5% 1/16W
R730	1-216-857-11	s	METAL, CHIP 1M 5% 1/16W
R731	1-216-833-11	s	METAL, CHIP 10K 5% 1/16W
R732	1-216-833-11	s	METAL, CHIP 10K 5% 1/16W
R733	1-216-833-11	s	METAL, CHIP 10K 5% 1/16W
R734	1-216-833-11	s	METAL, CHIP 10K 5% 1/16W
R735	1-216-821-11	s	METAL, CHIP 1K 5% 1/16W
R736	1-216-821-11	s	METAL, CHIP 1K 5% 1/16W
R737	1-216-819-11	s	METAL, CHIP 680 5% 1/16W
R738	1-216-819-11	s	METAL, CHIP 680 5% 1/16W
R739	1-216-819-11	s	METAL, CHIP 680 5% 1/16W
R740	1-216-839-11	s	METAL, CHIP 33K 5% 1/16W
R741	1-216-831-11	s	METAL, CHIP 6.8K 5% 1/16W
R742	1-216-837-11	s	METAL, CHIP 22K 5% 1/16W
R743	1-216-822-11	s	METAL, CHIP 1.2K 5% 1/16W
R744	1-216-821-11	s	METAL, CHIP 1K 5% 1/16W
R745	1-216-825-11	s	METAL, CHIP 2.2K 5% 1/16W
R746	1-216-820-11	s	METAL, CHIP 820 5% 1/16W
R747	1-216-815-11	s	METAL, CHIP 330 5% 1/16W
R748	1-216-813-11	s	METAL, CHIP 220 5% 1/16W
R749	1-216-814-11	s	METAL, CHIP 270 5% 1/16W
R750	1-216-817-11	s	METAL, CHIP 470 5% 1/16W
R751	1-216-835-11	s	METAL, CHIP 15K 5% 1/16W
R752	1-216-833-11	s	METAL, CHIP 10K 5% 1/16W
R753	1-216-821-11	s	METAL, CHIP 1K 5% 1/16W
R754	1-216-819-11	s	METAL, CHIP 680 5% 1/16W
R755	1-216-841-11	s	METAL, CHIP 47K 5% 1/16W
R756	1-216-837-11	s	METAL, CHIP 22K 5% 1/16W
R757	1-216-829-11	s	METAL, CHIP 4.7K 5% 1/16W
R758	1-216-836-11	s	METAL, CHIP 18K 5% 1/16W
R759	1-216-807-11	s	METAL, CHIP 68 5% 1/16W
R801	1-216-849-11	s	METAL, CHIP 220K 5% 1/16W
R802	1-216-849-11	s	METAL, CHIP 220K 5% 1/16W
R803	1-216-845-11	s	METAL, CHIP 100K 5% 1/16W
R804	1-216-845-11	s	METAL, CHIP 100K 5% 1/16W
R805	1-216-833-11	s	METAL, CHIP 10K 5% 1/16W
R806	1-216-806-11	s	METAL, CHIP 56 5% 1/16W
R807	1-218-289-11	s	METAL, CHIP 510 5% 1/16W
R808	1-218-707-11	s	METAL, CHIP 4.3K 0.50% 1/16W
R809	1-216-821-11	s	METAL, CHIP 1K 5% 1/16W
R810	1-216-822-11	s	METAL, CHIP 1.2K 5% 1/16W
R811	1-216-822-11	s	METAL, CHIP 1.2K 5% 1/16W
R812	1-218-720-11	s	METAL, CHIP 15K 0.50% 1/16W
R813	1-218-720-11	s	METAL, CHIP 15K 0.50% 1/16W
R814	1-218-751-11	s	METAL, CHIP 300K 0.50% 1/16W
R815	1-218-751-11	s	METAL, CHIP 300K 0.50% 1/16W
R816	1-216-843-11	s	METAL, CHIP 68K 5% 1/16W
R817	1-216-845-11	s	METAL, CHIP 100K 5% 1/16W
R818	1-216-843-11	s	METAL, CHIP 68K 5% 1/16W
R819	1-218-744-11	s	METAL, CHIP 150K 0.50% 1/16W
R820	1-216-838-11	s	METAL, CHIP 27K 5% 1/16W

(SST-2 BOARD)

Ref. No. or Q'ty	Part No.	SP	Description
R821	1-216-850-11	s	METAL, CHIP 270K 5% 1/16W
R822	1-216-838-11	s	METAL, CHIP 27K 5% 1/16W
R823	1-216-809-11	s	METAL, CHIP 100 5% 1/16W
R824	1-216-837-11	s	METAL, CHIP 22K 5% 1/16W
R825	1-216-829-11	s	METAL, CHIP 4.7K 5% 1/16W
R826	1-216-833-11	s	METAL, CHIP 10K 5% 1/16W
R827	1-216-841-11	s	METAL, CHIP 47K 5% 1/16W
R828	1-216-841-11	s	METAL, CHIP 47K 5% 1/16W
R829	1-216-843-11	s	METAL, CHIP 68K 5% 1/16W
R830	1-216-847-11	s	METAL, CHIP 150K 5% 1/16W
R831	1-216-821-11	s	METAL, CHIP 1K 5% 1/16W
R833	1-216-851-11	s	METAL, CHIP 330K 5% 1/16W
R834	1-218-349-11	s	METAL, CHIP 240K 5% 1/16W
R835	1-216-837-11	s	METAL, CHIP 22K 5% 1/16W
R837	1-216-833-11	s	METAL, CHIP 10K 5% 1/16W
R838	1-216-849-11	s	METAL, CHIP 220K 5% 1/16W
R839	1-216-818-11	s	METAL, CHIP 560 5% 1/16W
R840	1-216-850-11	s	METAL, CHIP 270K 5% 1/16W
R841	1-216-833-11	s	METAL, CHIP 10K 5% 1/16W
R842	1-216-833-11	s	METAL, CHIP 10K 5% 1/16W
R843	1-216-833-11	s	METAL, CHIP 10K 5% 1/16W
R844	1-216-850-11	s	METAL, CHIP 270K 5% 1/16W
R845	1-216-833-11	s	METAL, CHIP 10K 5% 1/16W
R846	1-216-850-11	s	METAL, CHIP 270K 5% 1/16W
R847	1-216-833-11	s	METAL, CHIP 10K 5% 1/16W
R848	1-216-850-11	s	METAL, CHIP 270K 5% 1/16W
R849	1-216-833-11	s	METAL, CHIP 10K 5% 1/16W
R850	1-218-296-11	s	METAL, CHIP 75K 5% 1/16W
R853	1-216-817-11	s	METAL, CHIP 470 5% 1/16W
R854	1-216-817-11	s	METAL, CHIP 470 5% 1/16W
R855	1-216-817-11	s	METAL, CHIP 470 5% 1/16W
R864	1-216-813-11	s	METAL, CHIP 220 5% 1/16W
R901	1-216-814-11	s	METAL, CHIP 270 5% 1/16W
R902	1-216-814-11	s	METAL, CHIP 270 5% 1/16W
R903	1-216-814-11	s	METAL, CHIP 270 5% 1/16W
R904	1-216-821-11	s	METAL, CHIP 1K 5% 1/16W
R905	1-216-825-11	s	METAL, CHIP 2.2K 5% 1/16W
R906	1-216-825-11	s	METAL, CHIP 2.2K 5% 1/16W
R907	1-216-831-11	s	METAL, CHIP 6.8K 5% 1/16W
R908	1-216-810-11	s	METAL, CHIP 120 5% 1/16W
R909	1-216-810-11	s	METAL, CHIP 120 5% 1/16W
R910	1-216-833-11	s	METAL, CHIP 10K 5% 1/16W
R911	1-216-853-11	s	METAL, CHIP 470K 5% 1/16W
R912	1-216-831-11	s	METAL, CHIP 6.8K 5% 1/16W
R913	1-216-826-11	s	METAL, CHIP 2.7K 5% 1/16W
R916	1-216-833-11	s	METAL, CHIP 10K 5% 1/16W
R917	1-216-833-11	s	METAL, CHIP 10K 5% 1/16W
R918	1-216-833-11	s	METAL, CHIP 10K 5% 1/16W
R919	1-216-833-11	s	METAL, CHIP 10K 5% 1/16W
R920	1-216-835-11	s	METAL, CHIP 15K 5% 1/16W
R921	1-216-838-11	s	METAL, CHIP 27K 5% 1/16W
R922	1-216-839-11	s	METAL, CHIP 33K 5% 1/16W
R923	1-216-840-11	s	METAL, CHIP 39K 5% 1/16W
R924	1-216-841-11	s	METAL, CHIP 47K 5% 1/16W
R925	1-216-841-11	s	METAL, CHIP 47K 5% 1/16W
R926	1-216-851-11	s	METAL, CHIP 330K 5% 1/16W
R927	1-216-855-11	s	METAL, CHIP 680K 5% 1/16W
R928	1-216-833-11	s	METAL, CHIP 10K 5% 1/16W
R929	1-216-823-11	s	METAL, CHIP 1.5K 5% 1/16W

(SST-2 BOARD)

Ref. No. or Q'ty	Part No.	SP	Description
R930	1-216-829-11	s	METAL, CHIP 4.7K 5% 1/16W
R932	1-216-853-11	s	METAL, CHIP 470K 5% 1/16W
R933	1-216-833-11	s	METAL, CHIP 10K 5% 1/16W
R934	1-216-821-11	s	METAL, CHIP 1K 5% 1/16W
R935	1-216-821-11	s	METAL, CHIP 1K 5% 1/16W
R951	1-216-831-11	s	METAL, CHIP 6.8K 5% 1/16W
R952	1-216-828-11	s	METAL, CHIP 3.9K 5% 1/16W
R953	1-214-972-00	s	METAL, CHIP 0.22 1% 1/4W
R954	1-216-821-11	s	METAL, CHIP 1K 5% 1/16W
R955	1-216-836-11	s	METAL, CHIP 18K 5% 1/16W
R957	1-216-817-11	s	METAL, CHIP 470 5% 1/16W
R958	1-216-817-11	s	METAL, CHIP 470 5% 1/16W
R959	1-216-817-11	s	METAL, CHIP 470 5% 1/16W
R960	1-216-837-11	s	METAL, CHIP 22K 5% 1/16W
R961	1-216-837-11	s	METAL, CHIP 22K 5% 1/16W
R962	1-216-837-11	s	METAL, CHIP 22K 5% 1/16W
R963	1-216-837-11	s	METAL, CHIP 22K 5% 1/16W
R964	⚠1-207-620-00	s	WIREWOUND 1 10% 3W
R965	1-216-833-11	s	METAL, CHIP 10K 5% 1/16W
R966	1-216-833-11	s	METAL, CHIP 10K 5% 1/16W
R967	1-216-844-11	s	METAL, CHIP 82K 5% 1/16W
R968	1-216-836-11	s	METAL, CHIP 18K 5% 1/16W
R969	1-216-836-11	s	METAL, CHIP 18K 5% 1/16W
R970	1-216-825-11	s	METAL, CHIP 2.2K 5% 1/16W
R971	1-216-814-11	s	METAL, CHIP 270 5% 1/16W
R1001	1-216-833-11	s	METAL, CHIP 10K 5% 1/16W
R1002	1-216-821-11	s	METAL, CHIP 1K 5% 1/16W
R1003	1-216-821-11	s	METAL, CHIP 1K 5% 1/16W
R1004	1-216-833-11	s	METAL, CHIP 10K 5% 1/16W
R1005	1-216-833-11	s	METAL, CHIP 10K 5% 1/16W
R1006	1-216-833-11	s	METAL, CHIP 10K 5% 1/16W
R1008	1-216-841-11	s	METAL, CHIP 47K 5% 1/16W
R1009	1-216-833-11	s	METAL, CHIP 10K 5% 1/16W
R1010	1-216-841-11	s	METAL, CHIP 47K 5% 1/16W
R1011	1-216-833-11	s	METAL, CHIP 10K 5% 1/16W
R1012	1-216-833-11	s	METAL, CHIP 10K 5% 1/16W
R1013	1-216-833-11	s	METAL, CHIP 10K 5% 1/16W
R1014	1-216-833-11	s	METAL, CHIP 10K 5% 1/16W
R1015	1-216-841-11	s	METAL, CHIP 47K 5% 1/16W
R1101	1-216-821-11	s	METAL, CHIP 1K 5% 1/16W
R1102	1-216-833-11	s	METAL, CHIP 10K 5% 1/16W
R1501	1-216-821-11	s	METAL, CHIP 1K 5% 1/16W
R1901	1-216-841-11	s	METAL, CHIP 47K 5% 1/16W
R1902	1-216-849-11	s	METAL, CHIP 220K 5% 1/16W
R1903	1-249-435-11	s	CARBON 33K 5% 1/4W
RV2	1-238-804-11	s	RES, ADJ METAL 50K
RV401	1-238-802-11	s	RES, ADJ METAL 10K
RV402	1-238-802-11	s	RES, ADJ METAL 10K
RV403	1-238-802-11	s	RES, ADJ METAL 10K
RV404	1-238-802-11	s	RES, ADJ METAL 10K
RV405	1-238-802-11	s	RES, ADJ METAL 10K
RV410	1-238-802-11	s	RES, ADJ METAL 10K
RV601	1-238-802-11	s	RES, ADJ METAL 10K
RV602	1-238-802-11	s	RES, ADJ METAL 10K
RV603	1-238-804-11	s	RES, ADJ METAL 50K
RV701	1-238-802-11	s	RES, ADJ METAL 10K
RV702	1-238-801-11	s	RES, ADJ METAL 5K
RV703	1-238-801-11	s	RES, ADJ METAL 5K
RV802	1-238-802-11	s	RES, ADJ METAL 10K

(SST-2 BOARD)

Ref. No. or Q'ty	Part No.	SP	Description
RV803	1-238-805-11	s	RES, ADJ METAL 100K
RV804	1-238-797-11	s	RES, ADJ METAL 200
RV805	1-238-802-11	s	RES, ADJ METAL 10K
RV901	1-238-807-11	s	RES, ADJ METAL 500K
RV1001	1-238-804-11	s	RES, ADJ METAL 50K
S1	1-571-787-11	s	SWITCH, PUSH
S2	1-553-977-00	s	SWITCH, SLIDE
S401	1-570-598-11	s	SWITCH, DIP 4-CKT
X1	1-567-870-11	s	RESONATOR, CERAMIC 614KHz
X2	1-567-797-11	s	RESONATOR, CERAMIC 12.0MHz
X3	1-567-870-11	s	RESONATOR, CERAMIC 614KHz
X201	1-567-192-11	s	RESONATOR, CERAMIC 4.00MHz
X401	1-567-865-11	s	CRYSTAL, 12.00MHz
X501	1-577-116-21	s	CRYSTAL 16MHz
X502	1-567-160-21	s	RESONATOR, CERAMIC 4.19MHz
X701	1-567-735-11	s	CRYSTAL 5.94755MHz

SW-466 BOARD

Ref. No. or Q'ty	Part No.	SP	Description
1pc	1-642-870-11	o	PRINTED CIRCUITBOARD, SW-466
CN244	1-506-468-11	s	CONNECTOR 3P, MALE
S1	1-516-961-00	s	SWITCH, LEVER SLIDE

SW-467 BOARD

Ref. No. or Q'ty	Part No.	SP	Description
1pc	1-642-952-13	o	PRINTED CIRCUIT BOARD, SW-467
1pc	3-697-607-01	o	HOLDER (SU), LED
CN246	1-506-478-11	s	CONNECTOR, 13P, MALE
CN247	1-506-489-11	s	CONNECTOR, 10P, MALE
CN248	1-506-492-11	o	CONNECTOR, 13P, MALE
CN249	1-506-469-11	s	CONNECTOR, 4P, MALE
D30	8-719-812-43	s	LED TLG124A, GRN
R1	1-216-825-11	s	METAL, CHIP 2.2K 5% 1/16W
R2	1-216-825-11	s	METAL, CHIP 2.2K 5% 1/16W
R3	1-216-825-11	s	METAL, CHIP 2.2K 5% 1/16W
R4	1-216-825-11	s	METAL, CHIP 2.2K 5% 1/16W
R5	1-216-825-11	s	METAL, CHIP 2.2K 5% 1/16W
R6	1-216-825-11	s	METAL, CHIP 2.2K 5% 1/16W
R7	1-216-814-11	s	METAL, CHIP 270 5% 1/16W
R8	1-216-814-11	s	METAL, CHIP 270 5% 1/16W
R30	1-216-815-11	s	METAL, CHIP 330 5% 1/16W
RV1	1-241-918-11	s	RES, VAR, CARBON 5K
RV2	1-241-918-11	s	RES, VAR, CARBON 5K
RV3	1-241-918-11	s	RES, VAR, CARBON 5K
RV4	1-241-918-11	s	RES, VAR, CARBON 5K
RV5	1-241-856-11	s	RES, VAR, CARBON 5K
RV6	1-241-856-11	s	RES, VAR, CARBON 5K
S1	1-570-145-11	s	SWITCH, SLIDE
S2	1-570-145-11	s	SWITCH, SLIDE
S3	1-570-145-11	s	SWITCH, SLIDE
S4	1-572-374-11	s	SWITCH, SLIDE
S5	1-572-374-11	s	SWITCH, SLIDE
S6	1-572-374-11	s	SWITCH, SLIDE
S7	1-570-145-11	s	SWITCH, SLIDE
S8	1-692-077-11	s	SWITCH, SLIDE
S9	1-572-374-11	s	SWITCH, SLIDE
S10	1-570-145-11	s	SWITCH, SLIDE
S11	1-572-374-11	s	SWITCH, SLIDE
S12	1-570-145-11	s	SWITCH, SLIDE
S13	1-570-145-11	s	SWITCH, SLIDE

SW-540 BOARD

Ref. No. or Q'ty	Part No.	SP	Description
1pc	1-642-871-12	o	PRINTED CIRCUIT BOARD, SW-540
CN243	1-506-468-11	s	CONNECTOR 3P, MALE
S1	1-516-961-00	s	SWITCH, LEVER SLIDE

SW-543 BOARD

Ref. No. or Q'ty	Part No.	SP	Description
1pc	1-642-872-11	o	PRINTED CIRCUIT BOARD, SW-543
CN810	1-506-468-11	s	CONNECTOR 3P, MALE
S1007	1-516-961-00	s	SWITCH, LEVER SLIDE

TBC-21 BOARD

Ref. No. or Q'ty	Part No.	SP	Description
1pc	A-8271-229-A	o	MOUNTED CIRCUIT BOARD, TBC-21
1pc	3-947-151-01	o	PLATE, SHIELD, CARD
1pc	7-621-759-45	s	SCREW +PSW 2.6X6
2pcs	2-251-622-11	s	LEVER, PC BOARD
C1	1-126-176-11	s	ELECT 220uF 20% 10V
C2	1-126-176-11	s	ELECT 220uF 20% 10V
C3	1-126-176-11	s	ELECT 220uF 20% 10V
C4	1-126-176-11	s	ELECT 220uF 20% 10V
C5	1-124-477-11	s	ELECT 47uF 20% 25V
C6	1-164-227-11	s	CERAMIC, CHIP 0.022uF 10% 25V
C7	1-162-919-11	s	CERAMIC, CHIP 22PF 5% 50V
C8	1-163-112-00	s	CERAMIC, CHIP 62PF 5% 50V
C9	1-163-112-00	s	CERAMIC, CHIP 62PF 5% 50V
C10	1-162-927-11	s	CERAMIC, CHIP 100PF 5% 50V
C11	1-135-070-00	s	TANTALUM, CHIP 0.1uF 10% 35V
C12	1-124-477-11	s	ELECT 47uF 20% 25V
C13	1-164-227-11	s	CERAMIC, CHIP 0.022uF 10% 25V
C14	1-124-477-11	s	ELECT 47uF 20% 25V
C15	1-164-227-11	s	CERAMIC, CHIP 0.022uF 10% 25V
C16	1-124-477-11	s	ELECT 47uF 20% 25V
C17	1-164-227-11	s	CERAMIC, CHIP 0.022uF 10% 25V
C18	1-135-145-11	s	TANTALUM, CHIP 0.47uF 10% 35V
C19	1-135-159-21	s	TANTALUM, CHIP 10uF 10% 20V
C20	1-124-907-11	s	ELECT 10uF 20% 50V
C21	1-164-227-11	s	CERAMIC, CHIP 0.022uF 10% 25V
C22	1-163-038-00	s	CERAMIC, CHIP 0.1uF 25V
C24	1-164-227-11	s	CERAMIC, CHIP 0.022uF 10% 25V
C25	1-124-477-11	s	ELECT 47uF 20% 25V
C27	1-124-477-11	s	ELECT 47uF 20% 25V
C28	1-164-227-11	s	CERAMIC, CHIP 0.022uF 10% 25V
C29	1-124-477-11	s	ELECT 47uF 20% 25V
C30	1-162-925-11	s	CERAMIC, CHIP 68PF 5% 50V
C31	1-164-227-11	s	CERAMIC, CHIP 0.022uF 10% 25V
C32	1-163-038-00	s	CERAMIC, CHIP 0.1uF 25V
C33	1-164-227-11	s	CERAMIC, CHIP 0.022uF 10% 25V
C34	1-126-103-11	s	ELECT 470uF 20% 16V
C35	1-164-227-11	s	CERAMIC, CHIP 0.022uF 10% 25V
C36	1-124-477-11	s	ELECT 47uF 20% 25V
C37	1-164-227-11	s	CERAMIC, CHIP 0.022uF 10% 25V
C38	1-128-057-11	s	ELECT 330uF 20% 6.3V
C39	1-164-227-11	s	CERAMIC, CHIP 0.022uF 10% 25V
C41	1-164-227-11	s	CERAMIC, CHIP 0.022uF 10% 25V
C42	1-164-227-11	s	CERAMIC, CHIP 0.022uF 10% 25V
C43	1-164-227-11	s	CERAMIC, CHIP 0.022uF 10% 25V
C44	1-164-227-11	s	CERAMIC, CHIP 0.022uF 10% 25V
C45	1-164-227-11	s	CERAMIC, CHIP 0.022uF 10% 25V
C50	1-135-091-00	s	TANTALUN, CHIP 1uF 10% 16V
C51	1-162-970-11	s	CERAMIC, CHIP 0.01uF 10% 25V
C52	1-124-907-11	s	ELECT 10uF 20% 50V
C55	1-124-477-11	s	ELECT 47uF 20% 25V
C56	1-164-227-11	s	CERAMIC, CHIP 0.022uF 10% 25V
C57	1-164-227-11	s	CERAMIC, CHIP 0.022uF 10% 25V
C61	1-164-227-11	s	CERAMIC, CHIP 0.022uF 10% 25V
C63	1-124-477-11	s	ELECT 47uF 20% 25V
C65	1-162-919-11	s	CERAMIC, CHIP 22PF 5% 50V
C66	1-164-227-11	s	CERAMIC, CHIP 0.022uF 10% 25V
C67	1-163-038-00	s	CERAMIC, CHIP 0.1uF 25V
C68	1-164-227-11	s	CERAMIC, CHIP 0.022uF 10% 25V
C69	1-164-227-11	s	CERAMIC, CHIP 0.022uF 10% 25V

(TBC-21 BOARD)

Ref. No. or Q'ty	Part No.	SP	Description
C70	1-128-057-11	s	ELECT 330uF 20% 6.3V
C71	1-164-227-11	s	CERAMIC, CHIP 0.022uF 10% 25V
C72	1-162-921-11	s	CERAMIC, CHIP 33PF 5% 50V
C73	1-124-903-11	s	ELECT 1uF 20% 50V
C74	1-124-907-11	s	ELECT 10uF 20% 50V
C75	1-164-227-11	s	CERAMIC, CHIP 0.022uF 10% 25V
C76	1-162-919-11	s	CERAMIC, CHIP 22PF 5% 50V
C77	1-162-919-11	s	CERAMIC, CHIP 22PF 5% 50V
C78	1-162-915-11	s	CERAMIC, CHIP 10PF 50V
C79	1-124-477-11	s	ELECT 47uF 20% 25V
C80	1-162-927-11	s	CERAMIC, CHIP 100PF 5% 50V
C81	1-163-038-00	s	CERAMIC, CHIP 0.1uF 25V
C82	1-164-227-11	s	CERAMIC, CHIP 0.022uF 10% 25V
C83	1-164-227-11	s	CERAMIC, CHIP 0.022uF 10% 25V
C84	1-162-915-11	s	CERAMIC, CHIP 10PF 50V
C85	1-162-919-11	s	CERAMIC, CHIP 22PF 5% 50V
C86	1-162-919-11	s	CERAMIC, CHIP 22PF 5% 50V
C87	1-163-275-11	s	CERAMIC, CHIP 0.001uF 5% 50V
C88	1-164-227-11	s	CERAMIC, CHIP 0.022uF 10% 25V
C89	1-124-477-11	s	ELECT 47uF 20% 25V
C90	1-164-227-11	s	CERAMIC, CHIP 0.022uF 10% 25V
C91	1-124-477-11	s	ELECT 47uF 20% 25V
C92	1-124-477-11	s	ELECT 47uF 20% 25V
C93	1-164-227-11	s	CERAMIC, CHIP 0.022uF 10% 25V
C94	1-124-477-11	s	ELECT 47uF 20% 25V
C95	1-126-103-11	s	ELECT 470uF 20% 16V
C96	1-164-227-11	s	CERAMIC, CHIP 0.022uF 10% 25V
C97	1-164-227-11	s	CERAMIC, CHIP 0.022uF 10% 25V
C98	1-163-038-00	s	CERAMIC, CHIP 0.1uF 25V
C100	1-162-927-11	s	CERAMIC, CHIP 100PF 5% 50V
C102	1-164-227-11	s	CERAMIC, CHIP 0.022uF 10% 25V
C103	1-128-057-11	s	ELECT 330uF 20% 6.3V
C104	1-164-227-11	s	CERAMIC, CHIP 0.022uF 10% 25V
C105	1-164-005-11	s	CERAMIC, CHIP 0.47uF 25V
C107	1-162-919-11	s	CERAMIC, CHIP 22PF 5% 50V
C108	1-162-927-11	s	CERAMIC, CHIP 100PF 5% 50V
C402	1-124-477-11	s	ELECT 47uF 20% 25V
C403	1-124-477-11	s	ELECT 47uF 20% 25V
C404	1-124-477-11	s	ELECT 47uF 20% 25V
C405	1-162-970-11	s	CERAMIC, CHIP 0.01uF 10% 25V
C407	1-164-227-11	s	CERAMIC, CHIP 0.022uF 10% 25V
C409	1-164-227-11	s	CERAMIC, CHIP 0.022uF 10% 25V
C410	1-164-227-11	s	CERAMIC, CHIP 0.022uF 10% 25V
C416	1-124-477-11	s	ELECT 47uF 20% 25V
C417	1-124-126-00	s	ELECT 47uF 20% 25V
C418	1-164-227-11	s	CERAMIC, CHIP 0.022uF 10% 25V
C419	1-162-928-11	s	CERAMIC, CHIP 120PF 5% 50V
C420	1-162-970-11	s	CERAMIC, CHIP 0.01uF 10% 25V
C421	1-162-970-11	s	CERAMIC, CHIP 0.01uF 10% 25V
C422	1-163-127-00	s	CERAMIC, CHIP 270PF 5% 50V
C423	1-124-477-11	s	ELECT 47uF 20% 25V
C424	1-163-139-00	s	CERAMIC, CHIP 820PF 5% 50V
C425	1-124-477-11	s	ELECT 47uF 20% 25V
C426	1-124-477-11	s	ELECT 47uF 20% 25V
C427	1-124-477-11	s	ELECT 47uF 20% 25V
C428	1-124-477-11	s	ELECT 47uF 20% 25V
C429	1-164-227-11	s	CERAMIC, CHIP 0.022uF 10% 25V
C430	1-162-970-11	s	CERAMIC, CHIP 0.01uF 10% 25V
C431	1-135-092-21	s	TANTALUM, CHIP 3.3uF 10% 16V

(TBC-21 BOARD)

Ref. No. or Q'ty	Part No.	SP	Description
C432	1-164-245-11	s	CERAMIC, CHIP 0.015uF 10% 25V
C436	1-162-970-11	s	CERAMIC, CHIP 0.01uF 10% 25V
C440	1-162-919-11	s	CERAMIC, CHIP 22PF 5% 50V
C441	1-162-919-11	s	CERAMIC, CHIP 22PF 5% 50V
C442	1-124-443-00	s	ELECT 100uF 20% 10V
C443	1-124-443-00	s	ELECT 100uF 20% 10V
C444	1-163-038-00	s	CERAMIC, CHIP 0.1uF 25V
C445	1-163-038-00	s	CERAMIC, CHIP 0.1uF 25V
C446	1-162-970-11	s	CERAMIC, CHIP 0.01uF 10% 25V
C447	1-162-970-11	s	CERAMIC, CHIP 0.01uF 10% 25V
C448	1-126-233-11	s	ELECT 22uF 20% 50V
C449	1-124-903-11	s	ELECT 1uF 20% 50V
C450	1-163-275-11	s	CERAMIC, CHIP 0.001uF 5% 50V
C451	1-124-477-11	s	ELECT 47uF 20% 25V
C452	1-124-907-11	s	ELECT 10uF 20% 50V
C453	1-163-038-00	s	CERAMIC, CHIP 0.1uF 25V
C454	1-163-038-00	s	CERAMIC, CHIP 0.1uF 25V
C455	1-163-038-00	s	CERAMIC, CHIP 0.1uF 25V
C456	1-163-038-00	s	CERAMIC, CHIP 0.1uF 25V
C457	1-164-227-11	s	CERAMIC, CHIP 0.022uF 10% 25V
C458	1-162-967-11	s	CERAMIC, CHIP 0.0033uF 10% 50V
C459	1-163-038-00	s	CERAMIC, CHIP 0.1uF 25V
C460	1-163-038-00	s	CERAMIC, CHIP 0.1uF 25V
C461	1-124-443-00	s	ELECT 100uF 20% 10V
C462	1-123-382-00	s	ELECT 3.3uF 20% 100V
C464	1-163-133-00	s	CERAMIC, CHIP 470PF 5% 50V
C465	1-164-237-11	s	CERAMIC, CHIP 16PF 5% 50V
C466	1-162-970-11	s	CERAMIC, CHIP 0.01uF 10% 25V
C467	1-162-638-11	s	CERAMIC, CHIP 1uF 16V
C468	1-162-638-11	s	CERAMIC, CHIP 1uF 16V
C470	1-162-927-11	s	CERAMIC, CHIP 100PF 5% 50V
C471	1-124-903-11	s	ELECT 1uF 20% 50V
C472	1-163-275-11	s	CERAMIC, CHIP 0.001uF 5% 50V
C473	1-163-275-11	s	CERAMIC, CHIP 0.001uF 5% 50V
C474	1-163-038-00	s	CERAMIC, CHIP 0.1uF 25V
C475	1-135-145-11	s	TANTALUM, CHIP 0.47uF 10% 35V
C476	1-163-127-00	s	CERAMIC, CHIP 270PF 5% 50V
C477	1-162-966-11	s	CERAMIC, CHIP 0.0022uF 10% 50V
C478	1-163-038-00	s	CERAMIC, CHIP 0.1uF 25V
C479	1-163-038-00	s	CERAMIC, CHIP 0.1uF 25V
C480	1-126-233-11	s	ELECT 22uF 20% 50V
C481	1-163-038-00	s	CERAMIC, CHIP 0.1uF 25V
C482	1-126-233-11	s	ELECT 22uF 20% 50V
C483	1-163-038-00	s	CERAMIC, CHIP 0.1uF 25V
C484	1-126-233-11	s	ELECT 22uF 20% 50V
C486	1-126-233-11	s	ELECT 22uF 20% 50V
C487	1-163-038-00	s	CERAMIC, CHIP 0.1uF 25V
C488	1-163-038-00	s	CERAMIC, CHIP 0.1uF 25V
C489	1-163-038-00	s	CERAMIC, CHIP 0.1uF 25V
C490	1-163-038-00	s	CERAMIC, CHIP 0.1uF 25V
C491	1-126-233-11	s	ELECT 22uF 20% 50V
C492	1-163-038-00	s	CERAMIC, CHIP 0.1uF 25V
C493	1-163-038-00	s	CERAMIC, CHIP 0.1uF 25V
C494	1-124-443-00	s	ELECT 100uF 20% 10V
C495	1-124-443-00	s	ELECT 100uF 20% 10V
C496	1-164-227-11	s	CERAMIC, CHIP 0.022uF 10% 25V
C497	1-164-227-11	s	CERAMIC, CHIP 0.022uF 10% 25V
C498	1-164-227-11	s	CERAMIC, CHIP 0.022uF 10% 25V
C499	1-164-227-11	s	CERAMIC, CHIP 0.022uF 10% 25V

(TBC-21 BOARD)

Ref. No. or Q'ty	Part No.	SP	Description
C500	1-164-227-11	s	CERAMIC, CHIP 0.022uF 10% 25V
C501	1-164-227-11	s	CERAMIC, CHIP 0.022uF 10% 25V
C502	1-124-443-00	s	ELECT 100uF 20% 10V
C503	1-162-970-11	s	CERAMIC, CHIP 0.01uF 10% 25V
C504	1-163-038-00	s	CERAMIC, CHIP 0.1uF 25V
C505	1-163-038-00	s	CERAMIC, CHIP 0.1uF 25V
C506	1-124-443-00	s	ELECT 100uF 20% 10V
C507	1-124-443-00	s	ELECT 100uF 20% 10V
C508	1-164-227-11	s	CERAMIC, CHIP 0.022uF 10% 25V
C509	1-164-227-11	s	CERAMIC, CHIP 0.022uF 10% 25V
C510	1-164-227-11	s	CERAMIC, CHIP 0.022uF 10% 25V
C511	1-164-227-11	s	CERAMIC, CHIP 0.022uF 10% 25V
C512	1-162-970-11	s	CERAMIC, CHIP 0.01uF 10% 25V
C513	1-162-970-11	s	CERAMIC, CHIP 0.01uF 10% 25V
C514	1-124-443-00	s	ELECT 100uF 20% 10V
C515	1-164-227-11	s	CERAMIC, CHIP 0.022uF 10% 25V
C516	1-164-227-11	s	CERAMIC, CHIP 0.022uF 10% 25V
C517	1-164-227-11	s	CERAMIC, CHIP 0.022uF 10% 25V
C519	1-124-126-00	s	ELECT 47uF 20% 25V
C520	1-164-227-11	s	CERAMIC, CHIP 0.022uF 10% 25V
C521	1-164-227-11	s	CERAMIC, CHIP 0.022uF 10% 25V
C522	1-124-126-00	s	ELECT 47uF 20% 25V
C523	1-164-227-11	s	CERAMIC, CHIP 0.022uF 10% 25V
C524	1-124-126-00	s	ELECT 47uF 20% 25V
C525	1-164-227-11	s	CERAMIC, CHIP 0.022uF 10% 25V
C526	1-124-126-00	s	ELECT 47uF 20% 25V
C527	1-164-227-11	s	CERAMIC, CHIP 0.022uF 10% 25V
C528	1-124-477-11	s	ELECT 47uF 20% 25V
C529	1-162-919-11	s	CERAMIC, CHIP 22PF 5% 50V
C530	1-162-919-11	s	CERAMIC, CHIP 22PF 5% 50V
C532	1-162-970-11	s	CERAMIC, CHIP 0.01uF 10% 25V
C533	1-162-919-11	s	CERAMIC, CHIP 22PF 5% 50V
C534	1-162-919-11	s	CERAMIC, CHIP 22PF 5% 50V
C535	1-162-970-11	s	CERAMIC, CHIP 0.01uF 10% 25V
C538	1-164-227-11	s	CERAMIC, CHIP 0.022uF 10% 25V
C539	1-162-970-11	s	CERAMIC, CHIP 0.01uF 10% 25V
C540	1-162-970-11	s	CERAMIC, CHIP 0.01uF 10% 25V
C541	1-162-915-11	s	CERAMIC, CHIP 10PF 50V
C542	1-162-927-11	s	CERAMIC, CHIP 100PF 5% 50V
C543	1-162-970-11	s	CERAMIC, CHIP 0.01uF 10% 25V
C701	1-163-275-11	s	CERAMIC, CHIP 0.001uF 5% 50V
C702	1-162-966-11	s	CERAMIC, CHIP 0.0022uF 10% 50V
C703	1-164-227-11	s	CERAMIC, CHIP 0.022uF 10% 25V
C704	1-124-477-11	s	ELECT 47uF 20% 25V
C705	1-162-970-11	s	CERAMIC, CHIP 0.01uF 10% 25V
C706	1-162-970-11	s	CERAMIC, CHIP 0.01uF 10% 25V
C707	1-124-903-11	s	ELECT 1uF 20% 50V
C708	1-163-275-11	s	CERAMIC, CHIP 0.001uF 5% 50V
C709	1-124-477-11	s	ELECT 47uF 20% 25V
C710	1-135-148-21	s	TANTALUM 1.5uF 10% 16V
C711	1-163-038-00	s	CERAMIC, CHIP 0.1uF 25V
C712	1-124-907-11	s	ELECT 10uF 20% 50V
C713	1-163-038-00	s	CERAMIC, CHIP 0.1uF 25V
C714	1-124-477-11	s	ELECT 47uF 20% 25V
C715	1-164-227-11	s	CERAMIC, CHIP 0.022uF 10% 25V
C716	1-124-477-11	s	ELECT 47uF 20% 25V
C717	1-162-915-11	s	CERAMIC, CHIP 10PF 50V
C718	1-162-919-11	s	CERAMIC, CHIP 22PF 5% 50V
C719	1-162-919-11	s	CERAMIC, CHIP 22PF 5% 50V

(TBC-21 BOARD)

Ref. No. or Q'ty	Part No.	SP	Description
C720	1-163-275-11	s	CERAMIC, CHIP 0.001uF 5% 50V
C721	1-164-227-11	s	CERAMIC, CHIP 0.022uF 10% 25V
C722	1-124-477-11	s	ELECT 47uF 20% 25V
C723	1-164-227-11	s	CERAMIC, CHIP 0.022uF 10% 25V
C724	1-124-477-11	s	ELECT 47uF 20% 25V
C725	1-162-726-11	s	CERAMIC 470PF 1% 50V
C726	1-162-777-11	s	CERAMIC 0.01uF 5% 50V
CN611	1-573-782-21	o	CONNECTOR, PHEC 60P, MALE
CN612	1-573-782-21	o	CONNECTOR, PHEC 60P, MALE
CV401	1-141-322-11	s	CAP, VAR, TRIMMER 20PF
D2	8-719-800-76	s	DIODE 1SS226
D3	8-719-018-78	s	DIODE 02CZ3.9
D5	8-719-800-76	s	DIODE 1SS226
D6	8-719-915-43	s	DIODE VARICAP FC54M
D401	8-719-940-45	s	DIODE DWA010
D402	8-713-300-88	s	DIODE 1T33C-01
D403	8-713-300-88	s	DIODE 1T33C-01
D407	8-719-941-86	s	DIODE DAN202UT106
D408	8-719-941-86	s	DIODE DAN202U
D409	8-719-941-86	s	DIODE DAN202U
D701	8-719-915-43	s	DIODE, VARICAP FC54M
IC1	8-741-104-00	s	IC BX1040
IC2	8-759-101-12	s	IC UPC311G2
IC3	8-752-335-47	s	IC CXD1216M
IC4	8-752-332-67	s	IC CXD1217M
IC5	8-759-239-55	s	IC TC74HC123AF
IC6	8-759-908-17	s	IC TL082CPS
IC7	8-759-908-17	s	IC TL082CPS
IC8	8-759-908-17	s	IC TL082CPS
IC11	8-759-009-07	s	IC MC14053BF
IC12	8-759-982-05	s	IC RC7805FA
IC14	8-759-980-27	s	IC SN74ALS163BNS
IC15	8-759-239-55	s	IC TC74HC123AF
IC16	8-759-927-46	s	IC SN74HC00NS
IC17	8-759-925-74	s	IC TC74HC04NS
IC18	8-759-926-24	s	IC SN74HC164NS
IC19	8-759-926-24	s	IC SN74HC164NS
IC20	8-759-926-24	s	IC SN74HC164NS
IC21	8-759-908-17	s	IC TL082CPS
IC22	8-759-239-55	s	IC TC74HC123AF
IC23	8-752-306-51	s	IC CX23065A
IC28	8-759-926-24	s	IC SN74HC164NS
IC29	8-759-926-24	s	IC SN74HC164NS
IC30	8-759-926-24	s	IC SN74HC164NS
IC31	8-759-239-55	s	IC TC74HC123AF
IC401	8-759-982-05	s	IC RC7805FA
IC402	8-759-239-55	s	IC TC74HC123AF
IC403	8-752-334-55	s	IC CXD1175M
IC404	8-752-334-55	s	IC CXD1175M
IC405	8-759-925-76	s	IC SN74HC08NS
IC406	8-759-987-17	s	IC CXD1226Q
IC407	8-759-987-20	s	IC CXD1229Q
IC408	8-759-982-05	s	IC RC7805FA
IC409	8-759-925-85	s	IC SN74HC32NS
IC410	8-759-926-29	s	IC SN74HC175NS
IC411	8-759-927-46	s	IC SN74HC00NS

(TBC-21 BOARD)

Ref. No. or Q'ty	Part No.	SP	Description
IC412	8-759-009-51	s	IC MC14538BF
IC413	8-759-925-90	s	IC SN74HC74NS
IC414	8-759-710-86	s	IC NJM2233BM-T1
IC415	8-752-340-75	s	IC CXK1206AM
IC416	8-752-340-75	s	IC CXK1206AM
IC417	8-752-340-75	s	IC CXK1206AM
IC418	8-759-926-23	s	IC SN74HC163NS
IC420	8-759-987-19	s	IC CXD1228Q
IC421	8-759-987-18	s	IC CXD1227Q
IC422	8-752-032-96	s	IC CXA1106M
IC423	8-752-032-96	s	IC CXA1106M
IC424	8-759-700-43	s	IC NJM4558M
IC425	8-759-700-43	s	IC NJM4558M
IC701	8-759-009-51	s	IC MC14538BF
IC702	8-759-925-90	s	IC SN74HC74NS
IC703	8-759-926-20	s	IC SN74HC160NS
IC704	8-759-925-99	s	IC SN74HC109NS
IC705	8-759-987-20	s	IC CXD1229Q
IC706	8-759-908-17	s	IC TL082CPS
IC707	8-759-925-90	s	IC SN74HC74NS
IC708	8-759-239-55	s	IC TC74HC123AF
IC709	8-759-927-46	s	IC SN74HC00NS
L1	1-408-785-21	s	INDUCTOR, CHIP 47UH
L2	1-410-386-11	s	INDUCTOR, CHIP 27uH
L3	1-410-386-11	s	INDUCTOR, CHIP 27uH
L4	1-408-785-21	s	INDUCTOR, CHIP 47UH
L5	1-408-789-21	s	INDUCTOR, CHIP 100UH
L6	1-408-785-21	s	INDUCTOR, CHIP 47UH
L7	1-408-785-21	s	INDUCTOR, CHIP 47UH
L9	1-408-785-21	s	INDUCTOR, CHIP 47UH
L10	1-408-785-21	s	INDUCTOR, CHIP 47UH
L11	1-408-785-21	s	INDUCTOR, CHIP 47UH
L12	1-408-785-21	s	INDUCTOR, CHIP 47UH
L13	1-408-785-21	s	INDUCTOR, CHIP 47UH
L15	1-408-785-21	s	INDUCTOR, CHIP 47UH
L16	1-408-785-21	s	INDUCTOR, CHIP 47UH
L17	1-408-785-21	s	INDUCTOR, CHIP 47UH
L18	1-408-785-21	s	INDUCTOR, CHIP 47UH
L19	1-408-785-21	s	INDUCTOR, CHIP 47UH
L401	1-408-785-21	s	INDUCTOR, CHIP 47UH
L402	1-408-785-21	s	INDUCTOR, CHIP 47UH
L403	1-408-785-21	s	INDUCTOR, CHIP 47UH
L404	1-408-785-21	s	INDUCTOR, CHIP 47UH
L405	1-410-656-11	s	INDUCTOR, CHIP 150UH
L406	1-408-789-21	s	INDUCTOR, CHIP 100UH
L407	1-408-789-21	s	INDUCTOR, CHIP 100UH
L408	1-408-785-21	s	INDUCTOR, CHIP 47UH
L409	1-408-789-21	s	INDUCTOR, CHIP 100UH
L410	1-410-377-31	s	INDUCTOR, CHIP 4.7uH
L411	1-408-785-21	s	INDUCTOR, CHIP 47UH
L412	1-408-785-21	s	INDUCTOR, CHIP 47UH
L413	1-408-785-21	s	INDUCTOR, CHIP 47UH
L414	1-408-785-21	s	INDUCTOR, CHIP 47UH
L415	1-408-785-21	s	INDUCTOR, CHIP 47UH
L416	1-408-789-21	s	INDUCTOR, CHIP 100UH
L417	1-408-789-21	s	INDUCTOR, CHIP 100UH
L418	1-408-789-21	s	INDUCTOR, CHIP 100UH
L419	1-408-789-21	s	INDUCTOR, CHIP 100UH

(TBC-21 BOARD)

Ref. No. or Q'ty	Part No.	SP	Description
L421	1-408-785-21	s	INDUCTOR, CHIP 47UH
L422	1-410-388-21	s	INDUCTOR, CHIP 39uH
L423	1-410-388-21	s	INDUCTOR, CHIP 39uH
L424	1-410-369-11	s	INDUCTOR, CHIP 1UH
L701	1-408-789-21	s	INDUCTOR, CHIP 100UH
L702	1-408-785-21	s	INDUCTOR, CHIP 47UH
L703	1-408-785-21	s	INDUCTOR, CHIP 47UH
L704	1-408-785-21	s	INDUCTOR, CHIP 47UH
LV3	1-408-510-00	s	COIL VAR, 2.2uH
LV701	1-408-510-00	s	COIL VAR, 2.2uH
Q1	8-729-100-66	s	TRANSISTOR 2SC1623
Q2	8-729-100-66	s	TRANSISTOR 2SC1623
Q3	8-729-100-66	s	TRANSISTOR 2SC1623
Q4	8-729-109-41	s	TRANSISTOR 2SK94-X1
Q5	8-729-209-07	s	TRANSISTOR 2SC4213-B
Q6	8-729-109-41	s	TRANSISTOR 2SK94-X1
Q8	8-729-109-41	s	TRANSISTOR 2SK94-X1
Q9	8-729-905-18	s	TRANSISTOR DTC144EU
Q11	8-729-109-41	s	TRANSISTOR 2SK94-X1
Q12	8-729-117-32	s	TRANSISTOR 2SC4177
Q13	8-729-117-32	s	TRANSISTOR 2SC4177
Q14	8-729-117-32	s	TRANSISTOR 2SC4177
Q401	8-729-100-66	s	TRANSISTOR 2SC1623
Q402	8-729-100-66	s	TRANSISTOR 2SC1623
Q403	8-729-100-66	s	TRANSISTOR 2SC1623
Q404	8-729-100-66	s	TRANSISTOR 2SC1623
Q405	8-729-100-66	s	TRANSISTOR 2SC1623
Q406	8-729-100-66	s	TRANSISTOR 2SC1623
Q407	8-729-100-66	s	TRANSISTOR 2SC1623
Q408	8-729-100-66	s	TRANSISTOR 2SC1623
Q409	8-729-216-22	s	TRANSISTOR 2SA1162
Q411	8-729-100-66	s	TRANSISTOR 2SC1623
Q412	8-729-100-66	s	TRANSISTOR 2SC1623
Q413	8-729-100-66	s	TRANSISTOR 2SC1623
Q414	8-729-905-18	s	TRANSISTOR DTC144EU
Q415	8-729-905-18	s	TRANSISTOR DTC144EU
Q416	8-729-100-66	s	TRANSISTOR 2SC1623
Q417	8-729-100-66	s	TRANSISTOR 2SC1623
Q418	8-729-100-66	s	TRANSISTOR 2SC1623
Q419	8-729-100-66	s	TRANSISTOR 2SC1623
Q420	8-729-100-66	s	TRANSISTOR 2SC1623
Q421	8-729-100-66	s	TRANSISTOR 2SC1623
Q422	8-729-100-66	s	TRANSISTOR 2SC1623
Q423	8-729-100-66	s	TRANSISTOR 2SC1623
Q424	8-729-100-66	s	TRANSISTOR 2SC1623
Q425	8-729-209-07	s	TRANSISTOR 2SC4213-B
Q426	8-729-209-07	s	TRANSISTOR 2SC4213-B
Q427	8-729-905-18	s	TRANSISTOR DTC144EU
Q428	8-729-905-18	s	TRANSISTOR DTC144EU
Q701	8-729-117-32	s	TRANSISTOR 2SC4177
Q702	8-729-117-32	s	TRANSISTOR 2SC4177
Q703	8-729-117-32	s	TRANSISTOR 2SC4177
R1	1-216-835-11	s	METAL, CHIP 15K 5% 1/16W
R2	1-216-839-11	s	METAL, CHIP 33K 5% 1/16W
R3	1-216-825-11	s	METAL, CHIP 2.2K 5% 1/16W
R4	1-216-821-11	s	METAL, CHIP 1K 5% 1/16W
R5	1-216-835-11	s	METAL, CHIP 15K 5% 1/16W

(TBC-21 BOARD)

Ref. No. or Q'ty	Part No.	SP	Description
R6	1-216-839-11	s	METAL, CHIP 33K 5% 1/16W
R7	1-216-825-11	s	METAL, CHIP 2.2K 5% 1/16W
R8	1-216-857-11	s	METAL, CHIP 1M 5% 1/16W
R9	1-216-821-11	s	METAL, CHIP 1K 5% 1/16W
R10	1-216-837-11	s	METAL, CHIP 22K 5% 1/16W
R11	1-216-833-11	s	METAL, CHIP 10K 5% 1/16W
R12	1-216-821-11	s	METAL, CHIP 1K 5% 1/16W
R13	1-216-841-11	s	METAL, CHIP 47K 5% 1/16W
R15	1-216-841-11	s	METAL, CHIP 47K 5% 1/16W
R17	1-218-700-11	s	METAL, CHIP 2.2K 0.50% 1/16W
R18	1-218-716-11	s	METAL, CHIP 10K 0.50% 1/16W
R19	1-216-825-11	s	METAL, CHIP 2.2K 5% 1/16W
R20	1-216-845-11	s	METAL, CHIP 100K 5% 1/16W
R22	1-216-813-11	s	METAL, CHIP 220 5% 1/16W
R27	1-216-864-11	s	METAL, CHIP 0 5% 1/16W
R29	1-216-864-11	s	METAL, CHIP 0 5% 1/16W
R31	1-216-864-11	s	METAL, CHIP 0 5% 1/16W
R32	1-216-830-11	s	METAL, CHIP 5.6K 5% 1/16W
R33	1-218-295-11	s	METAL, CHIP 4.3K 5% 1/16W
R34	1-218-714-11	s	METAL, CHIP 8.2K 0.50% 1/16W
R35	1-216-814-11	s	METAL, CHIP 270 5% 1/16W
R36	1-218-724-11	s	METAL, CHIP 22K 0.50% 1/16W
R37	1-216-817-11	s	METAL, CHIP 470 5% 1/16W
R39	1-216-845-11	s	METAL, CHIP 100K 5% 1/16W
R40	1-216-855-11	s	METAL, CHIP 680K 5% 1/16W
R42	1-216-845-11	s	METAL, CHIP 100K 5% 1/16W
R43	1-216-855-11	s	METAL, CHIP 680K 5% 1/16W
R44	1-216-845-11	s	METAL, CHIP 100K 5% 1/16W
R45	1-216-855-11	s	METAL, CHIP 680K 5% 1/16W
R48	1-216-809-11	s	METAL, CHIP 100 5% 1/16W
R49	1-216-821-11	s	METAL, CHIP 1K 5% 1/16W
R50	1-218-295-11	s	METAL, CHIP 4.3K 5% 1/16W
R51	1-216-833-11	s	METAL, CHIP 10K 5% 1/16W
R53	1-216-809-11	s	METAL, CHIP 100 5% 1/16W
R54	1-216-809-11	s	METAL, CHIP 100 5% 1/16W
R55	1-218-714-11	s	METAL, CHIP 8.2K 0.50% 1/16W
R56	1-216-825-11	s	METAL, CHIP 2.2K 5% 1/16W
R57	1-218-714-11	s	METAL, CHIP 8.2K 0.50% 1/16W
R58	1-216-845-11	s	METAL, CHIP 100K 5% 1/16W
R64	1-218-708-11	s	METAL, CHIP 4.7K 0.50% 1/16W
R65	1-218-295-11	s	METAL, CHIP 4.3K 5% 1/16W
R66	1-218-724-11	s	METAL, CHIP 22K 0.50% 1/16W
R67	1-216-795-11	s	METAL, CHIP 6.8K 0.50% 1/16W
R68	1-218-295-11	s	METAL, CHIP 4.3K 5% 1/16W
R69	1-216-817-11	s	METAL, CHIP 470 5% 1/16W
R70	1-218-883-11	s	METAL, CHIP 33K 0.50 1/16W
R71	1-218-704-11	s	METAL, CHIP 3.3K 0.50% 1/16W
R72	1-216-817-11	s	METAL, CHIP 470 5% 1/16W
R73	1-216-823-11	s	METAL, CHIP 1.5K 5% 1/16W
R74	1-218-724-11	s	METAL, CHIP 22K 0.50% 1/16W
R75	1-218-724-11	s	METAL, CHIP 22K 0.50% 1/16W
R77	1-216-865-11	s	METAL, CHIP 3K 5% 1/16W
R79	1-216-827-11	s	METAL, CHIP 3.3K 5% 1/16W
R80	1-218-724-11	s	METAL, CHIP 22K 0.50% 1/16W
R81	1-216-817-11	s	METAL, CHIP 470 5% 1/16W
R82	1-218-706-11	s	METAL, CHIP 3.9K 0.50% 1/16W
R83	1-216-826-11	s	METAL, CHIP 2.7K 5% 1/16W
R84	1-216-841-11	s	METAL, CHIP 47K 5% 1/16W
R85	1-216-821-11	s	METAL, CHIP 1K 5% 1/16W

(TBC-21 BOARD)

Ref. No. or Q'ty	Part No.	SP	Description
R87	1-216-833-11	s	METAL, CHIP 10K 5% 1/16W
R88	1-216-845-11	s	METAL, CHIP 100K 5% 1/16W
R89	1-216-839-11	s	METAL, CHIP 33K 5% 1/16W
R90	1-216-825-11	s	METAL, CHIP 2.2K 5% 1/16W
R91	1-216-829-11	s	METAL, CHIP 4.7K 5% 1/16W
R92	1-216-813-11	s	METAL, CHIP 220 5% 1/16W
R93	1-218-680-11	s	METAL, CHIP 330 0.50% 1/16W
R94	1-216-845-11	s	METAL, CHIP 100K 5% 1/16W
R95	1-216-826-11	s	METAL, CHIP 2.7K 5% 1/16W
R96	1-216-845-11	s	METAL, CHIP 100K 5% 1/16W
R97	1-216-837-11	s	METAL, CHIP 22K 5% 1/16W
R98	1-216-828-11	s	METAL, CHIP 3.9K 5% 1/16W
R99	1-216-833-11	s	METAL, CHIP 10K 5% 1/16W
R100	1-216-809-11	s	METAL, CHIP 100 5% 1/16W
R102	1-216-841-11	s	METAL, CHIP 47K 5% 1/16W
R103	1-218-714-11	s	METAL, CHIP 8.2K 0.50% 1/16W
R104	1-218-714-11	s	METAL, CHIP 8.2K 0.50% 1/16W
R105	1-216-864-11	s	METAL, CHIP 0 5% 1/16W
R107	1-216-809-11	s	METAL, CHIP 100 5% 1/16W
R108	1-216-809-11	s	METAL, CHIP 100 5% 1/16W
R109	1-216-809-11	s	METAL, CHIP 100 5% 1/16W
R110	1-216-809-11	s	METAL, CHIP 100 5% 1/16W
R116	1-216-809-11	s	METAL, CHIP 100 5% 1/16W
R119	1-216-809-11	s	METAL, CHIP 100 5% 1/16W
R120	1-216-809-11	s	METAL, CHIP 100 5% 1/16W
R121	1-216-809-11	s	METAL, CHIP 100 5% 1/16W
R122	1-216-829-11	s	METAL, CHIP 4.7K 5% 1/16W
R123	1-216-809-11	s	METAL, CHIP 100 5% 1/16W
R136	1-216-809-11	s	METAL, CHIP 100 5% 1/16W
R143	1-216-809-11	s	METAL, CHIP 100 5% 1/16W
R401	1-216-833-11	s	METAL, CHIP 10K 5% 1/16W
R402	1-216-814-11	s	METAL, CHIP 270 5% 1/16W
R403	1-216-817-11	s	METAL, CHIP 470 5% 1/16W
R404	1-216-814-11	s	METAL, CHIP 270 5% 1/16W
R405	1-216-820-11	s	METAL, CHIP 820 5% 1/16W
R406	1-216-845-11	s	METAL, CHIP 100K 5% 1/16W
R407	1-216-833-11	s	METAL, CHIP 10K 5% 1/16W
R408	1-216-833-11	s	METAL, CHIP 10K 5% 1/16W
R409	1-216-820-11	s	METAL, CHIP 820 5% 1/16W
R410	1-216-821-11	s	METAL, CHIP 1K 5% 1/16W
R411	1-216-821-11	s	METAL, CHIP 1K 5% 1/16W
R412	1-216-823-11	s	METAL, CHIP 1.5K 5% 1/16W
R413	1-216-864-11	s	METAL, CHIP 0 5% 1/16W
R414	1-216-864-11	s	METAL, CHIP 0 5% 1/16W
R415	1-216-864-11	s	METAL, CHIP 0 5% 1/16W
R416	1-216-821-11	s	METAL, CHIP 1K 5% 1/16W
R417	1-216-827-11	s	METAL, CHIP 3.3K 5% 1/16W
R418	1-216-827-11	s	METAL, CHIP 3.3K 5% 1/16W
R419	1-216-817-11	s	METAL, CHIP 470 5% 1/16W
R420	1-216-838-11	s	METAL, CHIP 27K 5% 1/16W
R421	1-216-837-11	s	METAL, CHIP 22K 5% 1/16W
R422	1-216-837-11	s	METAL, CHIP 22K 5% 1/16W
R423	1-216-833-11	s	METAL, CHIP 10K 5% 1/16W
R424	1-216-837-11	s	METAL, CHIP 22K 5% 1/16W
R425	1-216-835-11	s	METAL, CHIP 15K 5% 1/16W
R426	1-216-833-11	s	METAL, CHIP 10K 5% 1/16W
R427	1-216-833-11	s	METAL, CHIP 10K 5% 1/16W
R428	1-216-825-11	s	METAL, CHIP 2.2K 5% 1/16W
R429	1-216-823-11	s	METAL, CHIP 1.5K 5% 1/16W

(TBC-21 BOARD)

Ref. No. or Q'ty	Part No.	SP	Description
R430	1-216-827-11	s	METAL, CHIP 3.3K 5% 1/16W
R431	1-216-809-11	s	METAL, CHIP 100 5% 1/16W
R432	1-216-829-11	s	METAL, CHIP 4.7K 5% 1/16W
R433	1-216-835-11	s	METAL, CHIP 15K 5% 1/16W
R434	1-216-839-11	s	METAL, CHIP 33K 5% 1/16W
R436	1-216-841-11	s	METAL, CHIP 47K 5% 1/16W
R437	1-216-833-11	s	METAL, CHIP 10K 5% 1/16W
R438	1-216-821-11	s	METAL, CHIP 1K 5% 1/16W
R439	1-216-809-11	s	METAL, CHIP 100 5% 1/16W
R440	1-216-821-11	s	METAL, CHIP 1K 5% 1/16W
R441	1-216-809-11	s	METAL, CHIP 100 5% 1/16W
R442	1-218-716-11	s	METAL, CHIP 10K 0.50% 1/16W
R443	1-218-716-11	s	METAL, CHIP 10K 0.50% 1/16W
R445	1-216-864-11	s	METAL, CHIP 0 5% 1/16W
R446	1-216-864-11	s	METAL, CHIP 0 5% 1/16W
R448	1-216-845-11	s	METAL, CHIP 100K 5% 1/16W
R449	1-216-855-11	s	METAL, CHIP 680K 5% 1/16W
R450	1-216-825-11	s	METAL, CHIP 2.2K 5% 1/16W
R451	1-216-807-11	s	METAL, CHIP 68 5% 1/16W
R452	1-216-821-11	s	METAL, CHIP 1K 5% 1/16W
R453	1-216-806-11	s	METAL, CHIP 56 5% 1/16W
R454	1-216-825-11	s	METAL, CHIP 2.2K 5% 1/16W
R455	1-216-821-11	s	METAL, CHIP 1K 5% 1/16W
R456	1-216-813-11	s	METAL, CHIP 220 5% 1/16W
R457	1-216-809-11	s	METAL, CHIP 100 5% 1/16W
R458	1-216-857-11	s	METAL, CHIP 1M 5% 1/16W
R459	1-216-839-11	s	METAL, CHIP 33K 5% 1/16W
R460	1-216-839-11	s	METAL, CHIP 33K 5% 1/16W
R461	1-216-833-11	s	METAL, CHIP 10K 5% 1/16W
R462	1-216-839-11	s	METAL, CHIP 33K 5% 1/16W
R463	1-216-821-11	s	METAL, CHIP 1K 5% 1/16W
R464	1-216-856-11	s	METAL, CHIP 820K 5% 1/16W
R465	1-216-852-11	s	METAL, CHIP 390K 5% 1/16W
R466	1-216-849-11	s	METAL, CHIP 220K 5% 1/16W
R467	1-216-845-11	s	METAL, CHIP 100K 5% 1/16W
R468	1-216-856-11	s	METAL, CHIP 820K 5% 1/16W
R469	1-216-852-11	s	METAL, CHIP 390K 5% 1/16W
R470	1-216-849-11	s	METAL, CHIP 220K 5% 1/16W
R471	1-216-845-11	s	METAL, CHIP 100K 5% 1/16W
R472	1-216-823-11	s	METAL, CHIP 1.5K 5% 1/16W
R473	1-216-833-11	s	METAL, CHIP 10K 5% 1/16W
R474	1-216-833-11	s	METAL, CHIP 10K 5% 1/16W
R475	1-216-857-11	s	METAL, CHIP 1M 5% 1/16W
R476	1-216-841-11	s	METAL, CHIP 47K 5% 1/16W
R477	1-216-841-11	s	METAL, CHIP 47K 5% 1/16W
R478	1-216-837-11	s	METAL, CHIP 22K 5% 1/16W
R479	1-216-811-11	s	METAL, CHIP 150 5% 1/16W
R480	1-216-815-11	s	METAL, CHIP 330 5% 1/16W
R481	1-216-857-11	s	METAL, CHIP 1M 5% 1/16W
R482	1-216-839-11	s	METAL, CHIP 33K 5% 1/16W
R483	1-216-839-11	s	METAL, CHIP 33K 5% 1/16W
R484	1-216-839-11	s	METAL, CHIP 33K 5% 1/16W
R485	1-216-841-11	s	METAL, CHIP 47K 5% 1/16W
R486	1-216-826-11	s	METAL, CHIP 2.7K 5% 1/16W
R487	1-218-724-11	s	METAL, CHIP 22K 0.50% 1/16W
R488	1-216-841-11	s	METAL, CHIP 47K 5% 1/16W
R489	1-216-833-11	s	METAL, CHIP 10K 5% 1/16W
R490	1-216-832-11	s	METAL, CHIP 8.2K 5% 1/16W
R491	1-216-828-11	s	METAL, CHIP 3.9K 5% 1/16W

(TBC-21 BOARD)

Ref. No. or Q'ty	Part No.	SP	Description
R492	1-216-836-11	s	METAL, CHIP 18K 5% 1/16W
R493	1-216-833-11	s	METAL, CHIP 10K 5% 1/16W
R494	1-216-829-11	s	METAL, CHIP 4.7K 5% 1/16W
R495	1-216-841-11	s	METAL, CHIP 47K 5% 1/16W
R496	1-216-864-11	s	METAL, CHIP 0 5% 1/16W
R498	1-216-864-11	s	METAL, CHIP 0 5% 1/16W
R500	1-216-864-11	s	METAL, CHIP 0 5% 1/16W
R502	1-216-864-11	s	METAL, CHIP 0 5% 1/16W
R504	1-216-864-11	s	METAL, CHIP 0 5% 1/16W
R506	1-216-841-11	s	METAL, CHIP 47K 5% 1/16W
R507	1-216-845-11	s	METAL, CHIP 100K 5% 1/16W
R509	1-216-864-11	s	METAL, CHIP 0 5% 1/16W
R510	1-216-857-11	s	METAL, CHIP 1M 5% 1/16W
R511	1-216-857-11	s	METAL, CHIP 1M 5% 1/16W
R512	1-216-864-11	s	METAL, CHIP 0 5% 1/16W
R514	1-216-864-11	s	METAL, CHIP 0 5% 1/16W
R516	1-218-484-11	s	METAL, CHIP 750 5% 1/16W
R517	1-218-698-11	s	METAL, CHIP 1.8K 0.50% 1/16W
R518	1-218-484-11	s	METAL, CHIP 750 5% 1/16W
R519	1-218-698-11	s	METAL, CHIP 1.8K 0.50% 1/16W
R520	1-216-855-11	s	METAL, CHIP 680K 5% 1/16W
R521	1-216-855-11	s	METAL, CHIP 680K 5% 1/16W
R522	1-218-700-11	s	METAL, CHIP 2.2K 0.50% 1/16W
R523	1-218-700-11	s	METAL, CHIP 2.2K 0.50% 1/16W
R524	1-216-822-11	s	METAL, CHIP 1.2K 5% 1/16W
R525	1-216-822-11	s	METAL, CHIP 1.2K 5% 1/16W
R526	1-216-837-11	s	METAL, CHIP 22K 5% 1/16W
R527	1-216-837-11	s	METAL, CHIP 22K 5% 1/16W
R528	1-216-809-11	s	METAL, CHIP 100 5% 1/16W
R529	1-216-809-11	s	METAL, CHIP 100 5% 1/16W
R534	1-216-833-11	s	METAL, CHIP 10K 5% 1/16W
R535	1-216-841-11	s	METAL, CHIP 47K 5% 1/16W
R536	1-216-833-11	s	METAL, CHIP 10K 5% 1/16W
R537	1-216-841-11	s	METAL, CHIP 47K 5% 1/16W
R538	1-216-823-11	s	METAL, CHIP 1.5K 5% 1/16W
R539	1-216-823-11	s	METAL, CHIP 1.5K 5% 1/16W
R540	1-216-809-11	s	METAL, CHIP 100 5% 1/16W
R541	1-216-833-11	s	METAL, CHIP 10K 5% 1/16W
R542	1-216-833-11	s	METAL, CHIP 10K 5% 1/16W
R543	1-216-827-11	s	METAL, CHIP 3.3K 5% 1/16W
R544	1-216-827-11	s	METAL, CHIP 3.3K 5% 1/16W
R545	1-218-700-11	s	METAL, CHIP 2.2K 0.50% 1/16W
R546	1-218-700-11	s	METAL, CHIP 2.2K 0.50% 1/16W
R547	1-216-809-11	s	METAL, CHIP 100 5% 1/16W
R548	1-216-835-11	s	METAL, CHIP 15K 5% 1/16W
R549	1-216-837-11	s	METAL, CHIP 22K 5% 1/16W
R550	1-216-835-11	s	METAL, CHIP 15K 5% 1/16W
R551	1-216-837-11	s	METAL, CHIP 22K 5% 1/16W
R552	1-218-716-11	s	METAL, CHIP 10K 0.50% 1/16W
R553	1-218-716-11	s	METAL, CHIP 10K 0.50% 1/16W
R554	1-216-833-11	s	METAL, CHIP 10K 5% 1/16W
R555	1-216-837-11	s	METAL, CHIP 22K 5% 1/16W
R556	1-216-837-11	s	METAL, CHIP 22K 5% 1/16W
R557	1-216-823-11	s	METAL, CHIP 1.5K 5% 1/16W
R558	1-216-821-11	s	METAL, CHIP 1K 5% 1/16W
R560	1-216-833-11	s	METAL, CHIP 10K 5% 1/16W
R561	1-216-837-11	s	METAL, CHIP 22K 5% 1/16W
R562	1-216-837-11	s	METAL, CHIP 22K 5% 1/16W
R563	1-216-823-11	s	METAL, CHIP 1.5K 5% 1/16W

(TBC-21 BOARD)

Ref. No. or Q'ty	Part No.	SP	Description
R564	1-216-821-11	s	METAL, CHIP 1K 5% 1/16W
R565	1-216-809-11	s	METAL, CHIP 100 5% 1/16W
R566	1-216-818-11	s	METAL, CHIP 560 5% 1/16W
R567	1-216-821-11	s	METAL, CHIP 1K 5% 1/16W
R568	1-218-675-11	s	METAL, CHIP 200 0.50% 1/16W
R569	1-216-823-11	s	METAL, CHIP 1.5K 5% 1/16W
R570	1-216-823-11	s	METAL, CHIP 1.5K 5% 1/16W
R571	1-216-833-11	s	METAL, CHIP 10K 5% 1/16W
R574	1-216-864-11	s	METAL, CHIP 0 5% 1/16W
R576	1-216-864-11	s	METAL, CHIP 0 5% 1/16W
R577	1-216-833-11	s	METAL, CHIP 10K 5% 1/16W
R578	1-216-809-11	s	METAL, CHIP 100 5% 1/16W
R579	1-216-837-11	s	METAL, CHIP 22K 5% 1/16W
R580	1-216-864-11	s	METAL, CHIP 0 5% 1/16W
R581	1-216-833-11	s	METAL, CHIP 10K 5% 1/16W
R585	1-216-841-11	s	METAL, CHIP 47K 5% 1/16W
R586	1-216-845-11	s	METAL, CHIP 100K 5% 1/16W
R587	1-216-841-11	s	METAL, CHIP 47K 5% 1/16W
R588	1-216-845-11	s	METAL, CHIP 100K 5% 1/16W
R589	1-216-845-11	s	METAL, CHIP 100K 5% 1/16W
R590	1-216-841-11	s	METAL, CHIP 47K 5% 1/16W
R591	1-216-845-11	s	METAL, CHIP 100K 5% 1/16W
R592	1-216-864-11	s	METAL, CHIP 0 5% 1/16W
R596	1-216-864-11	s	METAL, CHIP 0 5% 1/16W
R597	1-216-864-11	s	METAL, CHIP 0 5% 1/16W
R598	1-216-864-11	s	METAL, CHIP 0 5% 1/16W
R599	1-216-864-11	s	METAL, CHIP 0 5% 1/16W
R701	1-216-841-11	s	METAL, CHIP 47K 5% 1/16W
R702	1-216-809-11	s	METAL, CHIP 100 5% 1/16W
R703	1-216-809-11	s	METAL, CHIP 100 5% 1/16W
R704	1-216-841-11	s	METAL, CHIP 47K 5% 1/16W
R705	1-216-829-11	s	METAL, CHIP 4.7K 5% 1/16W
R706	1-216-820-11	s	METAL, CHIP 820 5% 1/16W
R707	1-216-855-11	s	METAL, CHIP 680K 5% 1/16W
R708	1-216-825-11	s	METAL, CHIP 2.2K 5% 1/16W
R709	1-216-807-11	s	METAL, CHIP 68 5% 1/16W
R710	1-216-821-11	s	METAL, CHIP 1K 5% 1/16W
R711	1-216-821-11	s	METAL, CHIP 1K 5% 1/16W
R712	1-216-825-11	s	METAL, CHIP 2.2K 5% 1/16W
R713	1-216-806-11	s	METAL, CHIP 56 5% 1/16W
R714	1-216-817-11	s	METAL, CHIP 470 5% 1/16W
R715	1-216-839-11	s	METAL, CHIP 33K 5% 1/16W
R716	1-216-821-11	s	METAL, CHIP 1K 5% 1/16W
R717	1-216-857-11	s	METAL, CHIP 1M 5% 1/16W
R719	1-216-833-11	s	METAL, CHIP 10K 5% 1/16W
R720	1-216-839-11	s	METAL, CHIP 33K 5% 1/16W
R721	1-216-839-11	s	METAL, CHIP 33K 5% 1/16W
R722	1-216-821-11	s	METAL, CHIP 1K 5% 1/16W
R723	1-216-827-11	s	METAL, CHIP 3.3K 5% 1/16W
R724	1-216-827-11	s	METAL, CHIP 3.3K 5% 1/16W
R725	1-216-821-11	s	METAL, CHIP 1K 5% 1/16W
R727	1-216-833-11	s	METAL, CHIP 10K 5% 1/16W
R728	1-216-845-11	s	METAL, CHIP 100K 5% 1/16W
R729	1-216-839-11	s	METAL, CHIP 33K 5% 1/16W
R730	1-216-825-11	s	METAL, CHIP 2.2K 5% 1/16W
R731	1-216-829-11	s	METAL, CHIP 4.7K 5% 1/16W
R732	1-216-813-11	s	METAL, CHIP 220 5% 1/16W
R733	1-216-815-11	s	METAL, CHIP 330 5% 1/16W
R734	1-216-809-11	s	METAL, CHIP 100 5% 1/16W

(TBC-21 BOARD)

Ref. No. or Q'ty	Part No.	SP	Description
R735	1-216-836-11	s	METAL, CHIP 18K 5% 1/16W
R736	1-218-732-11	s	METAL, CHIP 47K 0.50% 1/16W
R737	1-216-809-11	s	METAL, CHIP 100 5% 1/16W
R738	1-216-809-11	s	METAL, CHIP 100 5% 1/16W
R912	1-216-864-11	s	METAL, CHIP 0 5% 1/16W
RV1	1-238-801-11	s	RES, ADJ METAL 5K
RV2	1-238-802-11	s	RES, ADJ METAL 10K
RV3	1-238-783-11	s	RES, ADJ, CERMET 500
RV4	1-238-801-11	s	RES, ADJ METAL 5K
RV401	1-238-798-11	s	RES, ADJ METAL 500
RV402	1-238-799-11	s	RES, ADJ METAL 1K
RV403	1-238-802-11	s	RES, ADJ METAL 10K
RV701	1-238-800-11	s	RES, ADJ METAL 2K
RV702	1-238-802-11	s	RES, ADJ METAL 10K
X1	1-577-089-11	s	VCO, CRYSTAL 14.318180MHz
X2	1-577-089-11	s	VCO, CRYSTAL 14.318180MHz
X3	1-527-227-00	s	CRYSTAL 14.31818MHz
X401	1-527-722-00	s	CRYSTAL 14.31818MHz
X701	1-527-227-00	s	CRYSTAL 14.31818MHz

TR-72 BOARD

Ref. No. or Q'ty	Part No.	SP	Description
1pc	A-8262-577A	s	SENSOR ASSY

TS-74L BOARD

Ref. No. or Q'ty	Part No.	SP	Description
1pc	A-7070-628-A	o	MOUNTED CIRCUIT BOARD, TS-74 (LEFT)
Q715	8-729-700-11	s	NJL7141E-N

TS-74R BOARD

Ref. No. or Q'ty	Part No.	SP	Description
1pc	A-7070-627-A	o	MOUNTED CIRCUIT BOARD, TS-74 (RIGHT)
Q715	8-729-700-11	s	NJL7141E-N

VA-111 BOARD

Ref. No. or Q'ty	Part No.	SP	Description
1pc	A-8271-228-A	o	MOUNTED CIRCUIT BOARD, VA-111
2pcs	2-251-622-11	s	LEVER, PC BOARD
C101	1-126-101-11	s	ELECT 100uF 20% 16V
C102	1-162-970-11	s	CERAMIC, CHIP 0.01uF 10% 25V
C103	1-124-477-11	s	ELECT 47uF 20% 25V
C104	1-124-477-11	s	ELECT 47uF 20% 25V
C105	1-124-477-11	s	ELECT 47uF 20% 25V
C106	1-163-124-00	s	CERAMIC, CHIP 200PF 5% 50V
C107	1-162-970-11	s	CERAMIC, CHIP 0.01uF 10% 25V
C108	1-124-477-11	s	ELECT 47uF 20% 25V
C109	1-124-907-11	s	ELECT 10uF 20% 50V
C110	1-124-907-11	s	ELECT 10uF 20% 50V
C111	1-163-035-00	s	CERAMIC, CHIP 0.047uF 50V
C112	1-124-907-11	s	ELECT 10uF 20% 50V
C113	1-162-921-11	s	CERAMIC, CHIP 33PF 5% 50V
C114	1-124-907-11	s	ELECT 10uF 20% 50V
C115	1-124-907-11	s	ELECT 10uF 20% 50V
C116	1-124-907-11	s	ELECT 10uF 20% 50V
C117	1-163-035-00	s	CERAMIC, CHIP 0.047uF 50V
C118	1-163-275-11	s	CERAMIC, CHIP 0.001uF 5% 50V
C119	1-163-133-00	s	CERAMIC, CHIP 470PF 5% 50V
C120	1-124-443-00	s	ELECT 100uF 20% 10V
C121	1-163-035-00	s	CERAMIC, CHIP 0.047uF 50V
C122	1-162-970-11	s	CERAMIC, CHIP 0.01uF 10% 25V
C123	1-124-477-11	s	ELECT 47uF 20% 25V
C124	1-162-970-11	s	CERAMIC, CHIP 0.01uF 10% 25V
C125	1-124-477-11	s	ELECT 47uF 20% 25V
C126	1-124-477-11	s	ELECT 47uF 20% 25V
C127	1-162-970-11	s	CERAMIC, CHIP 0.01uF 10% 25V
C128	1-124-477-11	s	ELECT 47uF 20% 25V
C129	1-124-477-11	s	ELECT 47uF 20% 25V
C130	1-126-233-11	s	ELECT 22uF 20% 50V
C131	1-128-057-11	s	ELECT 330uF 20% 6.3V
C132	1-128-057-11	s	ELECT 330uF 20% 6.3V
C133	1-162-970-11	s	CERAMIC, CHIP 0.01uF 10% 25V
C134	1-162-970-11	s	CERAMIC, CHIP 0.01uF 10% 25V
C135	1-126-101-11	s	ELECT 100uF 20% 16V
C136	1-162-970-11	s	CERAMIC, CHIP 0.01uF 10% 25V
C137	1-162-970-11	s	CERAMIC, CHIP 0.01uF 10% 25V
C138	1-162-970-11	s	CERAMIC, CHIP 0.01uF 10% 25V
C139	1-164-227-11	s	CERAMIC, CHIP 0.022uF 10% 25V
C145	1-162-970-11	s	CERAMIC, CHIP 0.01uF 10% 25V
C146	1-162-970-11	s	CERAMIC, CHIP 0.01uF 10% 25V
C147	1-162-970-11	s	CERAMIC, CHIP 0.01uF 10% 25V
C148	1-162-970-11	s	CERAMIC, CHIP 0.01uF 10% 25V
C149	1-164-227-11	s	CERAMIC, CHIP 0.022uF 10% 25V
C150	1-164-227-11	s	CERAMIC, CHIP 0.022uF 10% 25V
C151	1-124-477-11	s	ELECT 47uF 20% 25V
C152	1-163-038-00	s	CERAMIC, CHIP 0.1uF 25V
C153	1-163-035-00	s	CERAMIC, CHIP 0.047uF 50V
C154	1-126-233-11	s	ELECT 22uF 20% 50V
C155	1-126-233-11	s	ELECT 22uF 20% 50V
C156	1-128-057-11	s	ELECT 330uF 20% 6.3V
C157	1-162-970-11	s	CERAMIC, CHIP 0.01uF 10% 25V
C158	1-128-057-11	s	ELECT 330uF 20% 6.3V
C159	1-162-970-11	s	CERAMIC, CHIP 0.01uF 10% 25V
C160	1-124-477-11	s	ELECT 47uF 20% 25V
C161	1-162-970-11	s	CERAMIC, CHIP 0.01uF 10% 25V

(VA-111 BOARD)

Ref. No. or Q'ty	Part No.	SP	Description
C162	1-124-477-11	s	ELECT 47uF 20% 25V
C163	1-162-919-11	s	CERAMIC, CHIP 22PF 5% 50V
C165	1-162-927-11	s	CERAMIC, CHIP 100PF 5% 50V
C166	1-163-124-00	s	CERAMIC, CHIP 200PF 5% 50V
C167	1-164-217-11	s	CERAMIC, CHIP 150PF 5% 50V
C168	1-163-275-11	s	CERAMIC, CHIP 0.001uF 5% 50V
C169	1-164-227-11	s	CERAMIC, CHIP 0.022uF 10% 25V
C170	1-164-227-11	s	CERAMIC, CHIP 0.022uF 10% 25V
C171	1-163-275-11	s	CERAMIC, CHIP 0.001uF 5% 50V
C172	1-162-970-11	s	CERAMIC, CHIP 0.01uF 10% 25V
C173	1-124-907-11	s	ELECT 10uF 20% 50V
C174	1-124-907-11	s	ELECT 10uF 20% 50V
C175	1-162-970-11	s	CERAMIC, CHIP 0.01uF 10% 25V
C176	1-162-970-11	s	CERAMIC, CHIP 0.01uF 10% 25V
C177	1-162-917-11	s	CERAMIC, CHIP 15PF 5% 50V
C178	1-162-970-11	s	CERAMIC, CHIP 0.01uF 10% 25V
C179	1-163-038-00	s	CERAMIC, CHIP 0.1uF 25V
C180	1-162-295-11	s	CERAMIC, CHIP 68PF 5% 50V
C181	1-162-923-11	s	CERAMIC, CHIP 47PF 5% 50V
C182	1-162-916-11	s	CERAMIC, CHIP 12PF 5% 50V
C183	1-126-101-11	s	ELECT 100uF 20% 16V
C184	1-162-970-11	s	CERAMIC, CHIP 0.01uF 10% 25V
C185	1-163-038-00	s	CERAMIC, CHIP 0.1uF 25V
C186	1-162-970-11	s	CERAMIC, CHIP 0.01uF 10% 25V
C187	1-163-038-00	s	CERAMIC, CHIP 0.1uF 25V
C189	1-162-970-11	s	CERAMIC, CHIP 0.01uF 10% 25V
C190	1-162-970-11	s	CERAMIC, CHIP 0.01uF 10% 25V
C191	1-162-970-11	s	CERAMIC, CHIP 0.01uF 10% 25V
C192	1-163-038-00	s	CERAMIC, CHIP 0.1uF 25V
C193	1-162-970-11	s	CERAMIC, CHIP 0.01uF 10% 25V
C194	1-126-101-11	s	ELECT 100uF 20% 16V
C195	1-162-970-11	s	CERAMIC, CHIP 0.01uF 10% 25V
C196	1-126-101-11	s	ELECT 100uF 20% 16V
C197	1-164-227-11	s	CERAMIC, CHIP 0.022uF 10% 25V
C198	1-124-477-11	s	ELECT 47uF 20% 25V
C199	1-124-907-11	s	ELECT 10uF 20% 50V
C200	1-124-477-11	s	ELECT 47uF 20% 25V
C201	1-124-443-00	s	ELECT 100uF 20% 10V
C202	1-162-917-11	s	CERAMIC, CHIP 15PF 5% 50V
C203	1-124-907-11	s	ELECT 10uF 20% 50V
C204	1-124-907-11	s	ELECT 10uF 20% 50V
C205	1-126-101-11	s	ELECT 100uF 20% 16V
C206	1-126-101-11	s	ELECT 100uF 20% 16V
C207	1-124-477-11	s	ELECT 47uF 20% 25V
C208	1-126-101-11	s	ELECT 100uF 20% 16V
C209	1-162-970-11	s	CERAMIC, CHIP 0.01uF 10% 25V
C210	1-162-970-11	s	CERAMIC, CHIP 0.01uF 10% 25V
C211	1-124-477-11	s	ELECT 47uF 20% 25V
C212	1-124-477-11	s	ELECT 47uF 20% 25V
C213	1-124-477-11	s	ELECT 47uF 20% 25V
C214	1-126-233-11	s	ELECT 22uF 20% 50V
C215	1-162-970-11	s	CERAMIC, CHIP 0.01uF 10% 25V
C216	1-128-057-11	s	ELECT 330uF 20% 6.3V
C217	1-162-970-11	s	CERAMIC, CHIP 0.01uF 10% 25V
C218	1-128-057-11	s	ELECT 330uF 20% 6.3V
C219	1-124-477-11	s	ELECT 47uF 20% 25V
C220	1-162-970-11	s	CERAMIC, CHIP 0.01uF 10% 25V
C221	1-126-101-11	s	ELECT 100uF 20% 16V
C222	1-162-927-11	s	CERAMIC, CHIP 100PF 5% 50V

(VA-111 BOARD)

Ref. No. or Q'ty	Part No.	SP	Description
C223	1-164-222-11	s	CERAMIC 0.22uF 25V
C224	1-124-477-11	s	ELECT 47uF 20% 25V
C225	1-162-921-11	s	CERAMIC, CHIP 33PF 5% 50V
C226	1-124-477-11	s	ELECT 47uF 20% 25V
C227	1-162-927-11	s	CERAMIC, CHIP 100PF 5% 50V
C228	1-124-477-11	s	ELECT 47uF 20% 25V
C229	1-126-101-11	s	ELECT 100uF 20% 16V
C230	1-124-477-11	s	ELECT 47uF 20% 25V
C231	1-126-233-11	s	ELECT 22uF 20% 50V
C232	1-162-970-11	s	CERAMIC, CHIP 0.01uF 10% 25V
C233	1-128-057-11	s	ELECT 330uF 20% 6.3V
C234	1-162-970-11	s	CERAMIC, CHIP 0.01uF 10% 25V
C235	1-128-057-11	s	ELECT 330uF 20% 6.3V
C236	1-162-927-11	s	CERAMIC, CHIP 100PF 5% 50V
C237	1-124-477-11	s	ELECT 47uF 20% 25V
C238	1-135-070-00	s	TANTALUM, CHIP 0.1uF 10% 35V
C239	1-163-035-00	s	CERAMIC, CHIP 0.047uF 50V
C240	1-163-133-00	s	CERAMIC, CHIP 470PF 5% 50V
C250	1-164-227-11	s	CERAMIC, CHIP 0.022uF 10% 25V
C251	1-124-477-11	s	ELECT 47uF 20% 25V
C252	1-164-227-11	s	CERAMIC, CHIP 0.022uF 10% 25V
C253	1-124-477-11	s	ELECT 47uF 20% 25V
C254	1-162-970-11	s	CERAMIC, CHIP 0.01uF 10% 25V
C256	1-164-227-11	s	CERAMIC, CHIP 0.022uF 10% 25V
C258	1-164-160-11	s	CERAMIC, CHIP 20PF 5% 50V
C259	1-164-160-11	s	CERAMIC, CHIP 20PF 5% 50V
C260	1-163-133-00	s	CERAMIC, CHIP 470PF 5% 50V
C261	1-126-101-11	s	ELECT 100uF 20% 16V
C262	1-162-970-11	s	CERAMIC, CHIP 0.01uF 10% 25V
C263	1-163-035-00	s	CERAMIC, CHIP 0.047uF 50V
C264	1-163-038-00	s	CERAMIC, CHIP 0.1uF 25V
C265	1-162-925-11	s	CERAMIC, CHIP 68PF 5% 50V
C266	1-162-970-11	s	CERAMIC, CHIP 0.01uF 10% 25V
C267	1-126-101-11	s	ELECT 100uF 20% 16V
C268	1-163-038-00	s	CERAMIC, CHIP 0.1uF 25V
C269	1-162-915-11	s	CERAMIC, CHIP 10PF 50V
C270	1-162-925-11	s	CERAMIC, CHIP 68PF 5% 50V
C271	1-162-927-11	s	CERAMIC, CHIP 100PF 5% 50V
C801	1-162-915-11	s	CERAMIC, CHIP 10PF 50V
C802	1-135-125-21	s	TANTALUM, CHIP 33uF 20% 10V
C803	1-135-125-21	s	TANTALUM, CHIP 33uF 20% 10V
C804	1-163-038-00	s	CERAMIC, CHIP 0.1uF 25V
C805	1-163-035-00	s	CERAMIC, CHIP 0.047uF 50V
C806	1-135-145-11	s	TANTALUM, CHIP 0.47uF 10% 35V
C807	1-126-101-11	s	ELECT 100uF 20% 16V
C808	1-164-227-11	s	CERAMIC, CHIP 0.022uF 10% 25V
C809	1-126-101-11	s	ELECT 100uF 20% 16V
C810	1-124-126-00	s	ELECT 47uF 20% 25V
C811	1-164-227-11	s	CERAMIC, CHIP 0.022uF 10% 25V
C812	1-135-125-21	s	TANTALUM, CHIP 33uF 20% 10V
C813	1-124-443-00	s	ELECT 100uF 20% 10V
C814	1-124-443-00	s	ELECT 100uF 20% 10V
C815	1-164-227-11	s	CERAMIC, CHIP 0.022uF 10% 25V
C816	1-164-227-11	s	CERAMIC, CHIP 0.022uF 10% 25V
C817	1-124-443-00	s	ELECT 100uF 20% 10V
C818	1-124-443-00	s	ELECT 100uF 20% 10V
C819	1-124-443-00	s	ELECT 100uF 20% 10V
C820	1-162-924-11	s	CERAMIC 56PF 5% 50V
C821	1-164-227-11	s	CERAMIC, CHIP 0.022uF 10% 25V

(VA-111 BOARD)

Ref. No. or Q'ty	Part No.	SP	Description
C822	1-124-477-11	s	ELECT 47uF 20% 25V
C823	1-162-927-11	s	CERAMIC, CHIP 100PF 5% 50V
C824	1-162-927-11	s	CERAMIC, CHIP 100PF 5% 50V
C825	1-164-227-11	s	CERAMIC, CHIP 0.022uF 10% 25V
C826	1-164-160-11	s	CERAMIC, CHIP 20PF 5% 50V
C827	1-164-218-11	s	CERAMIC, CHIP 180PF 50V
C828	1-124-126-00	s	ELECT 47uF 20% 25V
C829	1-124-126-00	s	ELECT 47uF 20% 25V
C830	1-164-227-11	s	CERAMIC, CHIP 0.022uF 10% 25V
C831	1-164-227-11	s	CERAMIC, CHIP 0.022uF 10% 25V
C832	1-164-227-11	s	CERAMIC, CHIP 0.022uF 10% 25V
C833	1-164-227-11	s	CERAMIC, CHIP 0.022uF 10% 25V
C834	1-162-915-11	s	CERAMIC, CHIP 10PF 50V
C835	1-164-227-11	s	CERAMIC, CHIP 0.022uF 10% 25V
C836	1-164-227-11	s	CERAMIC, CHIP 0.022uF 10% 25V
C837	1-162-927-11	s	CERAMIC, CHIP 100PF 5% 50V
C838	1-164-227-11	s	CERAMIC, CHIP 0.022uF 10% 25V
C839	1-124-443-00	s	ELECT 100uF 20% 10V
C840	1-124-443-00	s	ELECT 100uF 20% 10V
C841	1-162-924-11	s	CERAMIC 56PF 5% 50V
C844	1-124-477-11	s	ELECT 47uF 20% 25V
C845	1-164-227-11	s	CERAMIC, CHIP 0.022uF 10% 25V
C846	1-162-919-11	s	CERAMIC, CHIP 22PF 5% 50V
C847	1-164-227-11	s	CERAMIC, CHIP 0.022uF 10% 25V
C848	1-124-477-11	s	ELECT 47uF 20% 25V
C849	1-164-227-11	s	CERAMIC, CHIP 0.022uF 10% 25V
C850	1-162-921-11	s	CERAMIC, CHIP 33PF 5% 50V
C851	1-163-125-00	s	CERAMIC, CHIP 220PF 5% 50V
C852	1-164-227-11	s	CERAMIC, CHIP 0.022uF 10% 25V
C853	1-164-227-11	s	CERAMIC, CHIP 0.022uF 10% 25V
C854	1-162-924-11	s	CERAMIC 56PF 5% 50V
C855	1-162-924-11	s	CERAMIC 56PF 5% 50V
C856	1-164-227-11	s	CERAMIC, CHIP 0.022uF 10% 25V
C857	1-124-477-11	s	ELECT 47uF 20% 25V
C859	1-124-477-11	s	ELECT 47uF 20% 25V
C860	1-164-227-11	s	CERAMIC, CHIP 0.022uF 10% 25V
C861	1-164-227-11	s	CERAMIC, CHIP 0.022uF 10% 25V
C862	1-162-922-11	s	CERAMIC, CHIP 39PF 5% 50V
C863	1-162-921-11	s	CERAMIC, CHIP 33PF 5% 50V
C864	1-124-477-11	s	ELECT 47uF 20% 25V
C865	1-164-227-11	s	CERAMIC, CHIP 0.022uF 10% 25V
C866	1-162-970-11	s	CERAMIC, CHIP 0.01uF 10% 25V
CN609	1-573-782-21	o	CONNECTOR, PHEC 60P, MALE
CN610	1-573-782-21	o	CONNECTOR, PHEC 60P, MALE
CV101	1-141-322-11	s	CAP, VAR, TRIMMER 20PF
D101	8-719-104-10	s	DIODE 1SS99
D102	8-719-104-10	s	DIODE 1SS99
D103	8-719-104-10	s	DIODE 1SS99
D104	8-719-104-10	s	DIODE 1SS99
D105	8-719-104-10	s	DIODE 1SS99
D106	8-719-104-10	s	DIODE 1SS99
D107	8-719-941-86	s	DIODE DAN202U
D108	8-719-941-86	s	DIODE DAN202U
D109	8-719-941-86	s	DIODE DAN202U
D110	8-719-911-19	s	DIODE 1SS119
D801	8-719-941-86	s	DIODE DAN202U
D802	8-719-800-76	s	DIODE 1SS226

(VA-111 BOARD)

Ref. No. or Q'ty	Part No.	SP	Description
D803	8-719-941-86	s	DIODE DAN202U
DL101	1-415-402-11	s	DELAY LINE 300nS
DL103	1-415-402-11	s	DELAY LINE 300nS
FL101	1-235-474-11	s	FILTER, LOW-PASS
FL102	1-236-040-11	s	FILTER, LOW-PASS
FL103	1-235-474-11	s	FILTER, LOW-PASS
FL104	1-409-410-11	s	FILTER, TRAP 4.4MHz
FL801	1-235-759-11	s	FILTER, LOW-PASS
FL802	1-235-161-00	s	FILTER, BANDPASS 3.58MHz
IC101	8-759-710-86	s	IC NJM2233BM-T1
IC102	8-759-925-60	s	IC BA401
IC103	8-759-925-60	s	IC BA401
IC104	8-752-015-81	s	IC CX20158
IC105	8-759-710-86	s	IC NJM2233BM-T1
IC106	8-759-925-60	s	IC BA401
IC107	8-752-015-81	s	IC CX20158
IC108	8-752-015-81	s	IC CX20158
IC109	8-759-111-69	s	IC UPC1037HA
IC110	8-759-710-86	s	IC NJM2233BM-T1
IC111	8-759-925-60	s	IC BA401
IC112	8-752-015-81	s	IC CX20158
IC113	8-759-009-07	s	IC MC14053BF
IC114	8-752-015-81	s	IC CX20158
IC115	8-759-201-47	s	IC TA7357AP
IC116	8-759-710-86	s	IC NJM2233BM-T1
IC117	8-759-927-46	s	IC SN74HC00NS
IC801	8-759-014-29	s	IC MC34184M
IC802	8-759-908-17	s	IC TL082CPS
IC803	8-759-947-82	s	IC TL610CPS
IC804	8-752-015-81	s	IC CX20158
IC805	8-759-239-55	s	IC TC74HC123AF
IC806	8-759-937-61	s	IC S-81230AG
IC807	8-759-941-79	s	IC S-80230AG
IC808	8-759-925-74	s	IC TC74HC04NS
IC809	8-759-030-55	s	IC MC1496M
L101	1-408-785-21	s	INDUCTOR, CHIP 47UH
L102	1-410-087-31	s	INDUCTOR 10mH
L103	1-408-785-21	s	INDUCTOR, CHIP 47UH
L104	1-408-785-21	s	INDUCTOR, CHIP 47UH
L107	1-408-785-21	s	INDUCTOR, CHIP 47UH
L108	1-410-656-11	s	INDUCTOR, CHIP 150UH
L109	1-408-785-21	s	INDUCTOR, CHIP 47UH
L110	1-408-785-21	s	INDUCTOR, CHIP 47UH
L111	1-408-785-21	s	INDUCTOR, CHIP 47UH
L112	1-408-785-21	s	INDUCTOR, CHIP 47UH
L113	1-410-388-21	s	INDUCTOR, CHIP 39uH
L114	1-410-391-11	s	INDUCTOR, CHIP 68uH
L115	1-410-387-11	s	INDUCTOR, CHIP 33uH
L118	1-408-785-21	s	INDUCTOR, CHIP 47UH
L119	1-408-785-21	s	INDUCTOR, CHIP 47UH
L120	1-410-390-11	s	INDUCTOR, CHIP 56uH
L121	1-410-655-31	s	INDUCTOR, CHIP 120uH
L122	1-410-087-31	s	INDUCTOR 10mH
L123	1-408-785-21	s	INDUCTOR, CHIP 47UH
L124	1-408-785-21	s	INDUCTOR, CHIP 47UH
L125	1-408-785-21	s	INDUCTOR, CHIP 47UH

(VA-111 BOARD)

Ref. No. or Q'ty	Part No.	SP	Description
L126	1-408-785-21	s	INDUCTOR, CHIP 47UH
L127	1-410-393-11	s	INDUCTOR, CHIP 100UH
L128	1-408-785-21	s	INDUCTOR, CHIP 47UH
L129	1-408-785-21	s	INDUCTOR, CHIP 47UH
L130	1-410-392-11	s	INDUCTOR, CHIP 82uH
L131	1-412-282-41	s	INDUCTOR, CHIP 470UH
L132	1-408-785-21	s	INDUCTOR, CHIP 47UH
L133	1-408-785-21	s	INDUCTOR, CHIP 47UH
L134	1-408-785-21	s	INDUCTOR, CHIP 47UH
L135	1-410-381-11	s	INDUCTOR, CHIP 10UH
L136	1-408-785-21	s	INDUCTOR, CHIP 47UH
L140	1-408-785-21	s	INDUCTOR, CHIP 47UH
L141	1-410-381-11	s	INDUCTOR, CHIP 10UH
L142	1-408-785-21	s	INDUCTOR, CHIP 47UH
L506	1-408-785-21	s	INDUCTOR, CHIP 47UH
L801	1-410-381-11	s	INDUCTOR, CHIP 10UH
L802	1-408-785-21	s	INDUCTOR, CHIP 47UH
L803	1-408-785-21	s	INDUCTOR, CHIP 47UH
L804	1-408-785-21	s	INDUCTOR, CHIP 47UH
L805	1-408-785-21	s	INDUCTOR, CHIP 47UH
L806	1-410-380-31	s	INDUCTOR, CHIP 8.2uH
L807	1-408-785-21	s	INDUCTOR, CHIP 47UH
L808	1-410-380-31	s	INDUCTOR, CHIP 8.2uH
L809	1-408-785-21	s	INDUCTOR, CHIP 47UH
L810	1-408-785-21	s	INDUCTOR, CHIP 47UH
L811	1-408-785-21	s	INDUCTOR, CHIP 47UH
L812	1-410-391-11	s	INDUCTOR, CHIP 68uH
L813	1-410-386-11	s	INDUCTOR, CHIP 27uH
L814	1-410-392-11	s	INDUCTOR, CHIP 82uH
L815	1-408-785-21	s	INDUCTOR, CHIP 47UH
L816	1-408-785-21	s	INDUCTOR, CHIP 47UH
L817	1-410-381-11	s	INDUCTOR, CHIP 10UH
L818	1-410-393-11	s	INDUCTOR, CHIP 100UH
Q101	8-729-120-28	s	TRANSISTOR 2SC1623-L5L6
Q102	8-729-120-28	s	TRANSISTOR 2SC1623-L5L6
Q103	8-729-120-28	s	TRANSISTOR 2SC1623-L5L6
Q104	8-729-120-28	s	TRANSISTOR 2SC1623-L5L6
Q105	8-729-120-28	s	TRANSISTOR 2SC1623-L5L6
Q106	8-729-120-28	s	TRANSISTOR 2SC1623-L5L6
Q107	8-729-905-18	s	TRANSISTOR DTC144EU
Q108	8-729-905-18	s	TRANSISTOR DTC144EU
Q109	8-729-905-18	s	TRANSISTOR DTC144EU
Q110	8-729-905-18	s	TRANSISTOR DTC144EU
Q111	8-729-120-28	s	TRANSISTOR 2SC1623-L5L6
Q112	8-729-905-18	s	TRANSISTOR DTC144EU
Q113	8-729-120-28	s	TRANSISTOR 2SC1623-L5L6
Q114	8-729-120-28	s	TRANSISTOR 2SC1623-L5L6
Q115	8-729-120-28	s	TRANSISTOR 2SC1623-L5L6
Q116	8-729-120-28	s	TRANSISTOR 2SC1623-L5L6
Q117	8-729-120-28	s	TRANSISTOR 2SC1623-L5L6
Q118	8-729-120-28	s	TRANSISTOR 2SC1623-L5L6
Q119	8-729-120-28	s	TRANSISTOR 2SC1623-L5L6
Q120	8-729-120-28	s	TRANSISTOR 2SC1623-L5L6
Q121	8-729-120-28	s	TRANSISTOR 2SC1623-L5L6
Q122	8-729-120-28	s	TRANSISTOR 2SC1623-L5L6
Q123	8-729-120-28	s	TRANSISTOR 2SC1623-L5L6
Q124	8-729-120-28	s	TRANSISTOR 2SC1623-L5L6
Q125	8-729-120-28	s	TRANSISTOR 2SC1623-L5L6

(VA-111 BOARD)

Ref. No. or Q'ty	Part No.	SP	Description
Q126	8-729-120-28	s	TRANSISTOR 2SC1623-L5L6
Q127	8-729-120-28	s	TRANSISTOR 2SC1623-L5L6
Q129	8-729-120-28	s	TRANSISTOR 2SC1623-L5L6
Q130	8-729-120-28	s	TRANSISTOR 2SC1623-L5L6
Q131	8-729-120-28	s	TRANSISTOR 2SC1623-L5L6
Q132	8-729-905-23	s	TRANSISTOR 2SA1576-R
Q133	8-729-905-23	s	TRANSISTOR 2SA1576-R
Q134	8-729-905-23	s	TRANSISTOR 2SA1576-R
Q135	8-729-905-23	s	TRANSISTOR 2SA1576-R
Q136	8-729-120-28	s	TRANSISTOR 2SC1623-L5L6
Q137	8-729-120-28	s	TRANSISTOR 2SC1623-L5L6
Q138	8-729-905-23	s	TRANSISTOR 2SA1576-R
Q139	8-729-120-28	s	TRANSISTOR 2SC1623-L5L6
Q140	8-729-905-23	s	TRANSISTOR 2SA1576-R
Q141	8-729-120-28	s	TRANSISTOR 2SC1623-L5L6
Q142	8-729-120-28	s	TRANSISTOR 2SC1623-L5L6
Q143	8-729-120-28	s	TRANSISTOR 2SC1623-L5L6
Q144	8-729-120-28	s	TRANSISTOR 2SC1623-L5L6
Q145	8-729-120-28	s	TRANSISTOR 2SC1623-L5L6
Q146	8-729-120-28	s	TRANSISTOR 2SC1623-L5L6
Q147	8-729-120-28	s	TRANSISTOR 2SC1623-L5L6
Q148	8-729-120-28	s	TRANSISTOR 2SC1623-L5L6
Q149	8-729-120-28	s	TRANSISTOR 2SC1623-L5L6
Q151	8-729-905-23	s	TRANSISTOR 2SA1576-R
Q152	8-729-120-28	s	TRANSISTOR 2SC1623-L5L6
Q153	8-729-120-28	s	TRANSISTOR 2SC1623-L5L6
Q154	8-729-905-23	s	TRANSISTOR 2SA1576-R
Q155	8-729-905-23	s	TRANSISTOR 2SA1576-R
Q156	8-729-120-28	s	TRANSISTOR 2SC1623-L5L6
Q157	8-729-120-28	s	TRANSISTOR 2SC1623-L5L6
Q158	8-729-905-23	s	TRANSISTOR 2SA1576-R
Q159	8-729-120-28	s	TRANSISTOR 2SC1623-L5L6
Q160	8-729-120-28	s	TRANSISTOR 2SC1623-L5L6
Q161	8-729-120-28	s	TRANSISTOR 2SC1623-L5L6
Q162	8-729-120-28	s	TRANSISTOR 2SC1623-L5L6
Q171	8-729-120-28	s	TRANSISTOR 2SC1623-L5L6
Q172	8-729-120-28	s	TRANSISTOR 2SC1623-L5L6
Q173	8-729-905-18	s	TRANSISTOR DTC144EU
Q174	8-729-120-28	s	TRANSISTOR 2SC1623-L5L6
Q175	8-729-119-77	s	TRANSISTOR 2SA1175-FEK
Q176	8-729-120-28	s	TRANSISTOR 2SC1623-L5L6
Q177	8-729-120-28	s	TRANSISTOR 2SC1623-L5L6
Q178	8-729-905-18	s	TRANSISTOR DTC144EU
Q179	8-729-120-28	s	TRANSISTOR 2SC1623-L5L6
Q180	8-729-120-28	s	TRANSISTOR 2SC1623-L5L6
Q801	8-729-100-66	s	TRANSISTOR 2SC1623
Q802	8-729-201-27	s	TRANSISTOR 2SC2715-Y
Q803	8-729-201-27	s	TRANSISTOR 2SC2715-Y
Q804	8-729-201-27	s	TRANSISTOR 2SC2715-Y
Q805	8-729-100-66	s	TRANSISTOR 2SC1623
Q806	8-729-100-66	s	TRANSISTOR 2SC1623
Q807	8-729-201-27	s	TRANSISTOR 2SC2715-Y
Q808	8-729-100-66	s	TRANSISTOR 2SC1623
Q809	8-729-100-66	s	TRANSISTOR 2SC1623
Q810	8-729-122-63	s	TRANSISTOR 2SA1226
Q811	8-729-201-27	s	TRANSISTOR 2SC2715-Y
Q812	8-729-100-66	s	TRANSISTOR 2SC1623
Q813	8-729-201-27	s	TRANSISTOR 2SC2715-Y
Q814	8-729-100-66	s	TRANSISTOR 2SC1623

(VA-111 BOARD)

Ref. No. or Q'ty	Part No.	SP	Description
Q815	8-729-201-27	s	TRANSISTOR 2SC2715-Y
Q816	8-729-100-66	s	TRANSISTOR 2SC1623
Q817	8-729-216-22	s	TRANSISTOR 2SA1162
Q818	8-729-100-66	s	TRANSISTOR 2SC1623
Q819	8-729-100-66	s	TRANSISTOR 2SC1623
Q820	8-729-905-18	s	TRANSISTOR DTC144EU
Q821	8-729-905-18	s	TRANSISTOR DTC144EU
R101	1-216-833-11	s	METAL, CHIP 10K 5% 1/16W
R103	1-216-833-11	s	METAL, CHIP 10K 5% 1/16W
R104	1-216-817-11	s	METAL, CHIP 470 5% 1/16W
R105	1-216-816-11	s	METAL, CHIP 390 5% 1/16W
R107	1-216-821-11	s	METAL, CHIP 1K 5% 1/16W
R108	1-216-821-11	s	METAL, CHIP 1K 5% 1/16W
R109	1-216-833-11	s	METAL, CHIP 10K 5% 1/16W
R110	1-216-833-11	s	METAL, CHIP 10K 5% 1/16W
R111	1-216-830-11	s	METAL, CHIP 5.6K 5% 1/16W
R112	1-216-825-11	s	METAL, CHIP 2.2K 5% 1/16W
R113	1-216-802-11	s	METAL, CHIP 27 5% 1/16W
R114	1-218-680-11	s	METAL, CHIP 330 0.50% 1/16W
R115	1-216-834-11	s	METAL, CHIP 12K 5% 1/16W
R116	1-216-832-11	s	METAL, CHIP 8.2K 5% 1/16W
R117	1-216-817-11	s	METAL, CHIP 470 5% 1/16W
R118	1-216-817-11	s	METAL, CHIP 470 5% 1/16W
R119	1-216-825-11	s	METAL, CHIP 2.2K 5% 1/16W
R120	1-218-680-11	s	METAL, CHIP 330 0.50% 1/16W
R121	1-216-841-11	s	METAL, CHIP 47K 5% 1/16W
R122	1-216-825-11	s	METAL, CHIP 2.2K 5% 1/16W
R123	1-216-837-11	s	METAL, CHIP 22K 5% 1/16W
R124	1-218-828-11	s	METAL, CHIP 160 0.50% 1/16W
R125	1-216-822-11	s	METAL, CHIP 1.2K 5% 1/16W
R126	1-218-736-11	s	METAL, CHIP 68K 0.50% 1/16W
R127	1-216-817-11	s	METAL, CHIP 470 5% 1/16W
R128	1-216-826-11	s	METAL, CHIP 2.7K 5% 1/16W
R129	1-216-825-11	s	METAL, CHIP 2.2K 5% 1/16W
R130	1-218-271-11	s	METAL, CHIP 2K 5% 1/16W
R131	1-216-822-11	s	METAL, CHIP 1.2K 5% 1/16W
R132	1-216-821-11	s	METAL, CHIP 1K 5% 1/16W
R133	1-218-698-11	s	METAL, CHIP 1.8K 0.50% 1/16W
R134	1-216-833-11	s	METAL, CHIP 10K 5% 1/16W
R135	1-216-827-11	s	METAL, CHIP 3.3K 5% 1/16W
R136	1-216-833-11	s	METAL, CHIP 10K 5% 1/16W
R137	1-216-817-11	s	METAL, CHIP 470 5% 1/16W
R138	1-216-821-11	s	METAL, CHIP 1K 5% 1/16W
R139	1-218-720-11	s	METAL, CHIP 15K 0.50% 1/16W
R140	1-216-822-11	s	METAL, CHIP 1.2K 5% 1/16W
R141	1-218-295-11	s	METAL, CHIP 4.3K 5% 1/16W
R142	1-216-821-11	s	METAL, CHIP 1K 5% 1/16W
R143	1-216-821-11	s	METAL, CHIP 1K 5% 1/16W
R144	1-216-833-11	s	METAL, CHIP 10K 5% 1/16W
R145	1-216-833-11	s	METAL, CHIP 10K 5% 1/16W
R146	1-216-830-11	s	METAL, CHIP 5.6K 5% 1/16W
R147	1-216-825-11	s	METAL, CHIP 2.2K 5% 1/16W
R148	1-216-833-11	s	METAL, CHIP 10K 5% 1/16W
R149	1-216-833-11	s	METAL, CHIP 10K 5% 1/16W
R150	1-216-837-11	s	METAL, CHIP 22K 5% 1/16W
R151	1-216-837-11	s	METAL, CHIP 22K 5% 1/16W
R152	1-216-833-11	s	METAL, CHIP 10K 5% 1/16W
R153	1-216-809-11	s	METAL, CHIP 100 5% 1/16W

(VA-111 BOARD)

Ref. No. or Q'ty	Part No.	SP	Description
R155	1-218-285-11	s	METAL, CHIP 75 5% 1/16W
R156	1-216-809-11	s	METAL, CHIP 100 5% 1/16W
R158	1-216-834-11	s	METAL, CHIP 12K 5% 1/16W
R159	1-216-832-11	s	METAL, CHIP 8.2K 5% 1/16W
R160	1-216-821-11	s	METAL, CHIP 1K 5% 1/16W
R161	1-216-821-11	s	METAL, CHIP 1K 5% 1/16W
R162	1-218-482-11	s	METAL, CHIP 430 5% 1/16W
R164	1-216-809-11	s	METAL, CHIP 100 5% 1/16W
R167	1-216-821-11	s	METAL, CHIP 1K 5% 1/16W
R168	1-216-809-11	s	METAL, CHIP 100 5% 1/16W
R169	1-216-826-11	s	METAL, CHIP 2.7K 5% 1/16W
R170	1-216-822-11	s	METAL, CHIP 1.2K 5% 1/16W
R171	1-216-817-11	s	METAL, CHIP 470 5% 1/16W
R172	1-216-865-11	s	METAL, CHIP 3K 5% 1/16W
R173	1-216-815-11	s	METAL, CHIP 330 5% 1/16W
R174	1-218-688-11	s	METAL, CHIP 680 0.50% 1/16W
R175	1-216-821-11	s	METAL, CHIP 1K 5% 1/16W
R176	1-216-833-11	s	METAL, CHIP 10K 5% 1/16W
R177	1-216-830-11	s	METAL, CHIP 5.6K 5% 1/16W
R178	1-216-827-11	s	METAL, CHIP 3.3K 5% 1/16W
R179	1-216-833-11	s	METAL, CHIP 10K 5% 1/16W
R180	1-216-837-11	s	METAL, CHIP 22K 5% 1/16W
R181	1-216-837-11	s	METAL, CHIP 22K 5% 1/16W
R182	1-216-833-11	s	METAL, CHIP 10K 5% 1/16W
R183	1-216-809-11	s	METAL, CHIP 100 5% 1/16W
R185	1-218-285-11	s	METAL, CHIP 75 5% 1/16W
R186	1-216-837-11	s	METAL, CHIP 22K 5% 1/16W
R187	1-216-837-11	s	METAL, CHIP 22K 5% 1/16W
R188	1-216-833-11	s	METAL, CHIP 10K 5% 1/16W
R189	1-216-833-11	s	METAL, CHIP 10K 5% 1/16W
R190	1-216-809-11	s	METAL, CHIP 100 5% 1/16W
R192	1-218-285-11	s	METAL, CHIP 75 5% 1/16W
R193	1-216-835-11	s	METAL, CHIP 15K 5% 1/16W
R194	1-216-835-11	s	METAL, CHIP 15K 5% 1/16W
R195	1-216-825-11	s	METAL, CHIP 2.2K 5% 1/16W
R196	1-216-826-11	s	METAL, CHIP 2.7K 5% 1/16W
R197	1-216-864-11	s	METAL, CHIP 0 5% 1/16W
R198	1-216-820-11	s	METAL, CHIP 820 5% 1/16W
R199	1-216-833-11	s	METAL, CHIP 10K 5% 1/16W
R200	1-216-827-11	s	METAL, CHIP 3.3K 5% 1/16W
R201	1-216-821-11	s	METAL, CHIP 1K 5% 1/16W
R202	1-216-821-11	s	METAL, CHIP 1K 5% 1/16W
R203	1-216-821-11	s	METAL, CHIP 1K 5% 1/16W
R204	1-216-817-11	s	METAL, CHIP 470 5% 1/16W
R205	1-216-805-11	s	METAL, CHIP 47 5% 1/16W
R206	1-216-821-11	s	METAL, CHIP 1K 5% 1/16W
R207	1-216-821-11	s	METAL, CHIP 1K 5% 1/16W
R208	1-216-827-11	s	METAL, CHIP 3.3K 5% 1/16W
R209	1-216-837-11	s	METAL, CHIP 22K 5% 1/16W
R210	1-216-837-11	s	METAL, CHIP 22K 5% 1/16W
R211	1-216-825-11	s	METAL, CHIP 2.2K 5% 1/16W
R212	1-216-821-11	s	METAL, CHIP 1K 5% 1/16W
R213	1-218-708-11	s	METAL, CHIP 4.7K 0.50% 1/16W
R214	1-216-821-11	s	METAL, CHIP 1K 5% 1/16W
R215	1-216-834-11	s	METAL, CHIP 12K 5% 1/16W
R216	1-216-833-11	s	METAL, CHIP 10K 5% 1/16W
R217	1-216-817-11	s	METAL, CHIP 470 5% 1/16W
R218	1-216-817-11	s	METAL, CHIP 470 5% 1/16W
R219	1-216-840-11	s	METAL, CHIP 39K 5% 1/16W

(VA-111 BOARD)

Ref. No. or Q'ty	Part No.	SP	Description
R220	1-216-817-11	s	METAL, CHIP 470 5% 1/16W
R225	1-216-821-11	s	METAL, CHIP 1K 5% 1/16W
R226	1-216-821-11	s	METAL, CHIP 1K 5% 1/16W
R227	1-216-821-11	s	METAL, CHIP 1K 5% 1/16W
R228	1-216-801-11	s	METAL, CHIP 22 5% 1/16W
R229	1-216-833-11	s	METAL, CHIP 10K 5% 1/16W
R230	1-216-830-11	s	METAL, CHIP 5.6K 5% 1/16W
R231	1-216-821-11	s	METAL, CHIP 1K 5% 1/16W
R232	1-216-821-11	s	METAL, CHIP 1K 5% 1/16W
R233	1-216-827-11	s	METAL, CHIP 3.3K 5% 1/16W
R234	1-216-825-11	s	METAL, CHIP 2.2K 5% 1/16W
R235	1-216-835-11	s	METAL, CHIP 15K 5% 1/16W
R236	1-216-840-11	s	METAL, CHIP 39K 5% 1/16W
R237	1-216-823-11	s	METAL, CHIP 1.5K 5% 1/16W
R238	1-216-805-11	s	METAL, CHIP 47 5% 1/16W
R239	1-216-837-11	s	METAL, CHIP 22K 5% 1/16W
R240	1-216-827-11	s	METAL, CHIP 3.3K 5% 1/16W
R241	1-216-805-11	s	METAL, CHIP 47 5% 1/16W
R242	1-216-805-11	s	METAL, CHIP 47 5% 1/16W
R243	1-216-805-11	s	METAL, CHIP 47 5% 1/16W
R244	1-216-837-11	s	METAL, CHIP 22K 5% 1/16W
R245	1-216-838-11	s	METAL, CHIP 27K 5% 1/16W
R246	1-218-289-11	s	METAL, CHIP 510 5% 1/16W
R247	1-216-820-11	s	METAL, CHIP 820 5% 1/16W
R248	1-216-821-11	s	METAL, CHIP 1K 5% 1/16W
R249	1-216-809-11	s	METAL, CHIP 100 5% 1/16W
R250	1-216-825-11	s	METAL, CHIP 2.2K 5% 1/16W
R251	1-218-289-11	s	METAL, CHIP 510 5% 1/16W
R252	1-216-837-11	s	METAL, CHIP 22K 5% 1/16W
R253	1-216-837-11	s	METAL, CHIP 22K 5% 1/16W
R254	1-216-827-11	s	METAL, CHIP 3.3K 5% 1/16W
R255	1-216-822-11	s	METAL, CHIP 1.2K 5% 1/16W
R256	1-216-817-11	s	METAL, CHIP 470 5% 1/16W
R257	1-216-821-11	s	METAL, CHIP 1K 5% 1/16W
R258	1-216-825-11	s	METAL, CHIP 2.2K 5% 1/16W
R259	1-216-826-11	s	METAL, CHIP 2.7K 5% 1/16W
R260	1-218-288-11	s	METAL, CHIP 300 5% 1/16W
R261	1-216-833-11	s	METAL, CHIP 10K 5% 1/16W
R262	1-216-821-11	s	METAL, CHIP 1K 5% 1/16W
R263	1-216-817-11	s	METAL, CHIP 470 5% 1/16W
R264	1-216-821-11	s	METAL, CHIP 1K 5% 1/16W
R265	1-216-833-11	s	METAL, CHIP 10K 5% 1/16W
R266	1-216-833-11	s	METAL, CHIP 10K 5% 1/16W
R267	1-216-830-11	s	METAL, CHIP 5.6K 5% 1/16W
R268	1-216-821-11	s	METAL, CHIP 1K 5% 1/16W
R269	1-216-833-11	s	METAL, CHIP 10K 5% 1/16W
R270	1-216-817-11	s	METAL, CHIP 470 5% 1/16W
R271	1-216-823-11	s	METAL, CHIP 1.5K 5% 1/16W
R272	1-216-821-11	s	METAL, CHIP 1K 5% 1/16W
R273	1-216-821-11	s	METAL, CHIP 1K 5% 1/16W
R274	1-216-833-11	s	METAL, CHIP 10K 5% 1/16W
R275	1-216-833-11	s	METAL, CHIP 10K 5% 1/16W
R276	1-216-830-11	s	METAL, CHIP 5.6K 5% 1/16W
R277	1-216-825-11	s	METAL, CHIP 2.2K 5% 1/16W
R278	1-216-837-11	s	METAL, CHIP 22K 5% 1/16W
R279	1-216-837-11	s	METAL, CHIP 22K 5% 1/16W
R280	1-216-833-11	s	METAL, CHIP 10K 5% 1/16W
R281	1-216-833-11	s	METAL, CHIP 10K 5% 1/16W
R282	1-216-833-11	s	METAL, CHIP 10K 5% 1/16W

(VA-111 BOARD)

Ref. No. or Q'ty	Part No.	SP	Description
R283	1-216-833-11	s	METAL, CHIP 10K 5% 1/16W
R284	1-216-809-11	s	METAL, CHIP 100 5% 1/16W
R286	1-218-285-11	s	METAL, CHIP 75 5% 1/16W
R287	1-216-837-11	s	METAL, CHIP 22K 5% 1/16W
R288	1-216-837-11	s	METAL, CHIP 22K 5% 1/16W
R289	1-216-825-11	s	METAL, CHIP 2.2K 5% 1/16W
R292	1-218-700-11	s	METAL, CHIP 2.2K 0.50% 1/16W
R293	1-216-829-11	s	METAL, CHIP 4.7K 5% 1/16W
R294	1-216-829-11	s	METAL, CHIP 4.7K 5% 1/16W
R295	1-216-857-11	s	METAL, CHIP 1M 5% 1/16W
R296	1-216-821-11	s	METAL, CHIP 1K 5% 1/16W
R297	1-216-825-11	s	METAL, CHIP 2.2K 5% 1/16W
R298	1-220-373-11	s	METAL, CHIP 62K 0.50% 1/16W
R299	1-216-828-11	s	METAL, CHIP 3.9K 5% 1/16W
R300	1-216-810-11	s	METAL, CHIP 120 5% 1/16W
R301	1-216-810-11	s	METAL, CHIP 120 5% 1/16W
R302	1-216-821-11	s	METAL, CHIP 1K 5% 1/16W
R303	1-216-821-11	s	METAL, CHIP 1K 5% 1/16W
R304	1-216-828-11	s	METAL, CHIP 3.9K 5% 1/16W
R305	1-216-821-11	s	METAL, CHIP 1K 5% 1/16W
R306	1-216-829-11	s	METAL, CHIP 4.7K 5% 1/16W
R307	1-216-840-11	s	METAL, CHIP 39K 5% 1/16W
R308	1-216-833-11	s	METAL, CHIP 10K 5% 1/16W
R309	1-216-841-11	s	METAL, CHIP 47K 5% 1/16W
R310	1-216-833-11	s	METAL, CHIP 10K 5% 1/16W
R311	1-216-821-11	s	METAL, CHIP 1K 5% 1/16W
R312	1-216-827-11	s	METAL, CHIP 3.3K 5% 1/16W
R313	1-216-829-11	s	METAL, CHIP 4.7K 5% 1/16W
R314	1-216-837-11	s	METAL, CHIP 22K 5% 1/16W
R315	1-216-837-11	s	METAL, CHIP 22K 5% 1/16W
R316	1-216-825-11	s	METAL, CHIP 2.2K 5% 1/16W
R317	1-216-833-11	s	METAL, CHIP 10K 5% 1/16W
R318	1-216-817-11	s	METAL, CHIP 470 5% 1/16W
R319	1-216-821-11	s	METAL, CHIP 1K 5% 1/16W
R320	1-216-821-11	s	METAL, CHIP 1K 5% 1/16W
R321	1-216-833-11	s	METAL, CHIP 10K 5% 1/16W
R322	1-216-833-11	s	METAL, CHIP 10K 5% 1/16W
R323	1-216-830-11	s	METAL, CHIP 5.6K 5% 1/16W
R324	1-216-826-11	s	METAL, CHIP 2.7K 5% 1/16W
R325	1-216-837-11	s	METAL, CHIP 22K 5% 1/16W
R326	1-216-837-11	s	METAL, CHIP 22K 5% 1/16W
R327	1-216-833-11	s	METAL, CHIP 10K 5% 1/16W
R328	1-216-833-11	s	METAL, CHIP 10K 5% 1/16W
R329	1-216-809-11	s	METAL, CHIP 100 5% 1/16W
R331	1-218-285-11	s	METAL, CHIP 75 5% 1/16W
R332	1-218-285-11	s	METAL, CHIP 75 5% 1/16W
R333	1-216-825-11	s	METAL, CHIP 2.2K 5% 1/16W
R334	1-216-827-11	s	METAL, CHIP 3.3K 5% 1/16W
R335	1-216-847-11	s	METAL, CHIP 150K 5% 1/16W
R336	1-216-834-11	s	METAL, CHIP 12K 5% 1/16W
R337	1-216-853-11	s	METAL, CHIP 470K 5% 1/16W
R338	1-216-825-11	s	METAL, CHIP 2.2K 5% 1/16W
R340	1-216-821-11	s	METAL, CHIP 1K 5% 1/16W
R341	1-216-841-11	s	METAL, CHIP 47K 5% 1/16W
R342	1-216-817-11	s	METAL, CHIP 470 5% 1/16W
R350	1-216-833-11	s	METAL, CHIP 10K 5% 1/16W
R351	1-216-841-11	s	METAL, CHIP 47K 5% 1/16W
R355	1-216-809-11	s	METAL, CHIP 100 5% 1/16W
R356	1-216-825-11	s	METAL, CHIP 2.2K 5% 1/16W

(VA-111 BOARD)

Ref. No. or Q'ty	Part No.	SP	Description
R357	1-216-841-11	s	METAL, CHIP 47K 5% 1/16W
R358	1-216-841-11	s	METAL, CHIP 47K 5% 1/16W
R359	1-214-838-00	s	METAL 82 1% 1/2W
R360	1-216-841-11	s	METAL, CHIP 47K 5% 1/16W
R361	1-216-841-11	s	METAL, CHIP 47K 5% 1/16W
R362	1-216-864-11	s	METAL, CHIP 0 5% 1/16W
R363	1-216-833-11	s	METAL, CHIP 10K 5% 1/16W
R364	1-216-826-11	s	METAL, CHIP 2.7K 5% 1/16W
R365	1-216-833-11	s	METAL, CHIP 10K 5% 1/16W
R366	1-216-838-11	s	METAL, CHIP 27K 5% 1/16W
R367	1-216-841-11	s	METAL, CHIP 47K 5% 1/16W
R368	1-216-825-11	s	METAL, CHIP 2.2K 5% 1/16W
R369	1-216-829-11	s	METAL, CHIP 4.7K 5% 1/16W
R370	1-216-821-11	s	METAL, CHIP 1K 5% 1/16W
R371	1-216-825-11	s	METAL, CHIP 2.2K 5% 1/16W
R372	1-216-833-11	s	METAL, CHIP 10K 5% 1/16W
R373	1-216-833-11	s	METAL, CHIP 10K 5% 1/16W
R374	1-216-838-11	s	METAL, CHIP 27K 5% 1/16W
R375	1-216-837-11	s	METAL, CHIP 22K 5% 1/16W
R376	1-216-817-11	s	METAL, CHIP 470 5% 1/16W
R377	1-216-817-11	s	METAL, CHIP 470 5% 1/16W
R378	1-216-834-11	s	METAL, CHIP 12K 5% 1/16W
R379	1-216-817-11	s	METAL, CHIP 470 5% 1/16W
R380	1-216-825-11	s	METAL, CHIP 2.2K 5% 1/16W
R382	1-216-833-11	s	METAL, CHIP 10K 5% 1/16W
R383	1-216-833-11	s	METAL, CHIP 10K 5% 1/16W
R384	1-216-837-11	s	METAL, CHIP 22K 5% 1/16W
R385	1-216-825-11	s	METAL, CHIP 2.2K 5% 1/16W
R386	1-216-817-11	s	METAL, CHIP 470 5% 1/16W
R387	1-216-817-11	s	METAL, CHIP 470 5% 1/16W
R388	1-216-834-11	s	METAL, CHIP 12K 5% 1/16W
R389	1-216-817-11	s	METAL, CHIP 470 5% 1/16W
R390	1-216-829-11	s	METAL, CHIP 4.7K 5% 1/16W
R801	1-216-833-11	s	METAL, CHIP 10K 5% 1/16W
R802	1-216-825-11	s	METAL, CHIP 2.2K 5% 1/16W
R803	1-216-821-11	s	METAL, CHIP 1K 5% 1/16W
R804	1-216-805-11	s	METAL, CHIP 47 5% 1/16W
R805	1-216-822-11	s	METAL, CHIP 1.2K 5% 1/16W
R806	1-218-484-11	s	METAL, CHIP 750 5% 1/16W
R807	1-216-825-11	s	METAL, CHIP 2.2K 5% 1/16W
R808	1-216-823-11	s	METAL, CHIP 1.5K 5% 1/16W
R809	1-216-823-11	s	METAL, CHIP 1.5K 5% 1/16W
R810	1-218-700-11	s	METAL, CHIP 2.2K 0.50% 1/16W
R811	1-218-700-11	s	METAL, CHIP 2.2K 0.50% 1/16W
R812	1-216-795-11	s	METAL, CHIP 6.8K 0.50% 1/16W
R813	1-216-825-11	s	METAL, CHIP 2.2K 5% 1/16W
R814	1-216-853-11	s	METAL, CHIP 470K 5% 1/16W
R815	1-216-821-11	s	METAL, CHIP 1K 5% 1/16W
R816	1-216-821-11	s	METAL, CHIP 1K 5% 1/16W
R817	1-216-836-11	s	METAL, CHIP 18K 5% 1/16W
R818	1-216-833-11	s	METAL, CHIP 10K 5% 1/16W
R819	1-216-809-11	s	METAL, CHIP 100 5% 1/16W
R820	1-216-864-11	s	METAL, CHIP 0 5% 1/16W
R821	1-216-842-11	s	METAL, CHIP 56K 5% 1/16W
R822	1-216-837-11	s	METAL, CHIP 22K 5% 1/16W
R823	1-216-818-11	s	METAL, CHIP 560 5% 1/16W
R824	1-216-809-11	s	METAL, CHIP 100 5% 1/16W
R825	1-216-809-11	s	METAL, CHIP 100 5% 1/16W
R826	1-216-809-11	s	METAL, CHIP 100 5% 1/16W

(VA-111 BOARD)

Ref. No. or Q'ty	Part No.	SP	Description
R827	1-218-285-11	s	METAL, CHIP 75 5% 1/16W
R828	1-216-808-11	s	METAL, CHIP 82 5% 1/16W
R829	1-216-809-11	s	METAL, CHIP 100 5% 1/16W
R830	1-216-833-11	s	METAL, CHIP 10K 5% 1/16W
R831	1-216-815-11	s	METAL, CHIP 330 5% 1/16W
R832	1-216-815-11	s	METAL, CHIP 330 5% 1/16W
R833	1-216-821-11	s	METAL, CHIP 1K 5% 1/16W
R834	1-216-819-11	s	METAL, CHIP 680 5% 1/16W
R835	1-218-697-11	s	METAL, CHIP 1.6K 0.50% 1/16W
R836	1-216-826-11	s	METAL, CHIP 2.7K 5% 1/16W
R837	1-216-825-11	s	METAL, CHIP 2.2K 5% 1/16W
R838	1-216-834-11	s	METAL, CHIP 12K 5% 1/16W
R839	1-216-830-11	s	METAL, CHIP 5.6K 5% 1/16W
R840	1-216-815-11	s	METAL, CHIP 330 5% 1/16W
R841	1-216-809-11	s	METAL, CHIP 100 5% 1/16W
R842	1-216-825-11	s	METAL, CHIP 2.2K 5% 1/16W
R843	1-216-805-11	s	METAL, CHIP 47 5% 1/16W
R844	1-218-714-11	s	METAL, CHIP 8.2K 0.50% 1/16W
R845	1-218-704-11	s	METAL, CHIP 3.3K 0.50% 1/16W
R846	1-216-813-11	s	METAL, CHIP 220 5% 1/16W
R847	1-216-813-11	s	METAL, CHIP 220 5% 1/16W
R848	1-216-864-11	s	METAL, CHIP 0 5% 1/16W
R849	1-216-821-11	s	METAL, CHIP 1K 5% 1/16W
R850	1-216-821-11	s	METAL, CHIP 1K 5% 1/16W
R851	1-216-813-11	s	METAL, CHIP 220 5% 1/16W
R852	1-216-816-11	s	METAL, CHIP 390 5% 1/16W
R853	1-216-817-11	s	METAL, CHIP 470 5% 1/16W
R854	1-216-809-11	s	METAL, CHIP 100 5% 1/16W
R855	1-216-855-11	s	METAL, CHIP 680K 5% 1/16W
R856	1-216-825-11	s	METAL, CHIP 2.2K 5% 1/16W
R858	1-218-482-11	s	METAL, CHIP 430 5% 1/16W
R860	1-216-809-11	s	METAL, CHIP 100 5% 1/16W
R861	1-216-833-11	s	METAL, CHIP 10K 5% 1/16W
R862	1-216-821-11	s	METAL, CHIP 1K 5% 1/16W
R863	1-216-815-11	s	METAL, CHIP 330 5% 1/16W
R864	1-216-821-11	s	METAL, CHIP 1K 5% 1/16W
R865	1-216-821-11	s	METAL, CHIP 1K 5% 1/16W
R866	1-216-821-11	s	METAL, CHIP 1K 5% 1/16W
R867	1-216-833-11	s	METAL, CHIP 10K 5% 1/16W
R868	1-216-825-11	s	METAL, CHIP 2.2K 5% 1/16W
R869	1-216-835-11	s	METAL, CHIP 15K 5% 1/16W
R870	1-216-833-11	s	METAL, CHIP 10K 5% 1/16W
R871	1-216-815-11	s	METAL, CHIP 330 5% 1/16W
R872	1-216-821-11	s	METAL, CHIP 1K 5% 1/16W
R873	1-216-821-11	s	METAL, CHIP 1K 5% 1/16W
R874	1-216-817-11	s	METAL, CHIP 470 5% 1/16W
R875	1-216-809-11	s	METAL, CHIP 100 5% 1/16W
R876	1-216-821-11	s	METAL, CHIP 1K 5% 1/16W
R877	1-216-805-11	s	METAL, CHIP 47 5% 1/16W
R878	1-216-795-11	s	METAL, CHIP 6.8K 0.50% 1/16W
R879	1-218-708-11	s	METAL, CHIP 4.7K 0.50% 1/16W
R880	1-218-708-11	s	METAL, CHIP 4.7K 0.50% 1/16W
R881	1-216-825-11	s	METAL, CHIP 2.2K 5% 1/16W
R882	1-216-821-11	s	METAL, CHIP 1K 5% 1/16W
R883	1-216-821-11	s	METAL, CHIP 1K 5% 1/16W
R884	1-218-677-11	s	METAL, CHIP 240 0.50% 1/16W
R885	1-218-345-11	s	METAL, CHIP 9.1K 5% 1/16W
R886	1-218-457-11	s	METAL, CHIP 910 5% 1/16W
R887	1-216-820-11	s	METAL, CHIP 820 5% 1/16W

(VA-111 BOARD)

Ref. No. or Q'ty	Part No.	SP	Description
R888	1-216-813-11	s	METAL, CHIP 220 5% 1/16W
R889	1-216-837-11	s	METAL, CHIP 22K 5% 1/16W
R890	1-216-813-11	s	METAL, CHIP 220 5% 1/16W
R891	1-218-708-11	s	METAL, CHIP 4.7K 0.50% 1/16W
R892	1-216-816-11	s	METAL, CHIP 390 5% 1/16W
R893	1-218-661-11	s	METAL, CHIP 51 0.50% 1/16W
R894	1-218-661-11	s	METAL, CHIP 51 0.50% 1/16W
R895	1-216-821-11	s	METAL, CHIP 1K 5% 1/16W
R896	1-216-821-11	s	METAL, CHIP 1K 5% 1/16W
R897	1-216-821-11	s	METAL, CHIP 1K 5% 1/16W
R898	1-216-821-11	s	METAL, CHIP 1K 5% 1/16W
R899	1-216-821-11	s	METAL, CHIP 1K 5% 1/16W
R900	1-216-813-11	s	METAL, CHIP 220 5% 1/16W
R901	1-216-821-11	s	METAL, CHIP 1K 5% 1/16W
R902	1-216-833-11	s	METAL, CHIP 10K 5% 1/16W
R903	1-216-834-11	s	METAL, CHIP 12K 5% 1/16W
R904	1-216-833-11	s	METAL, CHIP 10K 5% 1/16W
RV101	1-238-799-11	s	RES, ADJ METAL 1K
RV102	1-238-799-11	s	RES, ADJ METAL 1K
RV103	1-238-799-11	s	RES, ADJ METAL 1K
RV104	1-238-800-11	s	RES, ADJ METAL 2K
RV105	1-238-799-11	s	RES, ADJ METAL 1K
RV106	1-238-799-11	s	RES, ADJ METAL 1K
RV107	1-238-798-11	s	RES, ADJ METAL 500
RV108	1-238-799-11	s	RES, ADJ METAL 1K
RV109	1-238-799-11	s	RES, ADJ METAL 1K
RV110	1-238-801-11	s	RES, ADJ METAL 5K
RV111	1-238-799-11	s	RES, ADJ METAL 1K
RV802	1-238-802-11	s	RES, ADJ METAL 10K
RV803	1-238-798-11	s	RES, ADJ METAL 500
RV805	1-238-802-11	s	RES, ADJ METAL 10K
RV806	1-238-798-11	s	RES, ADJ METAL 500
RV807	1-238-797-11	s	RES, ADJ METAL 200
RV808	1-238-797-11	s	RES, ADJ METAL 200
S101	1-570-622-11	s	SWITCH, DIP 7-CKT
S102	1-570-622-11	s	SWITCH, DIP 7-CKT
X101	1-527-377-00	s	CRYSTAL 4.267919MHz

VR-122 BOARD

Ref. No. or Q'ty	Part No.	SP	Description
1pc	1-642-873-11	o	PRINTED CIRCUIT BOARD, VR-122
CN245	1-506-477-11	s	CONNECTOR 12P, MALE
RV1	1-237-790-21	s	RES, VAR CARBON 10K
RV2	1-237-790-21	s	RES, VAR CARBON 10K
RV3	1-237-790-21	s	RES, VAR CARBON 10K
RV4	1-237-790-21	s	RES, VAR CARBON 10K

VR-130 BOARD

Ref. No. or Q'ty	Part No.	SP	Description
1pc	1-642-874-11	o	PRINTED CIRCUIT BOARD, VR-130
C1	1-162-970-11	s	CERAMIC, CHIP 0.01uF 10% 25V
CN242	1-506-482-11	s	CONNECTOR 3P, MALE
R1	1-216-033-00	s	METAL, CHIP 220 5% 1/10W
R2	1-216-033-00	s	METAL, CHIP 220 5% 1/10W
R3	1-216-033-00	s	METAL, CHIP 220 5% 1/10W
R4	1-216-033-00	s	METAL, CHIP 220 5% 1/10W
R5	1-216-033-00	s	METAL, CHIP 220 5% 1/10W
R6	1-216-033-00	s	METAL, CHIP 220 5% 1/10W
R7	1-216-033-00	s	METAL, CHIP 220 5% 1/10W
R8	1-216-033-00	s	METAL, CHIP 220 5% 1/10W
RV1	1-237-703-11	s	RES, VAR CARBON 2Kx2

(VA-111 BOARD)

Ref. No. or Q'ty	Part No.	SP	Description
C822	1-124-477-11	s	ELECT 47uF 20% 25V
C823	1-162-927-11	s	CERAMIC, CHIP 100PF 5% 50V
C824	1-162-927-11	s	CERAMIC, CHIP 100PF 5% 50V
C825	1-164-227-11	s	CERAMIC, CHIP 0.022uF 10% 25V
C826	1-164-160-11	s	CERAMIC, CHIP 20PF 5% 50V
C827	1-164-218-11	s	CERAMIC, CHIP 180PF 50V
C828	1-124-126-00	s	ELECT 47uF 20% 25V
C829	1-124-126-00	s	ELECT 47uF 20% 25V
C830	1-164-227-11	s	CERAMIC, CHIP 0.022uF 10% 25V
C831	1-164-227-11	s	CERAMIC, CHIP 0.022uF 10% 25V
C832	1-164-227-11	s	CERAMIC, CHIP 0.022uF 10% 25V
C833	1-164-227-11	s	CERAMIC, CHIP 0.022uF 10% 25V
C834	1-162-915-11	s	CERAMIC, CHIP 10PF 50V
C835	1-164-227-11	s	CERAMIC, CHIP 0.022uF 10% 25V
C836	1-164-227-11	s	CERAMIC, CHIP 0.022uF 10% 25V
C837	1-162-927-11	s	CERAMIC, CHIP 100PF 5% 50V
C838	1-164-227-11	s	CERAMIC, CHIP 0.022uF 10% 25V
C839	1-124-443-00	s	ELECT 100uF 20% 10V
C840	1-124-443-00	s	ELECT 100uF 20% 10V
C841	1-162-924-11	s	CERAMIC 56PF 5% 50V
C844	1-124-477-11	s	ELECT 47uF 20% 25V
C845	1-164-227-11	s	CERAMIC, CHIP 0.022uF 10% 25V
C846	1-162-919-11	s	CERAMIC, CHIP 22PF 5% 50V
C847	1-164-227-11	s	CERAMIC, CHIP 0.022uF 10% 25V
C848	1-124-477-11	s	ELECT 47uF 20% 25V
C849	1-164-227-11	s	CERAMIC, CHIP 0.022uF 10% 25V
C850	1-162-921-11	s	CERAMIC, CHIP 33PF 5% 50V
C851	1-163-125-00	s	CERAMIC, CHIP 220PF 5% 50V
C852	1-164-227-11	s	CERAMIC, CHIP 0.022uF 10% 25V
C853	1-164-227-11	s	CERAMIC, CHIP 0.022uF 10% 25V
C854	1-162-924-11	s	CERAMIC 56PF 5% 50V
C855	1-162-924-11	s	CERAMIC 56PF 5% 50V
C856	1-164-227-11	s	CERAMIC, CHIP 0.022uF 10% 25V
C857	1-124-477-11	s	ELECT 47uF 20% 25V
C859	1-124-477-11	s	ELECT 47uF 20% 25V
C860	1-164-227-11	s	CERAMIC, CHIP 0.022uF 10% 25V
C861	1-164-227-11	s	CERAMIC, CHIP 0.022uF 10% 25V
C862	1-162-922-11	s	CERAMIC, CHIP 39PF 5% 50V
C863	1-162-921-11	s	CERAMIC, CHIP 33PF 5% 50V
C864	1-124-477-11	s	ELECT 47uF 20% 25V
C865	1-164-227-11	s	CERAMIC, CHIP 0.022uF 10% 25V
C866	1-162-970-11	s	CERAMIC, CHIP 0.01uF 10% 25V
CN609	1-573-782-21	o	CONNECTOR, PHEC 60P, MALE
CN610	1-573-782-21	o	CONNECTOR, PHEC 60P, MALE
CV101	1-141-322-11	s	CAP, VAR, TRIMMER 20PF
D101	8-719-104-10	s	DIODE 1SS99
D102	8-719-104-10	s	DIODE 1SS99
D103	8-719-104-10	s	DIODE 1SS99
D104	8-719-104-10	s	DIODE 1SS99
D105	8-719-104-10	s	DIODE 1SS99
D106	8-719-104-10	s	DIODE 1SS99
D107	8-719-941-86	s	DIODE DAN202U
D108	8-719-941-86	s	DIODE DAN202U
D109	8-719-941-86	s	DIODE DAN202U
D110	8-719-911-19	s	DIODE 1SS119
D801	8-719-941-86	s	DIODE DAN202U
D802	8-719-800-76	s	DIODE 1SS226

(VA-111 BOARD)

Ref. No. or Q'ty	Part No.	SP	Description
D803	8-719-941-86	s	DIODE DAN202U
DL101	1-415-402-11	s	DELAY LINE 300nS
DL103	1-415-402-11	s	DELAY LINE 300nS
FL101	1-235-474-11	s	FILTER, LOW-PASS
FL102	1-236-040-11	s	FILTER, LOW-PASS
FL103	1-235-474-11	s	FILTER, LOW-PASS
FL104	1-409-410-11	s	FILTER, TRAP 4.4MHz
FL801	1-235-759-11	s	FILTER, LOW-PASS
FL802	1-235-161-00	s	FILTER, BANDPASS 3.58MHz
IC101	8-759-710-86	s	IC NJM2233BM-T1
IC102	8-759-925-60	s	IC BA401
IC103	8-759-925-60	s	IC BA401
IC104	8-752-015-81	s	IC CX20158
IC105	8-759-710-86	s	IC NJM2233BM-T1
IC106	8-759-925-60	s	IC BA401
IC107	8-752-015-81	s	IC CX20158
IC108	8-752-015-81	s	IC CX20158
IC109	8-759-111-69	s	IC UPC1037HA
IC110	8-759-710-86	s	IC NJM2233BM-T1
IC111	8-759-925-60	s	IC BA401
IC112	8-752-015-81	s	IC CX20158
IC113	8-759-009-07	s	IC MC14053BF
IC114	8-752-015-81	s	IC CX20158
IC115	8-759-201-47	s	IC TA7357AP
IC116	8-759-710-86	s	IC NJM2233BM-T1
IC117	8-759-927-46	s	IC SN74HC00NS
IC801	8-759-014-29	s	IC MC34184M
IC802	8-759-908-17	s	IC TL082CPS
IC803	8-759-947-82	s	IC TL610CPS
IC804	8-752-015-81	s	IC CX20158
IC805	8-759-239-55	s	IC TC74HC123AF
IC806	8-759-937-61	s	IC S-81230AG
IC807	8-759-941-79	s	IC S-80230AG
IC808	8-759-925-74	s	IC TC74HC04NS
IC809	8-759-030-55	s	IC MC1496M
L101	1-408-785-21	s	INDUCTOR, CHIP 47UH
L102	1-410-087-31	s	INDUCTOR 10mH
L103	1-408-785-21	s	INDUCTOR, CHIP 47UH
L104	1-408-785-21	s	INDUCTOR, CHIP 47UH
L107	1-408-785-21	s	INDUCTOR, CHIP 47UH
L108	1-410-656-11	s	INDUCTOR, CHIP 150UH
L109	1-408-785-21	s	INDUCTOR, CHIP 47UH
L110	1-408-785-21	s	INDUCTOR, CHIP 47UH
L111	1-408-785-21	s	INDUCTOR, CHIP 47UH
L112	1-408-785-21	s	INDUCTOR, CHIP 47UH
L113	1-410-388-21	s	INDUCTOR, CHIP 39uH
L114	1-410-391-11	s	INDUCTOR, CHIP 68uH
L115	1-410-387-11	s	INDUCTOR, CHIP 33uH
L118	1-408-785-21	s	INDUCTOR, CHIP 47UH
L119	1-408-785-21	s	INDUCTOR, CHIP 47UH
L120	1-410-390-11	s	INDUCTOR, CHIP 56uH
L121	1-410-655-31	s	INDUCTOR, CHIP 120uH
L122	1-410-087-31	s	INDUCTOR 10mH
L123	1-408-785-21	s	INDUCTOR, CHIP 47UH
L124	1-408-785-21	s	INDUCTOR, CHIP 47UH
L125	1-408-785-21	s	INDUCTOR, CHIP 47UH

(VA-111 BOARD)

Ref. No. or Q'ty	Part No.	SP	Description
L126	1-408-785-21	s	INDUCTOR, CHIP 47UH
L127	1-410-393-11	s	INDUCTOR, CHIP 100UH
L128	1-408-785-21	s	INDUCTOR, CHIP 47UH
L129	1-408-785-21	s	INDUCTOR, CHIP 47UH
L130	1-410-392-11	s	INDUCTOR, CHIP 82uH
L131	1-412-282-41	s	INDUCTOR, CHIP 470UH
L132	1-408-785-21	s	INDUCTOR, CHIP 47UH
L133	1-408-785-21	s	INDUCTOR, CHIP 47UH
L134	1-408-785-21	s	INDUCTOR, CHIP 47UH
L135	1-410-381-11	s	INDUCTOR, CHIP 10UH
L136	1-408-785-21	s	INDUCTOR, CHIP 47UH
L140	1-408-785-21	s	INDUCTOR, CHIP 47UH
L141	1-410-381-11	s	INDUCTOR, CHIP 10UH
L142	1-408-785-21	s	INDUCTOR, CHIP 47UH
L506	1-408-785-21	s	INDUCTOR, CHIP 47UH
L801	1-410-381-11	s	INDUCTOR, CHIP 10UH
L802	1-408-785-21	s	INDUCTOR, CHIP 47UH
L803	1-408-785-21	s	INDUCTOR, CHIP 47UH
L804	1-408-785-21	s	INDUCTOR, CHIP 47UH
L805	1-408-785-21	s	INDUCTOR, CHIP 47UH
L806	1-410-380-31	s	INDUCTOR, CHIP 8.2uH
L807	1-408-785-21	s	INDUCTOR, CHIP 47UH
L808	1-410-380-31	s	INDUCTOR, CHIP 8.2uH
L809	1-408-785-21	s	INDUCTOR, CHIP 47UH
L810	1-408-785-21	s	INDUCTOR, CHIP 47UH
L811	1-408-785-21	s	INDUCTOR, CHIP 47UH
L812	1-410-391-11	s	INDUCTOR, CHIP 68uH
L813	1-410-386-11	s	INDUCTOR, CHIP 27uH
L814	1-410-392-11	s	INDUCTOR, CHIP 82uH
L815	1-408-785-21	s	INDUCTOR, CHIP 47UH
L816	1-408-785-21	s	INDUCTOR, CHIP 47UH
L817	1-410-381-11	s	INDUCTOR, CHIP 10UH
L818	1-410-393-11	s	INDUCTOR, CHIP 100UH
Q101	8-729-120-28	s	TRANSISTOR 2SC1623-L5L6
Q102	8-729-120-28	s	TRANSISTOR 2SC1623-L5L6
Q103	8-729-120-28	s	TRANSISTOR 2SC1623-L5L6
Q104	8-729-120-28	s	TRANSISTOR 2SC1623-L5L6
Q105	8-729-120-28	s	TRANSISTOR 2SC1623-L5L6
Q106	8-729-120-28	s	TRANSISTOR 2SC1623-L5L6
Q107	8-729-905-18	s	TRANSISTOR DTC144EU
Q108	8-729-905-18	s	TRANSISTOR DTC144EU
Q109	8-729-905-18	s	TRANSISTOR DTC144EU
Q110	8-729-905-18	s	TRANSISTOR DTC144EU
Q111	8-729-120-28	s	TRANSISTOR 2SC1623-L5L6
Q112	8-729-905-18	s	TRANSISTOR DTC144EU
Q113	8-729-120-28	s	TRANSISTOR 2SC1623-L5L6
Q114	8-729-120-28	s	TRANSISTOR 2SC1623-L5L6
Q115	8-729-120-28	s	TRANSISTOR 2SC1623-L5L6
Q116	8-729-120-28	s	TRANSISTOR 2SC1623-L5L6
Q117	8-729-120-28	s	TRANSISTOR 2SC1623-L5L6
Q118	8-729-120-28	s	TRANSISTOR 2SC1623-L5L6
Q119	8-729-120-28	s	TRANSISTOR 2SC1623-L5L6
Q120	8-729-120-28	s	TRANSISTOR 2SC1623-L5L6
Q121	8-729-120-28	s	TRANSISTOR 2SC1623-L5L6
Q122	8-729-120-28	s	TRANSISTOR 2SC1623-L5L6
Q123	8-729-120-28	s	TRANSISTOR 2SC1623-L5L6
Q124	8-729-120-28	s	TRANSISTOR 2SC1623-L5L6
Q125	8-729-120-28	s	TRANSISTOR 2SC1623-L5L6

(VA-111 BOARD)

Ref. No. or Q'ty	Part No.	SP	Description
Q126	8-729-120-28	s	TRANSISTOR 2SC1623-L5L6
Q127	8-729-120-28	s	TRANSISTOR 2SC1623-L5L6
Q129	8-729-120-28	s	TRANSISTOR 2SC1623-L5L6
Q130	8-729-120-28	s	TRANSISTOR 2SC1623-L5L6
Q131	8-729-120-28	s	TRANSISTOR 2SC1623-L5L6
Q132	8-729-905-23	s	TRANSISTOR 2SA1576-R
Q133	8-729-905-23	s	TRANSISTOR 2SA1576-R
Q134	8-729-905-23	s	TRANSISTOR 2SA1576-R
Q135	8-729-905-23	s	TRANSISTOR 2SA1576-R
Q136	8-729-120-28	s	TRANSISTOR 2SC1623-L5L6
Q137	8-729-120-28	s	TRANSISTOR 2SC1623-L5L6
Q138	8-729-905-23	s	TRANSISTOR 2SA1576-R
Q139	8-729-120-28	s	TRANSISTOR 2SC1623-L5L6
Q140	8-729-905-23	s	TRANSISTOR 2SA1576-R
Q141	8-729-120-28	s	TRANSISTOR 2SC1623-L5L6
Q142	8-729-120-28	s	TRANSISTOR 2SC1623-L5L6
Q143	8-729-120-28	s	TRANSISTOR 2SC1623-L5L6
Q144	8-729-120-28	s	TRANSISTOR 2SC1623-L5L6
Q145	8-729-120-28	s	TRANSISTOR 2SC1623-L5L6
Q146	8-729-120-28	s	TRANSISTOR 2SC1623-L5L6
Q147	8-729-120-28	s	TRANSISTOR 2SC1623-L5L6
Q148	8-729-120-28	s	TRANSISTOR 2SC1623-L5L6
Q149	8-729-120-28	s	TRANSISTOR 2SC1623-L5L6
Q151	8-729-905-23	s	TRANSISTOR 2SA1576-R
Q152	8-729-120-28	s	TRANSISTOR 2SC1623-L5L6
Q153	8-729-120-28	s	TRANSISTOR 2SC1623-L5L6
Q154	8-729-905-23	s	TRANSISTOR 2SA1576-R
Q155	8-729-905-23	s	TRANSISTOR 2SA1576-R
Q156	8-729-120-28	s	TRANSISTOR 2SC1623-L5L6
Q157	8-729-120-28	s	TRANSISTOR 2SC1623-L5L6
Q158	8-729-905-23	s	TRANSISTOR 2SA1576-R
Q159	8-729-120-28	s	TRANSISTOR 2SC1623-L5L6
Q160	8-729-120-28	s	TRANSISTOR 2SC1623-L5L6
Q161	8-729-120-28	s	TRANSISTOR 2SC1623-L5L6
Q162	8-729-120-28	s	TRANSISTOR 2SC1623-L5L6
Q171	8-729-120-28	s	TRANSISTOR 2SC1623-L5L6
Q172	8-729-120-28	s	TRANSISTOR 2SC1623-L5L6
Q173	8-729-905-18	s	TRANSISTOR DTC144EU
Q174	8-729-120-28	s	TRANSISTOR 2SC1623-L5L6
Q175	8-729-119-77	s	TRANSISTOR 2SA1175-FEK
Q176	8-729-120-28	s	TRANSISTOR 2SC1623-L5L6
Q177	8-729-120-28	s	TRANSISTOR 2SC1623-L5L6
Q178	8-729-905-18	s	TRANSISTOR DTC144EU
Q179	8-729-120-28	s	TRANSISTOR 2SC1623-L5L6
Q180	8-729-120-28	s	TRANSISTOR 2SC1623-L5L6
Q801	8-729-100-66	s	TRANSISTOR 2SC1623
Q802	8-729-201-27	s	TRANSISTOR 2SC2715-Y
Q803	8-729-201-27	s	TRANSISTOR 2SC2715-Y
Q804	8-729-201-27	s	TRANSISTOR 2SC2715-Y
Q805	8-729-100-66	s	TRANSISTOR 2SC1623
Q806	8-729-100-66	s	TRANSISTOR 2SC1623
Q807	8-729-201-27	s	TRANSISTOR 2SC2715-Y
Q808	8-729-100-66	s	TRANSISTOR 2SC1623
Q809	8-729-100-66	s	TRANSISTOR 2SC1623
Q810	8-729-122-63	s	TRANSISTOR 2SA1226
Q811	8-729-201-27	s	TRANSISTOR 2SC2715-Y
Q812	8-729-100-66	s	TRANSISTOR 2SC1623
Q813	8-729-201-27	s	TRANSISTOR 2SC2715-Y
Q814	8-729-100-66	s	TRANSISTOR 2SC1623

(VA-111 BOARD)

Ref. No. or Q'ty	Part No.	SP	Description
Q815	8-729-201-27	s	TRANSISTOR 2SC2715-Y
Q816	8-729-100-66	s	TRANSISTOR 2SC1623
Q817	8-729-216-22	s	TRANSISTOR 2SA1162
Q818	8-729-100-66	s	TRANSISTOR 2SC1623
Q819	8-729-100-66	s	TRANSISTOR 2SC1623
Q820	8-729-905-18	s	TRANSISTOR DTC144EU
Q821	8-729-905-18	s	TRANSISTOR DTC144EU
R101	1-216-833-11	s	METAL, CHIP 10K 5% 1/16W
R103	1-216-833-11	s	METAL, CHIP 10K 5% 1/16W
R104	1-216-817-11	s	METAL, CHIP 470 5% 1/16W
R105	1-216-816-11	s	METAL, CHIP 390 5% 1/16W
R107	1-216-821-11	s	METAL, CHIP 1K 5% 1/16W
R108	1-216-821-11	s	METAL, CHIP 1K 5% 1/16W
R109	1-216-833-11	s	METAL, CHIP 10K 5% 1/16W
R110	1-216-833-11	s	METAL, CHIP 10K 5% 1/16W
R111	1-216-830-11	s	METAL, CHIP 5.6K 5% 1/16W
R112	1-216-825-11	s	METAL, CHIP 2.2K 5% 1/16W
R113	1-216-802-11	s	METAL, CHIP 27 5% 1/16W
R114	1-218-680-11	s	METAL, CHIP 330 0.50% 1/16W
R115	1-216-834-11	s	METAL, CHIP 12K 5% 1/16W
R116	1-216-832-11	s	METAL, CHIP 8.2K 5% 1/16W
R117	1-216-817-11	s	METAL, CHIP 470 5% 1/16W
R118	1-216-817-11	s	METAL, CHIP 470 5% 1/16W
R119	1-216-825-11	s	METAL, CHIP 2.2K 5% 1/16W
R120	1-218-680-11	s	METAL, CHIP 330 0.50% 1/16W
R121	1-216-841-11	s	METAL, CHIP 47K 5% 1/16W
R122	1-216-825-11	s	METAL, CHIP 2.2K 5% 1/16W
R123	1-216-837-11	s	METAL, CHIP 22K 5% 1/16W
R124	1-218-828-11	s	METAL, CHIP 160 0.50% 1/16W
R125	1-216-822-11	s	METAL, CHIP 1.2K 5% 1/16W
R126	1-218-736-11	s	METAL, CHIP 68K 0.50% 1/16W
R127	1-216-817-11	s	METAL, CHIP 470 5% 1/16W
R128	1-216-826-11	s	METAL, CHIP 2.7K 5% 1/16W
R129	1-216-825-11	s	METAL, CHIP 2.2K 5% 1/16W
R130	1-218-271-11	s	METAL, CHIP 2K 5% 1/16W
R131	1-216-822-11	s	METAL, CHIP 1.2K 5% 1/16W
R132	1-216-821-11	s	METAL, CHIP 1K 5% 1/16W
R133	1-218-698-11	s	METAL, CHIP 1.8K 0.50% 1/16W
R134	1-216-833-11	s	METAL, CHIP 10K 5% 1/16W
R135	1-216-827-11	s	METAL, CHIP 3.3K 5% 1/16W
R136	1-216-833-11	s	METAL, CHIP 10K 5% 1/16W
R137	1-216-817-11	s	METAL, CHIP 470 5% 1/16W
R138	1-216-821-11	s	METAL, CHIP 1K 5% 1/16W
R139	1-218-720-11	s	METAL, CHIP 15K 0.50% 1/16W
R140	1-216-822-11	s	METAL, CHIP 1.2K 5% 1/16W
R141	1-218-295-11	s	METAL, CHIP 4.3K 5% 1/16W
R142	1-216-821-11	s	METAL, CHIP 1K 5% 1/16W
R143	1-216-821-11	s	METAL, CHIP 1K 5% 1/16W
R144	1-216-833-11	s	METAL, CHIP 10K 5% 1/16W
R145	1-216-833-11	s	METAL, CHIP 10K 5% 1/16W
R146	1-216-830-11	s	METAL, CHIP 5.6K 5% 1/16W
R147	1-216-825-11	s	METAL, CHIP 2.2K 5% 1/16W
R148	1-216-833-11	s	METAL, CHIP 10K 5% 1/16W
R149	1-216-833-11	s	METAL, CHIP 10K 5% 1/16W
R150	1-216-837-11	s	METAL, CHIP 22K 5% 1/16W
R151	1-216-837-11	s	METAL, CHIP 22K 5% 1/16W
R152	1-216-833-11	s	METAL, CHIP 10K 5% 1/16W
R153	1-216-809-11	s	METAL, CHIP 100 5% 1/16W

(VA-111 BOARD)

Ref. No. or Q'ty	Part No.	SP	Description
R155	1-218-285-11	s	METAL, CHIP 75 5% 1/16W
R156	1-216-809-11	s	METAL, CHIP 100 5% 1/16W
R158	1-216-834-11	s	METAL, CHIP 12K 5% 1/16W
R159	1-216-832-11	s	METAL, CHIP 8.2K 5% 1/16W
R160	1-216-821-11	s	METAL, CHIP 1K 5% 1/16W
R161	1-216-821-11	s	METAL, CHIP 1K 5% 1/16W
R162	1-218-482-11	s	METAL, CHIP 430 5% 1/16W
R164	1-216-809-11	s	METAL, CHIP 100 5% 1/16W
R167	1-216-821-11	s	METAL, CHIP 1K 5% 1/16W
R168	1-216-809-11	s	METAL, CHIP 100 5% 1/16W
R169	1-216-826-11	s	METAL, CHIP 2.7K 5% 1/16W
R170	1-216-822-11	s	METAL, CHIP 1.2K 5% 1/16W
R171	1-216-817-11	s	METAL, CHIP 470 5% 1/16W
R172	1-216-865-11	s	METAL, CHIP 3K 5% 1/16W
R173	1-216-815-11	s	METAL, CHIP 330 5% 1/16W
R174	1-218-688-11	s	METAL, CHIP 680 0.50% 1/16W
R175	1-216-821-11	s	METAL, CHIP 1K 5% 1/16W
R176	1-216-833-11	s	METAL, CHIP 10K 5% 1/16W
R177	1-216-830-11	s	METAL, CHIP 5.6K 5% 1/16W
R178	1-216-827-11	s	METAL, CHIP 3.3K 5% 1/16W
R179	1-216-833-11	s	METAL, CHIP 10K 5% 1/16W
R180	1-216-837-11	s	METAL, CHIP 22K 5% 1/16W
R181	1-216-837-11	s	METAL, CHIP 22K 5% 1/16W
R182	1-216-833-11	s	METAL, CHIP 10K 5% 1/16W
R183	1-216-809-11	s	METAL, CHIP 100 5% 1/16W
R185	1-218-285-11	s	METAL, CHIP 75 5% 1/16W
R186	1-216-837-11	s	METAL, CHIP 22K 5% 1/16W
R187	1-216-837-11	s	METAL, CHIP 22K 5% 1/16W
R188	1-216-833-11	s	METAL, CHIP 10K 5% 1/16W
R189	1-216-833-11	s	METAL, CHIP 10K 5% 1/16W
R190	1-216-809-11	s	METAL, CHIP 100 5% 1/16W
R192	1-218-285-11	s	METAL, CHIP 75 5% 1/16W
R193	1-216-835-11	s	METAL, CHIP 15K 5% 1/16W
R194	1-216-835-11	s	METAL, CHIP 15K 5% 1/16W
R195	1-216-825-11	s	METAL, CHIP 2.2K 5% 1/16W
R196	1-216-826-11	s	METAL, CHIP 2.7K 5% 1/16W
R197	1-216-864-11	s	METAL, CHIP 0 5% 1/16W
R198	1-216-820-11	s	METAL, CHIP 820 5% 1/16W
R199	1-216-833-11	s	METAL, CHIP 10K 5% 1/16W
R200	1-216-827-11	s	METAL, CHIP 3.3K 5% 1/16W
R201	1-216-821-11	s	METAL, CHIP 1K 5% 1/16W
R202	1-216-821-11	s	METAL, CHIP 1K 5% 1/16W
R203	1-216-821-11	s	METAL, CHIP 1K 5% 1/16W
R204	1-216-817-11	s	METAL, CHIP 470 5% 1/16W
R205	1-216-805-11	s	METAL, CHIP 47 5% 1/16W
R206	1-216-821-11	s	METAL, CHIP 1K 5% 1/16W
R207	1-216-821-11	s	METAL, CHIP 1K 5% 1/16W
R208	1-216-827-11	s	METAL, CHIP 3.3K 5% 1/16W
R209	1-216-837-11	s	METAL, CHIP 22K 5% 1/16W
R210	1-216-837-11	s	METAL, CHIP 22K 5% 1/16W
R211	1-216-825-11	s	METAL, CHIP 2.2K 5% 1/16W
R212	1-216-821-11	s	METAL, CHIP 1K 5% 1/16W
R213	1-218-708-11	s	METAL, CHIP 4.7K 0.50% 1/16W
R214	1-216-821-11	s	METAL, CHIP 1K 5% 1/16W
R215	1-216-834-11	s	METAL, CHIP 12K 5% 1/16W
R216	1-216-833-11	s	METAL, CHIP 10K 5% 1/16W
R217	1-216-817-11	s	METAL, CHIP 470 5% 1/16W
R218	1-216-817-11	s	METAL, CHIP 470 5% 1/16W
R219	1-216-840-11	s	METAL, CHIP 39K 5% 1/16W

(VA-111 BOARD)

Ref. No. or Q'ty	Part No.	SP	Description
R220	1-216-817-11	s	METAL, CHIP 470 5% 1/16W
R225	1-216-821-11	s	METAL, CHIP 1K 5% 1/16W
R226	1-216-821-11	s	METAL, CHIP 1K 5% 1/16W
R227	1-216-821-11	s	METAL, CHIP 1K 5% 1/16W
R228	1-216-801-11	s	METAL, CHIP 22 5% 1/16W
R229	1-216-833-11	s	METAL, CHIP 10K 5% 1/16W
R230	1-216-830-11	s	METAL, CHIP 5.6K 5% 1/16W
R231	1-216-821-11	s	METAL, CHIP 1K 5% 1/16W
R232	1-216-821-11	s	METAL, CHIP 1K 5% 1/16W
R233	1-216-827-11	s	METAL, CHIP 3.3K 5% 1/16W
R234	1-216-825-11	s	METAL, CHIP 2.2K 5% 1/16W
R235	1-216-835-11	s	METAL, CHIP 15K 5% 1/16W
R236	1-216-840-11	s	METAL, CHIP 39K 5% 1/16W
R237	1-216-823-11	s	METAL, CHIP 1.5K 5% 1/16W
R238	1-216-805-11	s	METAL, CHIP 47 5% 1/16W
R239	1-216-837-11	s	METAL, CHIP 22K 5% 1/16W
R240	1-216-827-11	s	METAL, CHIP 3.3K 5% 1/16W
R241	1-216-805-11	s	METAL, CHIP 47 5% 1/16W
R242	1-216-805-11	s	METAL, CHIP 47 5% 1/16W
R243	1-216-805-11	s	METAL, CHIP 47 5% 1/16W
R244	1-216-837-11	s	METAL, CHIP 22K 5% 1/16W
R245	1-216-838-11	s	METAL, CHIP 27K 5% 1/16W
R246	1-218-289-11	s	METAL, CHIP 510 5% 1/16W
R247	1-216-820-11	s	METAL, CHIP 820 5% 1/16W
R248	1-216-821-11	s	METAL, CHIP 1K 5% 1/16W
R249	1-216-809-11	s	METAL, CHIP 100 5% 1/16W
R250	1-216-825-11	s	METAL, CHIP 2.2K 5% 1/16W
R251	1-218-289-11	s	METAL, CHIP 510 5% 1/16W
R252	1-216-837-11	s	METAL, CHIP 22K 5% 1/16W
R253	1-216-837-11	s	METAL, CHIP 22K 5% 1/16W
R254	1-216-827-11	s	METAL, CHIP 3.3K 5% 1/16W
R255	1-216-822-11	s	METAL, CHIP 1.2K 5% 1/16W
R256	1-216-817-11	s	METAL, CHIP 470 5% 1/16W
R257	1-216-821-11	s	METAL, CHIP 1K 5% 1/16W
R258	1-216-825-11	s	METAL, CHIP 2.2K 5% 1/16W
R259	1-216-826-11	s	METAL, CHIP 2.7K 5% 1/16W
R260	1-218-288-11	s	METAL, CHIP 300 5% 1/16W
R261	1-216-833-11	s	METAL, CHIP 10K 5% 1/16W
R262	1-216-821-11	s	METAL, CHIP 1K 5% 1/16W
R263	1-216-817-11	s	METAL, CHIP 470 5% 1/16W
R264	1-216-821-11	s	METAL, CHIP 1K 5% 1/16W
R265	1-216-833-11	s	METAL, CHIP 10K 5% 1/16W
R266	1-216-833-11	s	METAL, CHIP 10K 5% 1/16W
R267	1-216-830-11	s	METAL, CHIP 5.6K 5% 1/16W
R268	1-216-821-11	s	METAL, CHIP 1K 5% 1/16W
R269	1-216-833-11	s	METAL, CHIP 10K 5% 1/16W
R270	1-216-817-11	s	METAL, CHIP 470 5% 1/16W
R271	1-216-823-11	s	METAL, CHIP 1.5K 5% 1/16W
R272	1-216-821-11	s	METAL, CHIP 1K 5% 1/16W
R273	1-216-821-11	s	METAL, CHIP 1K 5% 1/16W
R274	1-216-833-11	s	METAL, CHIP 10K 5% 1/16W
R275	1-216-833-11	s	METAL, CHIP 10K 5% 1/16W
R276	1-216-830-11	s	METAL, CHIP 5.6K 5% 1/16W
R277	1-216-825-11	s	METAL, CHIP 2.2K 5% 1/16W
R278	1-216-837-11	s	METAL, CHIP 22K 5% 1/16W
R279	1-216-837-11	s	METAL, CHIP 22K 5% 1/16W
R280	1-216-833-11	s	METAL, CHIP 10K 5% 1/16W
R281	1-216-833-11	s	METAL, CHIP 10K 5% 1/16W
R282	1-216-833-11	s	METAL, CHIP 10K 5% 1/16W

(VA-111 BOARD)

Ref. No. or Q'ty	Part No.	SP	Description
R283	1-216-833-11	s	METAL, CHIP 10K 5% 1/16W
R284	1-216-809-11	s	METAL, CHIP 100 5% 1/16W
R286	1-218-285-11	s	METAL, CHIP 75 5% 1/16W
R287	1-216-837-11	s	METAL, CHIP 22K 5% 1/16W
R288	1-216-837-11	s	METAL, CHIP 22K 5% 1/16W
R289	1-216-825-11	s	METAL, CHIP 2.2K 5% 1/16W
R292	1-218-700-11	s	METAL, CHIP 2.2K 0.50% 1/16W
R293	1-216-829-11	s	METAL, CHIP 4.7K 5% 1/16W
R294	1-216-829-11	s	METAL, CHIP 4.7K 5% 1/16W
R295	1-216-857-11	s	METAL, CHIP 1M 5% 1/16W
R296	1-216-821-11	s	METAL, CHIP 1K 5% 1/16W
R297	1-216-825-11	s	METAL, CHIP 2.2K 5% 1/16W
R298	1-220-373-11	s	METAL, CHIP 62K 0.50% 1/16W
R299	1-216-828-11	s	METAL, CHIP 3.9K 5% 1/16W
R300	1-216-810-11	s	METAL, CHIP 120 5% 1/16W
R301	1-216-810-11	s	METAL, CHIP 120 5% 1/16W
R302	1-216-821-11	s	METAL, CHIP 1K 5% 1/16W
R303	1-216-821-11	s	METAL, CHIP 1K 5% 1/16W
R304	1-216-828-11	s	METAL, CHIP 3.9K 5% 1/16W
R305	1-216-821-11	s	METAL, CHIP 1K 5% 1/16W
R306	1-216-829-11	s	METAL, CHIP 4.7K 5% 1/16W
R307	1-216-840-11	s	METAL, CHIP 39K 5% 1/16W
R308	1-216-833-11	s	METAL, CHIP 10K 5% 1/16W
R309	1-216-841-11	s	METAL, CHIP 47K 5% 1/16W
R310	1-216-833-11	s	METAL, CHIP 10K 5% 1/16W
R311	1-216-821-11	s	METAL, CHIP 1K 5% 1/16W
R312	1-216-827-11	s	METAL, CHIP 3.3K 5% 1/16W
R313	1-216-829-11	s	METAL, CHIP 4.7K 5% 1/16W
R314	1-216-837-11	s	METAL, CHIP 22K 5% 1/16W
R315	1-216-837-11	s	METAL, CHIP 22K 5% 1/16W
R316	1-216-825-11	s	METAL, CHIP 2.2K 5% 1/16W
R317	1-216-833-11	s	METAL, CHIP 10K 5% 1/16W
R318	1-216-817-11	s	METAL, CHIP 470 5% 1/16W
R319	1-216-821-11	s	METAL, CHIP 1K 5% 1/16W
R320	1-216-821-11	s	METAL, CHIP 1K 5% 1/16W
R321	1-216-833-11	s	METAL, CHIP 10K 5% 1/16W
R322	1-216-833-11	s	METAL, CHIP 10K 5% 1/16W
R323	1-216-830-11	s	METAL, CHIP 5.6K 5% 1/16W
R324	1-216-826-11	s	METAL, CHIP 2.7K 5% 1/16W
R325	1-216-837-11	s	METAL, CHIP 22K 5% 1/16W
R326	1-216-837-11	s	METAL, CHIP 22K 5% 1/16W
R327	1-216-833-11	s	METAL, CHIP 10K 5% 1/16W
R328	1-216-833-11	s	METAL, CHIP 10K 5% 1/16W
R329	1-216-809-11	s	METAL, CHIP 100 5% 1/16W
R331	1-218-285-11	s	METAL, CHIP 75 5% 1/16W
R332	1-218-285-11	s	METAL, CHIP 75 5% 1/16W
R333	1-216-825-11	s	METAL, CHIP 2.2K 5% 1/16W
R334	1-216-827-11	s	METAL, CHIP 3.3K 5% 1/16W
R335	1-216-847-11	s	METAL, CHIP 150K 5% 1/16W
R336	1-216-834-11	s	METAL, CHIP 12K 5% 1/16W
R337	1-216-853-11	s	METAL, CHIP 470K 5% 1/16W
R338	1-216-825-11	s	METAL, CHIP 2.2K 5% 1/16W
R340	1-216-821-11	s	METAL, CHIP 1K 5% 1/16W
R341	1-216-841-11	s	METAL, CHIP 47K 5% 1/16W
R342	1-216-817-11	s	METAL, CHIP 470 5% 1/16W
R350	1-216-833-11	s	METAL, CHIP 10K 5% 1/16W
R351	1-216-841-11	s	METAL, CHIP 47K 5% 1/16W
R355	1-216-809-11	s	METAL, CHIP 100 5% 1/16W
R356	1-216-825-11	s	METAL, CHIP 2.2K 5% 1/16W

(VA-111 BOARD)

Ref. No. or Q'ty	Part No.	SP	Description
R357	1-216-841-11	s	METAL, CHIP 47K 5% 1/16W
R358	1-216-841-11	s	METAL, CHIP 47K 5% 1/16W
R359	1-214-838-00	s	METAL 82 1% 1/2W
R360	1-216-841-11	s	METAL, CHIP 47K 5% 1/16W
R361	1-216-841-11	s	METAL, CHIP 47K 5% 1/16W
R362	1-216-864-11	s	METAL, CHIP 0 5% 1/16W
R363	1-216-833-11	s	METAL, CHIP 10K 5% 1/16W
R364	1-216-826-11	s	METAL, CHIP 2.7K 5% 1/16W
R365	1-216-833-11	s	METAL, CHIP 10K 5% 1/16W
R366	1-216-838-11	s	METAL, CHIP 27K 5% 1/16W
R367	1-216-841-11	s	METAL, CHIP 47K 5% 1/16W
R368	1-216-825-11	s	METAL, CHIP 2.2K 5% 1/16W
R369	1-216-829-11	s	METAL, CHIP 4.7K 5% 1/16W
R370	1-216-821-11	s	METAL, CHIP 1K 5% 1/16W
R371	1-216-825-11	s	METAL, CHIP 2.2K 5% 1/16W
R372	1-216-833-11	s	METAL, CHIP 10K 5% 1/16W
R373	1-216-833-11	s	METAL, CHIP 10K 5% 1/16W
R374	1-216-838-11	s	METAL, CHIP 27K 5% 1/16W
R375	1-216-837-11	s	METAL, CHIP 22K 5% 1/16W
R376	1-216-817-11	s	METAL, CHIP 470 5% 1/16W
R377	1-216-817-11	s	METAL, CHIP 470 5% 1/16W
R378	1-216-834-11	s	METAL, CHIP 12K 5% 1/16W
R379	1-216-817-11	s	METAL, CHIP 470 5% 1/16W
R380	1-216-825-11	s	METAL, CHIP 2.2K 5% 1/16W
R382	1-216-833-11	s	METAL, CHIP 10K 5% 1/16W
R383	1-216-833-11	s	METAL, CHIP 10K 5% 1/16W
R384	1-216-837-11	s	METAL, CHIP 22K 5% 1/16W
R385	1-216-825-11	s	METAL, CHIP 2.2K 5% 1/16W
R386	1-216-817-11	s	METAL, CHIP 470 5% 1/16W
R387	1-216-817-11	s	METAL, CHIP 470 5% 1/16W
R388	1-216-834-11	s	METAL, CHIP 12K 5% 1/16W
R389	1-216-817-11	s	METAL, CHIP 470 5% 1/16W
R390	1-216-829-11	s	METAL, CHIP 4.7K 5% 1/16W
R801	1-216-833-11	s	METAL, CHIP 10K 5% 1/16W
R802	1-216-825-11	s	METAL, CHIP 2.2K 5% 1/16W
R803	1-216-821-11	s	METAL, CHIP 1K 5% 1/16W
R804	1-216-805-11	s	METAL, CHIP 47 5% 1/16W
R805	1-216-822-11	s	METAL, CHIP 1.2K 5% 1/16W
R806	1-218-484-11	s	METAL, CHIP 750 5% 1/16W
R807	1-216-825-11	s	METAL, CHIP 2.2K 5% 1/16W
R808	1-216-823-11	s	METAL, CHIP 1.5K 5% 1/16W
R809	1-216-823-11	s	METAL, CHIP 1.5K 5% 1/16W
R810	1-218-700-11	s	METAL, CHIP 2.2K 0.50% 1/16W
R811	1-218-700-11	s	METAL, CHIP 2.2K 0.50% 1/16W
R812	1-216-795-11	s	METAL, CHIP 6.8K 0.50% 1/16W
R813	1-216-825-11	s	METAL, CHIP 2.2K 5% 1/16W
R814	1-216-853-11	s	METAL, CHIP 470K 5% 1/16W
R815	1-216-821-11	s	METAL, CHIP 1K 5% 1/16W
R816	1-216-821-11	s	METAL, CHIP 1K 5% 1/16W
R817	1-216-836-11	s	METAL, CHIP 18K 5% 1/16W
R818	1-216-833-11	s	METAL, CHIP 10K 5% 1/16W
R819	1-216-809-11	s	METAL, CHIP 100 5% 1/16W
R820	1-216-864-11	s	METAL, CHIP 0 5% 1/16W
R821	1-216-842-11	s	METAL, CHIP 56K 5% 1/16W
R822	1-216-837-11	s	METAL, CHIP 22K 5% 1/16W
R823	1-216-818-11	s	METAL, CHIP 560 5% 1/16W
R824	1-216-809-11	s	METAL, CHIP 100 5% 1/16W
R825	1-216-809-11	s	METAL, CHIP 100 5% 1/16W
R826	1-216-809-11	s	METAL, CHIP 100 5% 1/16W

(VA-111 BOARD)

Ref. No. or Q'ty	Part No.	SP	Description
R827	1-218-285-11	s	METAL, CHIP 75 5% 1/16W
R828	1-216-808-11	s	METAL, CHIP 82 5% 1/16W
R829	1-216-809-11	s	METAL, CHIP 100 5% 1/16W
R830	1-216-833-11	s	METAL, CHIP 10K 5% 1/16W
R831	1-216-815-11	s	METAL, CHIP 330 5% 1/16W
R832	1-216-815-11	s	METAL, CHIP 330 5% 1/16W
R833	1-216-821-11	s	METAL, CHIP 1K 5% 1/16W
R834	1-216-819-11	s	METAL, CHIP 680 5% 1/16W
R835	1-218-697-11	s	METAL, CHIP 1.6K 0.50% 1/16W
R836	1-216-826-11	s	METAL, CHIP 2.7K 5% 1/16W
R837	1-216-825-11	s	METAL, CHIP 2.2K 5% 1/16W
R838	1-216-834-11	s	METAL, CHIP 12K 5% 1/16W
R839	1-216-830-11	s	METAL, CHIP 5.6K 5% 1/16W
R840	1-216-815-11	s	METAL, CHIP 330 5% 1/16W
R841	1-216-809-11	s	METAL, CHIP 100 5% 1/16W
R842	1-216-825-11	s	METAL, CHIP 2.2K 5% 1/16W
R843	1-216-805-11	s	METAL, CHIP 47 5% 1/16W
R844	1-218-714-11	s	METAL, CHIP 8.2K 0.50% 1/16W
R845	1-218-704-11	s	METAL, CHIP 3.3K 0.50% 1/16W
R846	1-216-813-11	s	METAL, CHIP 220 5% 1/16W
R847	1-216-813-11	s	METAL, CHIP 220 5% 1/16W
R848	1-216-864-11	s	METAL, CHIP 0 5% 1/16W
R849	1-216-821-11	s	METAL, CHIP 1K 5% 1/16W
R850	1-216-821-11	s	METAL, CHIP 1K 5% 1/16W
R851	1-216-813-11	s	METAL, CHIP 220 5% 1/16W
R852	1-216-816-11	s	METAL, CHIP 390 5% 1/16W
R853	1-216-817-11	s	METAL, CHIP 470 5% 1/16W
R854	1-216-809-11	s	METAL, CHIP 100 5% 1/16W
R855	1-216-855-11	s	METAL, CHIP 680K 5% 1/16W
R856	1-216-825-11	s	METAL, CHIP 2.2K 5% 1/16W
R858	1-218-482-11	s	METAL, CHIP 430 5% 1/16W
R860	1-216-809-11	s	METAL, CHIP 100 5% 1/16W
R861	1-216-833-11	s	METAL, CHIP 10K 5% 1/16W
R862	1-216-821-11	s	METAL, CHIP 1K 5% 1/16W
R863	1-216-815-11	s	METAL, CHIP 330 5% 1/16W
R864	1-216-821-11	s	METAL, CHIP 1K 5% 1/16W
R865	1-216-821-11	s	METAL, CHIP 1K 5% 1/16W
R866	1-216-821-11	s	METAL, CHIP 1K 5% 1/16W
R867	1-216-833-11	s	METAL, CHIP 10K 5% 1/16W
R868	1-216-825-11	s	METAL, CHIP 2.2K 5% 1/16W
R869	1-216-835-11	s	METAL, CHIP 15K 5% 1/16W
R870	1-216-833-11	s	METAL, CHIP 10K 5% 1/16W
R871	1-216-815-11	s	METAL, CHIP 330 5% 1/16W
R872	1-216-821-11	s	METAL, CHIP 1K 5% 1/16W
R873	1-216-821-11	s	METAL, CHIP 1K 5% 1/16W
R874	1-216-817-11	s	METAL, CHIP 470 5% 1/16W
R875	1-216-809-11	s	METAL, CHIP 100 5% 1/16W
R876	1-216-821-11	s	METAL, CHIP 1K 5% 1/16W
R877	1-216-805-11	s	METAL, CHIP 47 5% 1/16W
R878	1-216-795-11	s	METAL, CHIP 6.8K 0.50% 1/16W
R879	1-218-708-11	s	METAL, CHIP 4.7K 0.50% 1/16W
R880	1-218-708-11	s	METAL, CHIP 4.7K 0.50% 1/16W
R881	1-216-825-11	s	METAL, CHIP 2.2K 5% 1/16W
R882	1-216-821-11	s	METAL, CHIP 1K 5% 1/16W
R883	1-216-821-11	s	METAL, CHIP 1K 5% 1/16W
R884	1-218-677-11	s	METAL, CHIP 240 0.50% 1/16W
R885	1-218-345-11	s	METAL, CHIP 9.1K 5% 1/16W
R886	1-218-457-11	s	METAL, CHIP 910 5% 1/16W
R887	1-216-820-11	s	METAL, CHIP 820 5% 1/16W

(VA-111 BOARD)

Ref. No. or Q'ty	Part No.	SP	Description
R888	1-216-813-11	s	METAL, CHIP 220 5% 1/16W
R889	1-216-837-11	s	METAL, CHIP 22K 5% 1/16W
R890	1-216-813-11	s	METAL, CHIP 220 5% 1/16W
R891	1-218-708-11	s	METAL, CHIP 4.7K 0.50% 1/16W
R892	1-216-816-11	s	METAL, CHIP 390 5% 1/16W
R893	1-218-661-11	s	METAL, CHIP 51 0.50% 1/16W
R894	1-218-661-11	s	METAL, CHIP 51 0.50% 1/16W
R895	1-216-821-11	s	METAL, CHIP 1K 5% 1/16W
R896	1-216-821-11	s	METAL, CHIP 1K 5% 1/16W
R897	1-216-821-11	s	METAL, CHIP 1K 5% 1/16W
R898	1-216-821-11	s	METAL, CHIP 1K 5% 1/16W
R899	1-216-821-11	s	METAL, CHIP 1K 5% 1/16W
R900	1-216-813-11	s	METAL, CHIP 220 5% 1/16W
R901	1-216-821-11	s	METAL, CHIP 1K 5% 1/16W
R902	1-216-833-11	s	METAL, CHIP 10K 5% 1/16W
R903	1-216-834-11	s	METAL, CHIP 12K 5% 1/16W
R904	1-216-833-11	s	METAL, CHIP 10K 5% 1/16W
RV101	1-238-799-11	s	RES, ADJ METAL 1K
RV102	1-238-799-11	s	RES, ADJ METAL 1K
RV103	1-238-799-11	s	RES, ADJ METAL 1K
RV104	1-238-800-11	s	RES, ADJ METAL 2K
RV105	1-238-799-11	s	RES, ADJ METAL 1K
RV106	1-238-799-11	s	RES, ADJ METAL 1K
RV107	1-238-798-11	s	RES, ADJ METAL 500
RV108	1-238-799-11	s	RES, ADJ METAL 1K
RV109	1-238-799-11	s	RES, ADJ METAL 1K
RV110	1-238-801-11	s	RES, ADJ METAL 5K
RV111	1-238-799-11	s	RES, ADJ METAL 1K
RV802	1-238-802-11	s	RES, ADJ METAL 10K
RV803	1-238-798-11	s	RES, ADJ METAL 500
RV805	1-238-802-11	s	RES, ADJ METAL 10K
RV806	1-238-798-11	s	RES, ADJ METAL 500
RV807	1-238-797-11	s	RES, ADJ METAL 200
RV808	1-238-797-11	s	RES, ADJ METAL 200
S101	1-570-622-11	s	SWITCH, DIP 7-CKT
S102	1-570-622-11	s	SWITCH, DIP 7-CKT
X101	1-527-377-00	s	CRYSTAL 4.267919MHz

VR-122 BOARD

Ref. No. or Q'ty	Part No.	SP	Description
1pc	1-642-873-11	o	PRINTED CIRCUIT BOARD, VR-122
CN245	1-506-477-11	s	CONNECTOR 12P, MALE
RV1	1-237-790-21	s	RES, VAR CARBON 10K
RV2	1-237-790-21	s	RES, VAR CARBON 10K
RV3	1-237-790-21	s	RES, VAR CARBON 10K
RV4	1-237-790-21	s	RES, VAR CARBON 10K

VR-130 BOARD

Ref. No. or Q'ty	Part No.	SP	Description
1pc	1-642-874-11	o	PRINTED CIRCUIT BOARD, VR-130
C1	1-162-970-11	s	CERAMIC, CHIP 0.01uF 10% 25V
CN242	1-506-482-11	s	CONNECTOR 3P, MALE
R1	1-216-033-00	s	METAL, CHIP 220 5% 1/10W
R2	1-216-033-00	s	METAL, CHIP 220 5% 1/10W
R3	1-216-033-00	s	METAL, CHIP 220 5% 1/10W
R4	1-216-033-00	s	METAL, CHIP 220 5% 1/10W
R5	1-216-033-00	s	METAL, CHIP 220 5% 1/10W
R6	1-216-033-00	s	METAL, CHIP 220 5% 1/10W
R7	1-216-033-00	s	METAL, CHIP 220 5% 1/10W
R8	1-216-033-00	s	METAL, CHIP 220 5% 1/10W
RV1	1-237-703-11	s	RES, VAR CARBON 2Kx2

VRA-4 BOARD

Ref. No. or Q'ty	Part No.	SP	Description
1pc	A-8271-232-A	o	MOUNTED CIRCUIT BOARD, VRA-4
1pc	3-947-136-01	o	PLATE, SHIELD, RF
1pc	7-682-903-01	s	SCREW +PWH 3X5
C1	1-162-970-11	s	CERAMIC, CHIP 0.01uF 10% 25V
C2	1-162-970-11	s	CERAMIC, CHIP 0.01uF 10% 25V
C3	1-162-970-11	s	CERAMIC, CHIP 0.01uF 10% 25V
C4	1-163-035-00	s	CERAMIC, CHIP 0.047uF 50V
C5	1-163-035-00	s	CERAMIC, CHIP 0.047uF 50V
C6	1-162-970-11	s	CERAMIC, CHIP 0.01uF 10% 25V
C7	1-162-970-11	s	CERAMIC, CHIP 0.01uF 10% 25V
C8	1-162-913-11	s	CERAMIC 8PF 50V
C9	1-162-913-11	s	CERAMIC 8PF 50V
C10	1-162-970-11	s	CERAMIC, CHIP 0.01uF 10% 25V
C11	1-162-970-11	s	CERAMIC, CHIP 0.01uF 10% 25V
C12	1-128-131-11	s	ELECT 22uF 20% 50V
C13	1-162-970-11	s	CERAMIC, CHIP 0.01uF 10% 25V
C14	1-163-038-00	s	CERAMIC, CHIP 0.1uF 25V
C15	1-124-472-11	s	ELECT 470uF 20% 10V
C16	1-162-970-11	s	CERAMIC, CHIP 0.01uF 10% 25V
C17	1-162-970-11	s	CERAMIC, CHIP 0.01uF 10% 25V
C18	1-162-970-11	s	CERAMIC, CHIP 0.01uF 10% 25V
C19	1-126-160-11	s	ELECT 1uF 20% 50V
C20	1-162-970-11	s	CERAMIC, CHIP 0.01uF 10% 25V
C21	1-162-970-11	s	CERAMIC, CHIP 0.01uF 10% 25V
C22	1-162-970-11	s	CERAMIC, CHIP 0.01uF 10% 25V
C23	1-162-970-11	s	CERAMIC, CHIP 0.01uF 10% 25V
C24	1-128-131-11	s	ELECT 22uF 20% 50V
C25	1-162-970-11	s	CERAMIC, CHIP 0.01uF 10% 25V
C26	1-162-970-11	s	CERAMIC, CHIP 0.01uF 10% 25V
C27	1-162-923-11	s	CERAMIC, CHIP 47PF 5% 50V
C28	1-162-925-11	s	CERAMIC, CHIP 68PF 5% 50V
C29	1-162-922-11	s	CERAMIC, CHIP 39PF 5% 50V
C32	1-162-970-11	s	CERAMIC, CHIP 0.01uF 10% 25V
C34	1-128-131-11	s	ELECT 22uF 20% 50V
C35	1-162-970-11	s	CERAMIC, CHIP 0.01uF 10% 25V
C37	1-162-970-11	s	CERAMIC, CHIP 0.01uF 10% 25V
C38	1-163-038-00	s	CERAMIC, CHIP 0.1uF 25V
C39	1-162-968-11	s	CERAMIC, CHIP 0.0047uF 10% 50V
C40	1-124-584-00	s	ELECT 100uF 20% 10V
C41	1-126-154-11	s	ELECT 47uF 20% 6.3V
CN501	1-506-480-11	o	CONNECTOR, 15P, MALE
CN502	1-566-764-11	o	CONNECTOR 9P, MALE
CN503	1-506-470-11	s	CONNECTOR 5P, MALE
CN504	1-506-473-11	s	CONNECTOR 8P, MALE
D2	8-719-400-18	s	DIODE MA152WK
IC1	8-752-033-00	s	IC CXA1234AR
IC3	8-759-230-99	s	IC TC74HC4053AF
IC4	8-759-230-99	s	IC TC74HC4053AF
L1	1-410-478-11	s	INDUCTOR 47uH
L2	1-410-484-11	s	INDUCTOR 150UH
L3	1-408-785-21	s	INDUCTOR, CHIP 47UH
L4	1-410-376-21	s	INDUCTOR, CHIP 3.9uH
L5	1-408-785-21	s	INDUCTOR, CHIP 47UH
L6	1-410-381-11	s	INDUCTOR, CHIP 10UH
L7	1-408-785-21	s	INDUCTOR, CHIP 47UH
L8	1-408-785-21	s	INDUCTOR, CHIP 47UH

(VRA-4 BOARD)

Ref. No. or Q'ty	Part No.	SP	Description
Q1	8-729-905-18	s	TRANSISTOR DTC144EU
Q2	8-729-216-22	s	TRANSISTOR 2SA1162
Q3	8-729-120-28	s	TRANSISTOR 2SC1623-L5L6
Q4	8-729-119-76	s	TRANSISTOR 2SA1115P
Q5	8-729-216-22	s	TRANSISTOR 2SA1162
Q6	8-729-905-18	s	TRANSISTOR DTC144EU
Q7	8-729-905-18	s	TRANSISTOR DTC144EU
Q8	8-729-216-22	s	TRANSISTOR 2SA1162
R1	1-216-829-11	s	METAL, CHIP 4.7K 5% 1/16W
R2	1-216-829-11	s	METAL, CHIP 4.7K 5% 1/16W
R3	1-216-829-11	s	METAL, CHIP 4.7K 5% 1/16W
R4	1-216-829-11	s	METAL, CHIP 4.7K 5% 1/16W
R5	1-216-824-11	s	METAL, CHIP 1.8K 5% 1/16W
R6	1-216-824-11	s	METAL, CHIP 1.8K 5% 1/16W
R7	1-218-698-11	s	METAL, CHIP 1.8K 0.50% 1/16W
R8	1-218-698-11	s	METAL, CHIP 1.8K 0.50% 1/16W
R9	1-218-720-11	s	METAL, CHIP 15K 0.50% 1/16W
R10	1-218-724-11	s	METAL, CHIP 22K 0.50% 1/16W
R11	1-218-720-11	s	METAL, CHIP 15K 0.50% 1/16W
R12	1-218-725-11	s	METAL, CHIP 24K 0.50% 1/16W
R13	1-216-837-11	s	METAL, CHIP 22K 5% 1/16W
R14	1-216-839-11	s	METAL, CHIP 33K 5% 1/16W
R19	1-216-817-11	s	METAL, CHIP 470 5% 1/16W
R20	1-216-831-11	s	METAL, CHIP 6.8K 5% 1/16W
R21	1-216-833-11	s	METAL, CHIP 10K 5% 1/16W
R22	1-216-803-11	s	METAL, CHIP 33 5% 1/16W
R23	1-216-797-11	s	METAL, CHIP 10 5% 1/16W
R24	1-216-818-11	s	METAL, CHIP 560 5% 1/16W
R25	1-216-837-11	s	METAL, CHIP 22K 5% 1/16W
R26	1-216-825-11	s	METAL, CHIP 2.2K 5% 1/16W
R27	1-216-837-11	s	METAL, CHIP 22K 5% 1/16W
R28	1-216-841-11	s	METAL, CHIP 47K 5% 1/16W
R29	1-216-841-11	s	METAL, CHIP 47K 5% 1/16W
R30	1-216-837-11	s	METAL, CHIP 22K 5% 1/16W
R31	1-216-797-11	s	METAL, CHIP 10 5% 1/16W
R32	1-216-797-11	s	METAL, CHIP 10 5% 1/16W
R33	1-216-821-11	s	METAL, CHIP 1K 5% 1/16W
R34	1-216-821-11	s	METAL, CHIP 1K 5% 1/16W
R35	1-216-843-11	s	METAL, CHIP 68K 5% 1/16W
R36	1-216-827-11	s	METAL, CHIP 3.3K 5% 1/16W
R37	1-216-864-11	s	METAL, CHIP 0 5% 1/16W
R39	1-218-744-11	s	METAL, CHIP 150K 0.50% 1/16W
R40	1-218-744-11	s	METAL, CHIP 150K 0.50% 1/16W
R41	1-218-700-11	s	METAL, CHIP 2.2K 0.50% 1/16W
R42	1-218-700-11	s	METAL, CHIP 2.2K 0.50% 1/16W
R43	1-216-801-11	s	METAL, CHIP 22 5% 1/16W
RV1	1-238-783-11	s	RES, ADJ, CERMET 500
RV2	1-238-786-11	s	RES, ADJ METAL 5K
RV3	1-238-786-11	s	RES, ADJ METAL 5K

FRAME

Ref. No. or Q'ty	Part No.	SP	Description
1pc	A-7048-575-A	s	DRUM ASSY (DGH-97A-R)
1pc	A-7049-513-A	s	DRUM ASSY, UPPER ROTARY (DGR-97-R)
1pc	A-7070-624-A	o	MOUNTED CIRCUIT BOARD, FP-84 FLEXIBLE (CN-551/CN345 to MD ASSY/W801)
1pc	A-7070-625-A	o	MOUNTED CIRCUIT BOARD, FP-122 FLEXIBLE (CN-551/CN344 to MD ASSY/W901)
1pc	⚠1-413-731-11	s	SWITCHING REGULATOR (SOPS-1030)
1pc	1-506-485-11	s	CONNECTOR (HOOK TYPE) (to LM-22 BOARD)
1pc	1-506-485-11	s	CONNECTOR (HOOK TYPE) (to MS-36 BOARD)
1pc	⚠1-532-743-11	s	FUSE GRASS TUBE
1pc	1-535-535-11	s	TERMINAL, SHAFT GROUND
1pc	1-543-830-11	o	CLAMP, SLEEVE FERRITE
1pc	1-630-923-11	o	FLEXIBLE BOARD, FP-206 (MD ASSY to RS-31/CN304)
5pcs	1-696-147-11	s	FLEXIBLE CARD WIRE 26P (SST-2/CN311 THRU CN315) to (MB-356/CN130 THRU CN314)
1pc	1-949-739-11	o	HARNESS (KY-DD1) (KY-217/CN703 to DD-12/CN752)
1pc	1-949-740-11	o	HARNESS (KY-DD2) (KY-217/CN704 to DD-12/CN751)
1pc	1-949-741-11	o	HARNESS (AU) (AU-156/CN221,CN222) to (AA-57/CN205,CN208)
1pc	1-949-742-11	o	HARNESS (MB) (MB-356/CN119,CN121,CN122, CN123,CN329) to (VR-122/CN245, VR-130/CN242, MT-57A/CN802 & SW-466/CN244)
1pc	1-949-743-11	o	HARNESS (SW467) (MB-356/CN124,CN135,CN136) to (SW-467/CN246 THRU CN249 & SST-2/CN307)
1pc	1-949-748-11	o	HARNESS (SST) (SST-2/CN322 THRU CN328) to (CN-551/CN335 THRU CN340 & CN348)
1pc	1-949-749-12	o	HARNESS (AA) (AA-57/CN201 THRU CN204,CN206 CN206,CN207,CN209,CN210) to (CP-177/CN211 THRU CN218)
1pc	1-949-751-11	o	HARNESS (RM101) (RM-101/CN241 to MB-356/CN113)

(FRAME)

Ref. No. or Q'ty	Part No.	SP	Description
1pc	1-949-752-11	o	HARNESS (AU-MON) (MB-356/CN1145 to CP-176/CN231)
1pc	1-949-753-11	o	HARNESS (DUB) (MB-356/CN115 to CP-176/CN232)
1pc	1-949-755-12	o	HARNESS (MONITOR) (MB-356/CN117 to CP-176/CN234)
1pc	1-949-756-12	o	HARNESS (S-V) (MB-356/CN118 to CP-176/CN235)
1pc	1-949-757-11	o	HARNESS (RM-122) (RM-122/CN252 to SST-2/CN316)
1pc	1-949-758-11	o	HARNESS (VRA-SI) (MB-356/CN128 to VRA-4/CN501)
1pc	1-949-759-11	o	HARNESS (VRA-DC) (MB-356/CN129 to VRA-4/CN503)
1pc	1-949-760-11	o	HARNESS (PRE) (MB-356/CN127 to PRE-10/CN511)
1pc	1-949-761-11	o	HARNESS (SDW348) (MB-356/CN125 to SW-543/CN810)
1pc	1-949-762-11	o	HARNESS (KY-SST) (KY-217/CN701 to SST-2/CN329)
1pc	1-949-763-11	o	HARNESS (TR) (CN-551/CN346 to TR-72/CN351)
CN126	(to MB-356)		
	1-562-256-00	o	HOUSING 6P
	1-562-260-11	o	CONTACT, IL-S FEMALE AWG 24-28
CN137	(to MB-356)		
	1-562-257-00	o	HOUSING 8P
	1-562-260-11	o	CONTACT, IL-S FEMALE AWG 24-28
CN242	(to HP-52)		
	1-506-482-11	s	HOUSING 3P
	1-563-088-11	o	CONTACT, FEMALE AWG24-30
CN243	(to SW-540)		
	1-562-148-11	o	HOUSING 3P
	1-563-088-11	o	CONTACT, FEMALE AWG24-30
CN261	(to DC-57)		
	1-562-259-00	o	HOUSING 12P
	1-562-260-11	o	CONTACT, IL-S FELAME AWG24-28
CN262	(to DC-57)		
	1-562-254-00	o	HOUSING 4P
	1-562-260-11	o	CONTACT, IL-S FELAME AWG24-28
CN263	(to DC-57)		
	1-562-256-00	o	HOUSING 6P
	1-562-260-11	o	CONTACT, IL-S FEMALE AWG24-28
CN264	(to DC-57)		
	1-562-257-00	o	HOUSING 8P
	1-562-260-11	o	CONTACT, IL-S FEMALE AWG24-28
CN265	(to DC-57)		
	1-562-258-00	o	HOUSING 10P
	1-562-260-11	o	CONTACT, IL-S FEMALE AWG24-28

(FRAME)

Ref. No. or Q'ty	Part No.	SP	Description
CN309	(to SST-2)		
	1-506-482-11	s	HOUSING 3P
	1-563-088-11	o	CONTACT, FEMALE AWG24-30
CN321	(to SST-2)		
	1-562-258-00	o	HOUSING 10P
	1-562-260-11	o	CONTACT, IL-S FEMALE AWG24-28
CN331	(to CN-551)		
	1-562-147-11	o	HOUSING 2P
	1-563-088-11	o	CONTACT, FEMALE AWG 24-30
CN332	(to CN-551)		
	1-562-149-11	o	HOUSING 4P
	1-563-088-11	o	CONTACT, FEMALE AWG 24-30
CN333	(to CN-551)		
	1-562-150-11	o	HOUSING 5P
	1-563-088-11	o	CONTACT, FEMALE AWG 24-30
CN334	(to CN-551)		
	1-562-147-11	o	HOUSING 2P
	1-563-088-11	o	CONTACT, FEMALE AWG 24-30
CN341	(to CN-551)		
	1-562-149-11	o	HOUSING 4P
	1-563-088-11	o	CONTACT, FEMALE AWG 24-30
CN342	(to CN-551)		
	1-562-149-11	o	HOUSING 4P
	1-563-088-11	o	CONTACT, FEMALE AWG 24-30
CN347	(to CN-551)		
	1-562-147-11	o	HOUSING 2P
	1-563-088-11	o	CONTACT, FEMALE AWG 24-30
CN702	(to KY-217)		
	1-562-151-00	o	HOUSING 6P
	1-564-026-00	s	CONTACT, FEMALE AWG24-30
CN706	(to KY-217)		
	1-562-152-11	o	HOUSING 7P
	1-564-026-00	s	CONTACT, FEMALE AWG24-30
CN766	(to LP-52)		
	1-562-152-11	o	HOUSING 7P
	1-564-026-00	s	CONTACT, FEMALE AWG24-30
CN901	(to SWITCHING REGULATOR)		
	1-562-259-00	o	HOUSING 12P
	1-562-260-11	o	CONTACT, IL-S FEMALE AWG24-28
CN902	(to SWITCHING REGULATOR)		
	1-562-285-11	o	HOUSING 4P
	1-562-210-11	o	CONTACT, FEMALE AWG18-22
CN911	(to AC-121)		
	⚠1-562-285-00	o	HOUSING 4P
	⚠1-562-210-11	o	CONTACT, FEMALE AWG18-22
CN912	(to AC-121)		
	⚠1-562-211-11	o	HOUSING 3P
	⚠1-562-210-11	o	CONTACT, FEMALE AWG18-22
CN2002	(to SWITCHING REGULATOR)		
	1-562-254-00	o	HOUSING 4P
	1-562-260-11	o	CONTACT, IL-S FELAME AWG24-28
CN3001	⚠1-580-375-11	S	INLET 3P "AC IN"

(FRAME)

Ref. No. or Q'ty	Part No.	SP	Description
CS1001	1-806-682-00	s	SENSOR, CONDENSATION
J1002	1-507-854-00	s	JACK, HEADPHONES
M1002	8-835-304-11	s	MOTOR, DC (U-11B) "REEL"
M1003	8-835-364-01	s	MOTOR, DC (BHF-2802B) "CAPSTAN"
M1004	X-3711-936-1	s	MOTOR ASSY, FL (DNR-6603A) "CASSETTE COMPARTMENT"
M1005	8-835-138-01	s	MOTOR, DC (DNR-5301B) "CONTROL"
M1006	A-7040-065-A	s	MOTOR ASSY, L (DNR-6602A) "LOADING"
ME1001	1-520-506-11	s	METER AUDIO LEVEL CH-1
ME1002	1-520-506-11	s	METER AUDIO LEVEL CH-2
PM1001	1-454-377-21	s	SOLENOID "BRAKE"
PM1002	1-454-445-21	s	SOLENOID "CLEANING"
S1001	⚠1-570-117-41	s	SWITCH, ROCKER "POWER"
S1002	1-570-407-11	s	SWITCH SLIDE " CASSETTE IN"
S1003	1-553-226-00	s	SWITCH LEAF "CASSETTE DOWN"
S1010	1-572-298-21	s	SWITCH, PUSH "REC PROOF/MPHG/ME/MP"

14-4. PACKING MATERIALS AND ACCESSORIES

Ref. No. or Q'ty	Part No.	SP	Description
1pc	⚠1-534-754-00	s	CORD, POWER (for J)
1pc	⚠1-557-377-11	s	CORD, POWER (for UC)
1pc	3-176-268-01	o	CUSHION (UPPER)
1pc	3-176-269-01	o	CUSHION (LOWER)
1pc	3-694-922-01	o	SHEET, PROTECTION
1pc	3-754-736-01	s	MANUAL, INSTRUCTION (for J)
1pc	⚠3-754-736-21	s	MANUAL, INSTRUCTION (for UC)
1pc	3-795-581-21	o	SAFEGUARD(SONY), IMPORTANT (for UC)

14-5. OPTIONAL FIXTURES

Ref. No. or Q'ty	Part No.	SP	Description
	Y-2031-001-1	o	CLEANING FLUID
	J-6080-840-A	o	SMALL ADJUSTMENT MIRROR
	J-6080-827-A	o	DIAL TENSION GAUGE
	J-6080-831-A	o	TENSION MEASUREMENT REEL
	J-6080-832-A	o	TENSION MEASUREMENT REEL
	J-6257-610-A	o	No.10 GEAR PHASE TOOL
	J-6080-826-A	o	No.6 GUIDE LOCK SCREWDRIVER
	J-6257-460-A	o	UPPER DRUM REPLACEMENT TOOL
	J-6080-824-A	o	FWD, REV TAKE UP TORQUE CASSETTE
	J-6080-825-A	o	MODE SELECTOR
	J-6269-000-A	o	REC HEAD PB HARNESS
	J-6080-883-A	o	RF/SWP CONNECTOR
	J-6257-560-A	o	S-TENSION ADJUSTMENT TOOL
	J-6268-660-A	o	EX-311 (EXTENSION BOARD)
	J-6080-891-A	o	TRACK SHIFT TOOL
	3-703-375-06	o	PARALLEL PIN
	7-700-766-01	o	HEXAGONAL SCREWDRIVER
	7-741-900-53	o	WIPING CLOTH
	8-967-992-12	o	ALIGNMENT TAPE, WR2-3NS
	8-967-995-02	o	ALIGNMENT TAPE, WR5-1NP
	8-967-995-12	o	ALIGNMENT TAPE, WR5-6N
	8-967-995-13	o	ALIGNMENT TAPE, WR5-7NE
	8-967-995-42	o	ALIGNMENT TAPE, WR5-5NSP
	8-967-995-43	o	ALIGNMENT TAPE, WR5-8NSE
	8-967-995-52	o	ALIGNMENT TAPE, WR5-8NLE
COMMERCIALLY SOLD			HEAD DEGAUSSER